FläktGroup

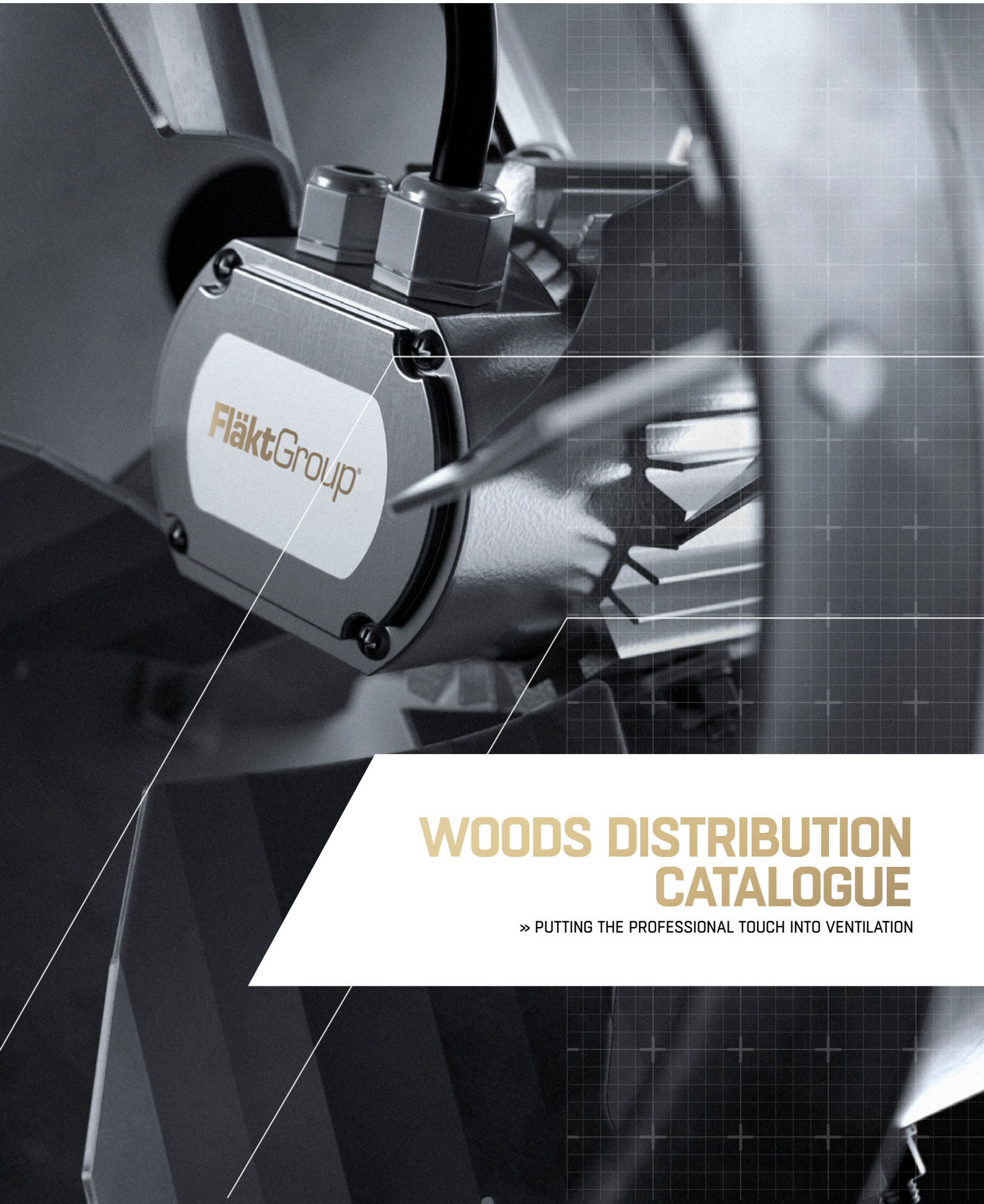

WOODS DISTRIBUTION CATALOGUE

» PUTTING THE PROFESSIONAL TOUCH INTO VENTILATION

EXCELLENCE
IN SOLUTIONS

AIRTREND Ltd.
Predstavništvo u Beogradu
Kumanovska 14, 11000 Beograd
Tel: 011/3836886, 3085740
Faks: 011/3444113
e-mail: gobrid@eunet.rs
web: www.airtrend.rs

THE WOODS RANGE

FOR ALL YOUR **VENTILATION** NEEDS

- Over 100 years of experience in ventilation
- From the name you can trust
- Providing high quality products
- State of the art manufacturing facilities
- Extensive range of products
- Technical expertise
- Wide stock available for next day delivery
- British design and manufacture

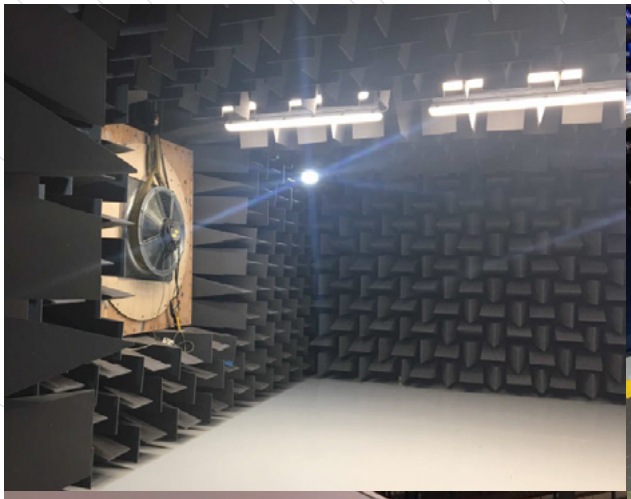

CONTENTS

CONTENTS

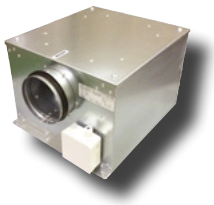

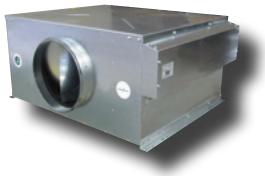

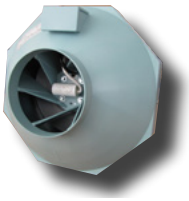

CONTENTS

Application Support:
Kitchen Supply / Extract Fans

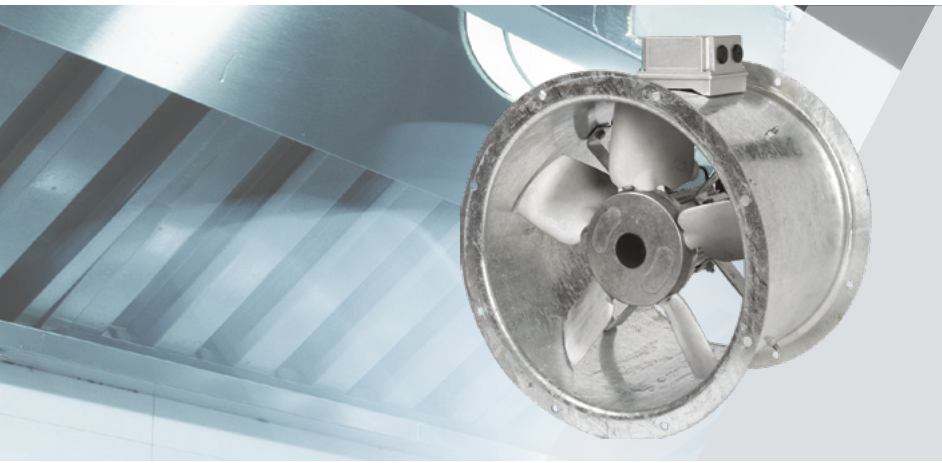

JM AEROFOIL

The highest air volumes/performance in its class suitable for low to medium pressures, 2 pole and 2 stage variants available for high pressures. Suitable for both internal and external installation as standard, manufactured using mild steel and hot dipped galvanised finish to give high resistance to corrosion, suitable for speed control for on demand ventilation, easy installation & maintenance.

PLATE FANS

Our JM Platemounted fan features an aluminium adjustable fixed pitch impeller manufactured for greater performance. Available in sizes 315 to 1000mm in diameter it is suitable where low pressures and high air volumes are required.

MAXFAN²

Our high pressure MaXfan is suitable for both Internal and external Installation, manufactured using mild steel and hot dipped galvanised finish to give high resistance to corrosion, suitable for speed control, easy Installation & maintenance.

ESTOC TARGE

The Estoc Targe is available in the same range of sizes as the ePowerBox, and covers duties up to 5.8m³/s flow rate and 1450Pa. Available in both AC or EC in 230v single phase or 400v three phase dependant on unit size.

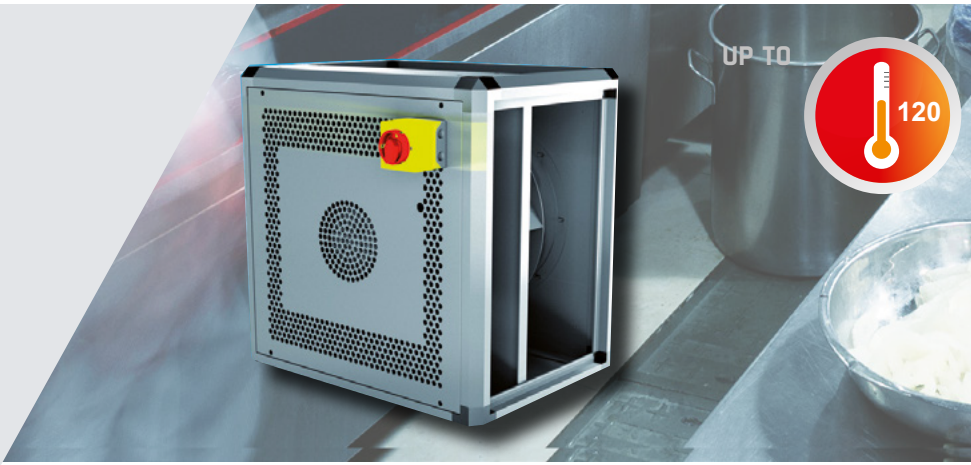

EXTRACT AND SUPPLY SOLUTIONS OPTIMISING VENTILATION FOR COMMERCIAL KITCHEN APPLICATIONS

Whether your requirement is for a small takeaway shop or a large restaurant Woods have the solution within our extensive portfolio of supply & extract fans. We understand the importance of ventilation systems for a safe and comfortable kitchen environment which is why our solutions incorporate a variety of features inluding **removal of day to day smells, smoke extract, high temperature operation, fully speed controllable, option with the motor located out of air stream.** All with a robust and reliable construction.

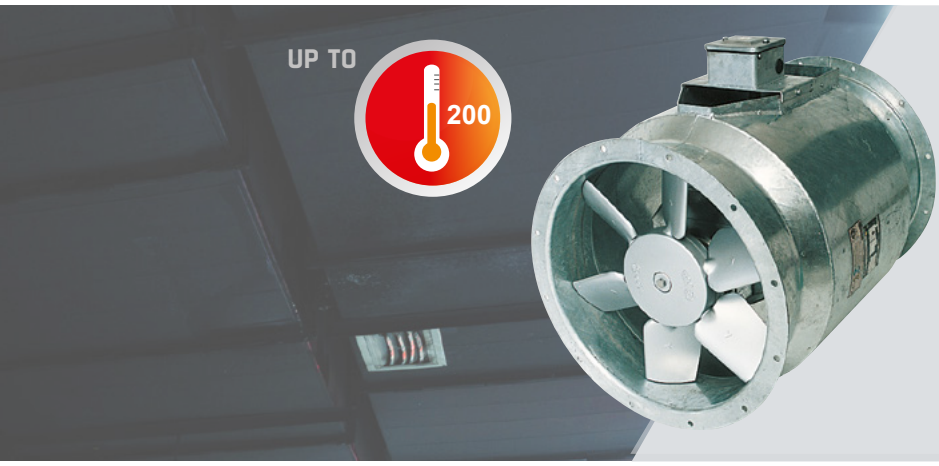

JM BIFURCATED

High quality fan designed to withstand continuous hot temperatures and with a protected motor that does not get exposed to any particles within the airstream. The bifurcated fan can withtand continous temperatures of 200°C, ideal for solid fuel cooking applications. Available in both 230V single phase and 400V three phase dependant on unit size.

KATANA EC

Our highly adaptable kitchen extract and supply box unit offering an efficient performance and highly reliable robust construction. Available in six standard sizes covering a flow range up to 3.3 m^3/s and system pressures up to 877Pa.

MAXFAN COMPAC

The MaXfan Compac has been designed for kitchen canopy systems fan offers you high performance, full inverter control, operating temperature up to 80°C dependant on fan size, easy installation & maintenance, compact robust lightweight design. Available in a range of sizes from 315 - 630mm.

ePOWERBOX

Suitable for medium to higher air flow volumes against high pressures in ventilation systems, speed is 100% infinitely variable, low noise levels with acoustic insulation, manufactured using galvanised sheet steel. Can be installed in axial orientation or any 90° discharge.

CASED AXIAL
JM AEROFOIL

PRODUCT FACTS

- Air flow up to 20.9 m^3/s
- Static pressures up to 1100 Pa
- Fans tested to ISO5801 and BS848
- High energy efficiency
- Low installed noise levels
- Motor protection and terminal block IP55
- Larger sizes available please enquire for more information

ELECTRICAL SUPPLY

220-240V/50Hz/1ϕ & 380-420V/50Hz/3ϕ

TEMPERATURE RANGE

-40°C to 50°C as standard. 50°C to 70°C must be run at full speed only.

SIZES

315, 355, 400, 450, 500, 560, 630, 710, 800, 900 & 1000 mm

IMPELLERS

A unique high efficiency aerofoil section blade with a smoothed hub and clamp plate for adjustable pitch angle availability.

Woods impellers are all high pressure die cast to offer thin aerofoil sections for low generation of noise. Every cast aluminium component is X-ray examined using Real Time Radiography inspection prior to assembly. The maximum pitch angles shown allow for speed control by frequency inverter (3ph only).

MOTORS

All motors are totally enclosed air stream rated class F insulation. Constructed from aluminium or cast iron as standard with special 'T' slot, or pad mounted fixings. Single speed motors are suitable for speed control by voltage regulation where indicated. Three phase motors are suitable for use with frequency inverters, suitable for turn down to 20% of maximum speed. Two speed motors are available on request. Suitable for horizontal or vertical shaft operation. Supplied IP55, with removable drain plugs.

Sealed for life bearings lubricated with wide temperature range grease. The BT and CT frames are fitted with overheat protection thermostat as standard. 80-160 frame motors are fitted with Thermistor OHP. These motors are suitable for inverter/speed control down to 20% of full speed and where within scope incorporate IE2 compliant motors.

CASING

JM Aerofoil fans are available in either a long cased form, complete with an externally mounted pre-wired electrical terminal box, or short cased for duct or plate installation. Casings are spun from sheet steel with integral pre-drilled and radiused inlet flanges. The galvanised finish gives a high resistance to corrosion and is ideal for external as well as internal use.

PRODUCT CODE

63JM/20/4/6/36

- 63 - denotes the fan impeller diameter in centimetres
- JM - denotes fan type
- 20 - denotes impeller hub diameter in centimetres
- 4 - denotes a nominal 4 pole speed
- 6 - denotes the number of blades
- 36 - denotes the pitch angle for the required duty

ACCESSORIES (Pages 230-237) - CONTROLLERS (Pages 249-297)


Damper

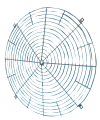
Guard


Bellmouth


Flange


Mounting Feet


Rubber AV's


Acoustic Jacket


Flexible Connector


Silencer


Controls Transformer


Controls Electronic


Controls Inverter

JM AEROFOIL PERFORMANCE AND ELECTRICAL DATA

220-240V/50HZ/1ϕ - L TYPE

PERFORMANCE CHART - 315-630MM

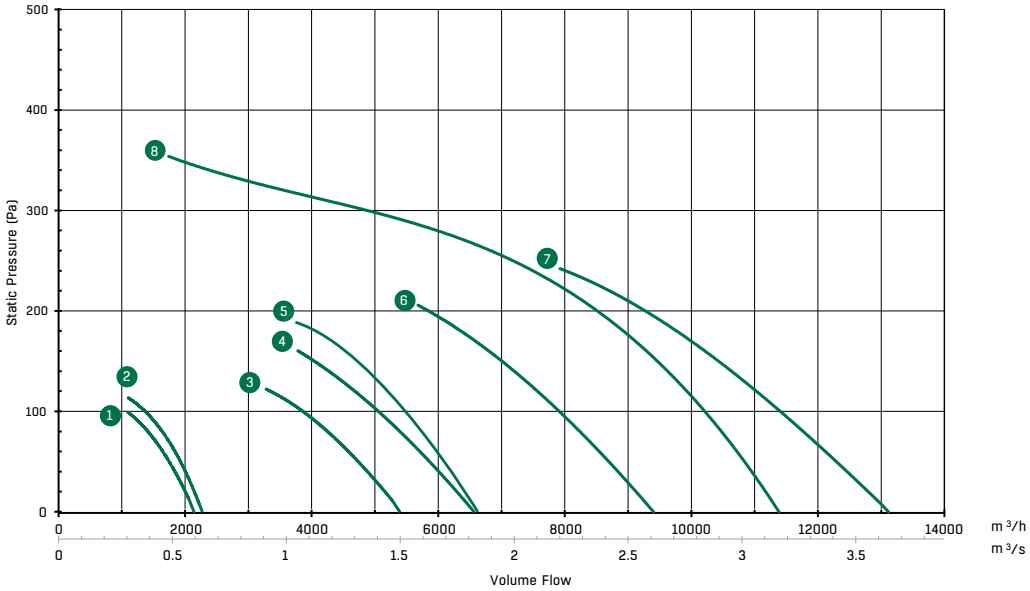

PERFORMANCE TABLE - 315-630MM

Ref	Ref	m³/s @ Pa (Static)						
		0	50	100	150	200	250	300
1	31JM/16/4/5/34	0.59	0.48					
2	35JM/16/4/5/22	0.63	0.53	0.37				
3	40JM/16/4/5/40	1.5	1.31	1.07				
4	45JM/16/4/5/30	1.82	1.62	1.4	1.12			
5	50JM/20/4/6/20	1.84	1.68	1.52	1.3			
6	50JM/20/4/6/32	2.61	2.41	2.19	1.94	1.62		
7	56JM/20/4/6/30	3.64	3.41	3.16	2.89	2.57		
8	63JM/20/4/6/16	3.17	3.01	2.82	2.61	2.38	1.99	1.33

PRODUCT AND ELECTRICAL DETAILS - 315-630MM

Ref	Product Code	Product Number	Pitch Angle (°)		Speed rev/min	Motor	Rating (kW)	Full Load Current (A)	Starting Current (A)	Wiring Diagram (CD)	Speed Controller	
			Min	Max							Electronic	Transformer
1	31JM/16/4/5/34	EJ321460	28	34	1420	BT5	0.075	0.5	1.45	CD3038	ME1.1	TEID 1
2	35JM/16/4/5/22	EJ361460	18	22	1420	BT5	0.075	0.5	1.45	CD3038	ME1.1	TEID 1
3	40JM/16/4/5/40	EJ411452	34	40	1420	BT9	0.25	1.6	3.45	CD3038	ME1.3	TEID 2.2
4	45JM/16/4/5/30	EJ461466	24	30	1420	BT9	0.32	2.2	5	CD3038	ME1.3	TEID 2.2
5	50JM/20/4/6/20	DX511455	16	20	1420	BT9	0.32	2.2	5	CD3038	ME1.3	TEID 2.2
6	50JM/20/4/6/32	EJ511466	32	32	1420	CT9	0.68	4.8	11	CD3038	ME1.6	TEID 5
7	56JM/20/4/6/30	DX571459	26	30	1420	CT9	0.97	6.9	13.5	CD3037	ME1.6	TEID 7.5A
8	63JM/20/4/6/16	DX641453	14	16	1420	CT9	0.97	6.9	13.5	CD3037	ME1.6	TEID 7.5A

For ErP efficiency ratings and grades please refer to our Fan Selector for more information. For speed controllers please see pages 219-267.

Products in **bold** are available from our UK Distributors on next day delivery, if ordered by 4pm. Please call to confirm availability on 01206 222 580.

DRAWINGS - 315-355 MM

315 MM (EJ321460)

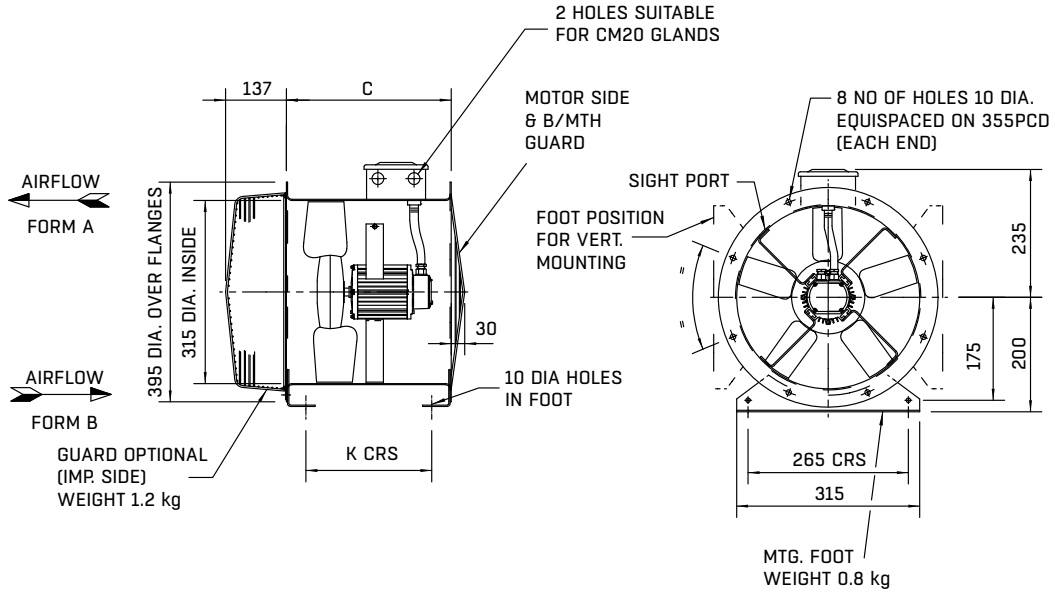

Size	Motor Frame	C	K	Weight kg Fan
315	BT5	330	245	21

355 MM (EJ361460)

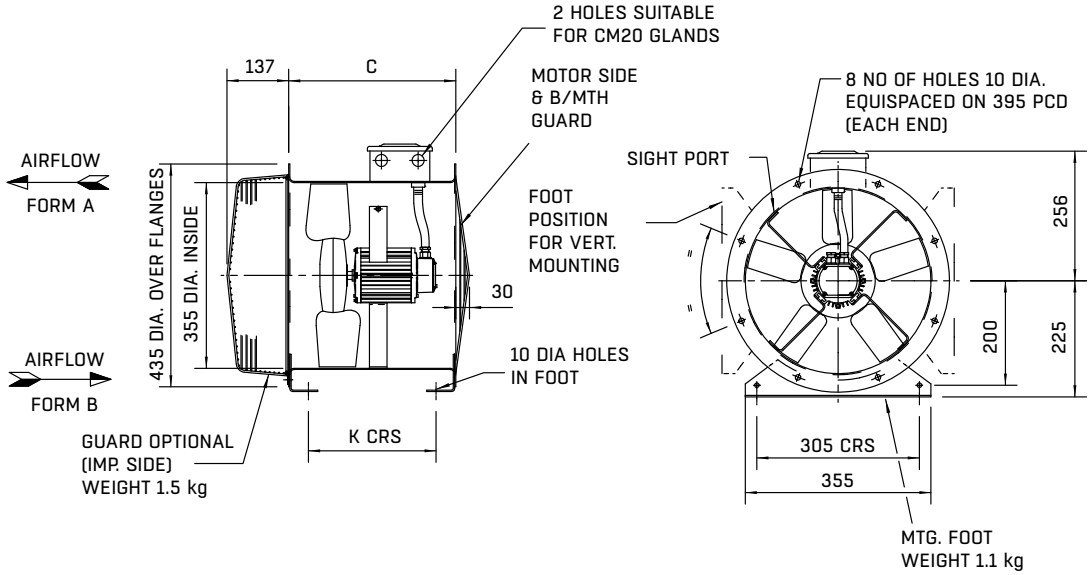

Size	Motor Frame	C	K	Weight kg Fan
355	BT5	330	245	22

All dimensions in mm.

DRAWINGS - 400-450 MM

400 MM (EJ411452)

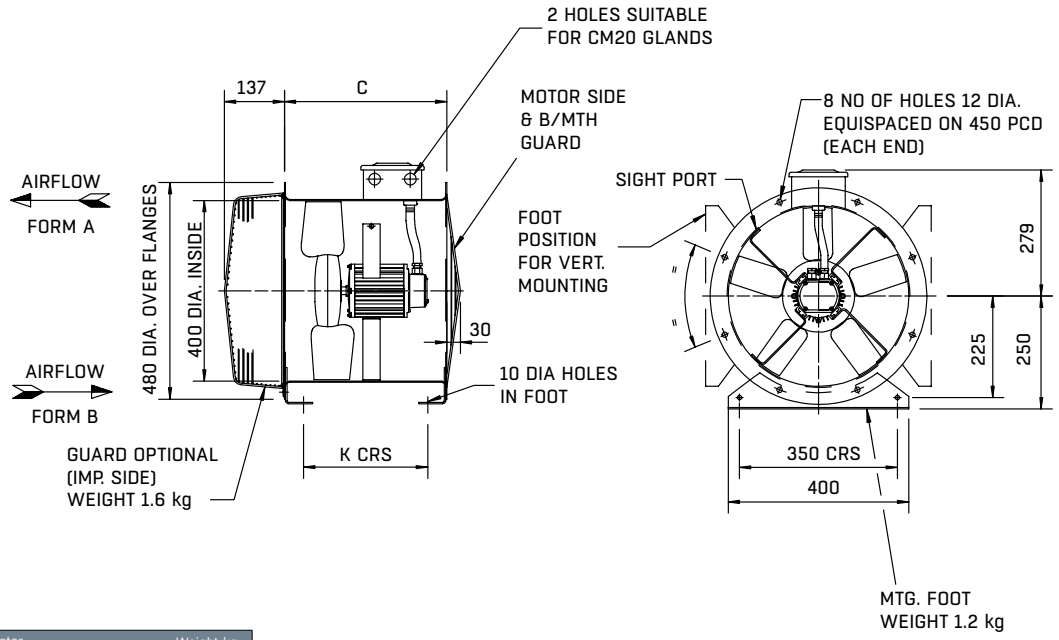

Size	Motor Frame	C	K	Weight kg Fan
400	BT9	375	290	25

450 MM (EJ461466)

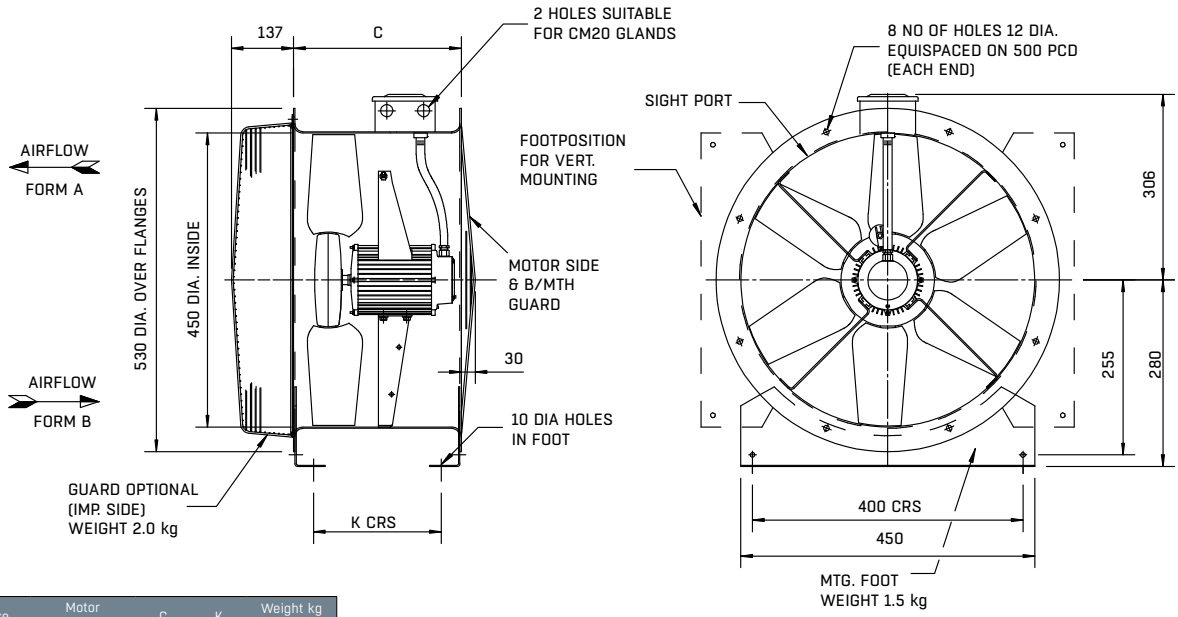

Size	Motor Frame	C	K	Weight kg Fan
450	BT9	330	245	26

All dimensions in mm.

DRAWINGS - 500-560 MM

500 MM (DX511455 & EJ511466)

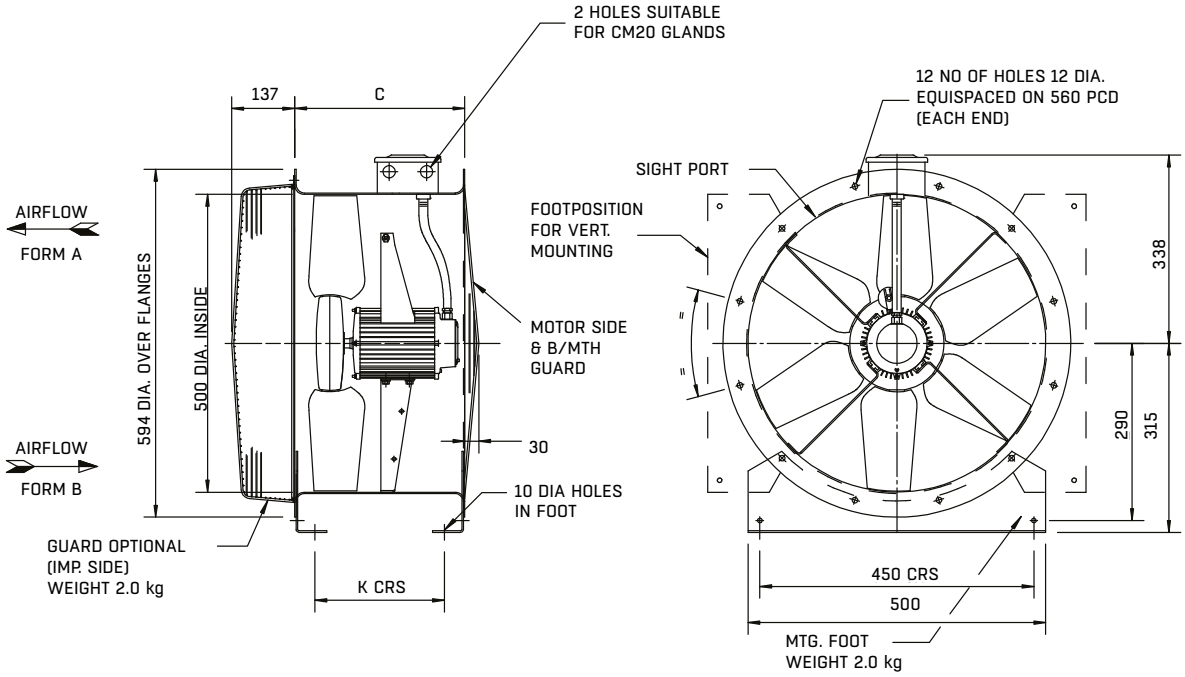

Part Number	Size	Motor Frame	C	K	Weight kg Fan
DX511455	500	BT9	375	290	34
EJ511466	500	CT9	330	245	34

560 MM (DX571459)

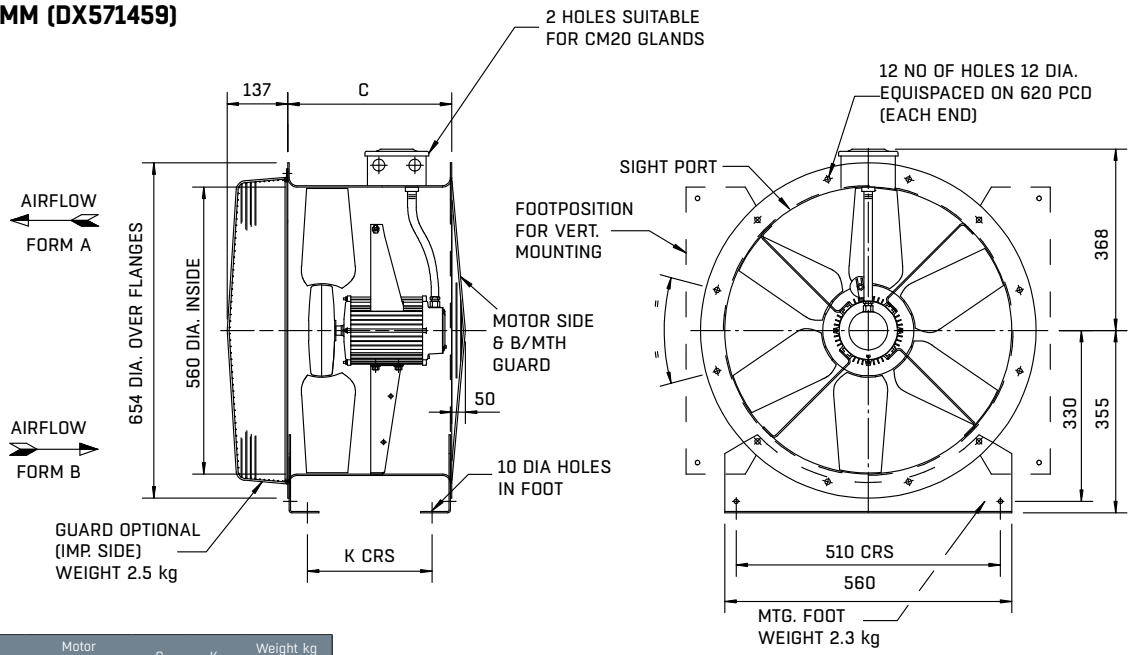

Size	Motor Frame	C	K	Weight kg Fan
560	CT9	375	290	38

All dimensions in mm.

DRAWING - 630 MM

630 MM (DX641453)

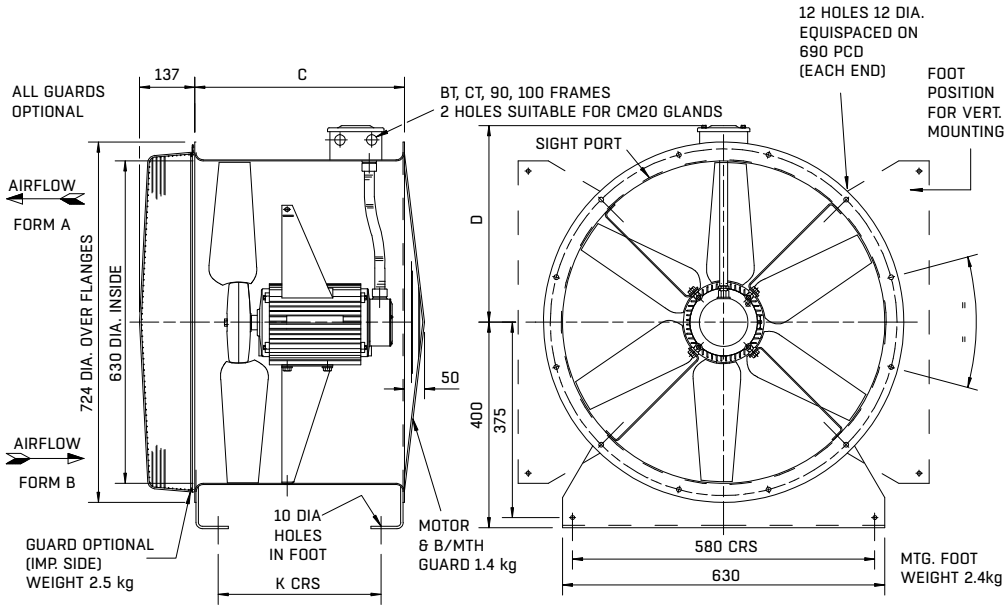

Size	Motor Frame	C	D	K	Weight kg Fan
630	CT9	375	403	290	52

All dimensions in mm.

JMv AEROFOIL PERFORMANCE AND ELECTRICAL DATA

380-420V/50HZ/3ϕ - L TYPE

PERFORMANCE CHART - 315-355MM, 2 POLE

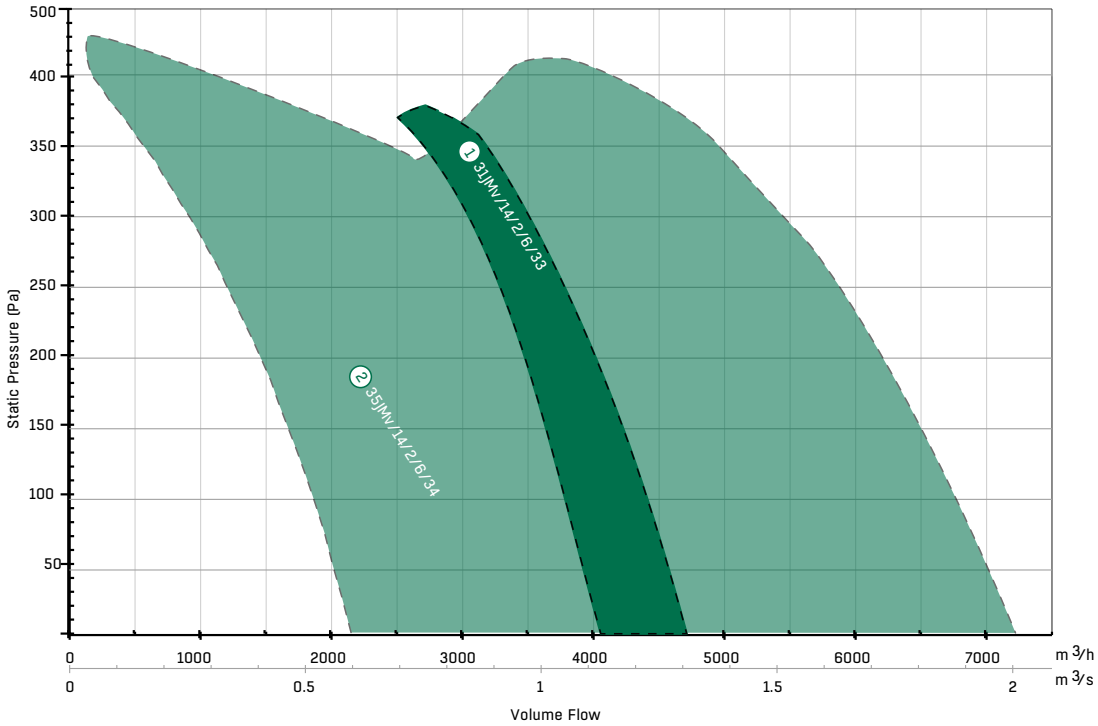

As standard 3 phase JM Aerofoils are supplied at the maximum pitch angle, the envelope curve above illustrates the pitch angle range available on request.

PERFORMANCE TABLE - 315-355 MM, 2 POLE

Ref	Product Code	m³/s @ Pa (Static)																
		0	25	50	75	100	125	150	175	200	225	250	275	300	325	350	375	400
1	**31JMv/14/2/6/33**	**1.26**	**1.24**	**1.22**	**1.2**	**1.17**	**1.14**	**1.12**	**1.09**	**1.06**	**1.03**	**0.99**	**0.96**	**0.92**				
2	**35JMv/14/2/6/34**	**1.88**	**1.85**	**1.82**	**1.79**	**1.75**	**1.72**	**1.68**	**1.65**	**1.61**	**1.57**	**1.53**	**1.49**	**1.45**	**1.41**	**1.36**	**1.32**	**1.27**

PRODUCT AND ELECTRICAL DETAILS - 315-355 MM, 2 POLE

Ref	Product Code	Product Number	Pitch Angle (°)		Speed rev/min	Motor	Rating (kW)	Full Load Current (A)	Starting Current (A)	Wiring Diagram (CD)	Speed Controller			Sound Levels
			Min	Max							Electronic	Transformer	Inverter	
1	**31JMv/14/2/6/33**	**JV346202**	**25**	**33**	**2760**	**BT9**	**0.58**	**1.45**	**5.7**	**CD3020**	N/A	N/A	**IDDXF54 2.2**	**63**
2	**35JMv/14/2/6/34**	**JV386201**	**31**	**34**	**2760**	**80**	**1.32**	**2.79**	**14.5**	**CD3020**	N/A	N/A	**IDDXF54 3.7**	**65**

For ErP efficiency ratings and grades please refer to our Fan Selector for more information. Sound pressure levels quoted are at the inlet, and are average dBA at 3m distance over a sphere at the mid point at the highest angle given, under free field conditions. These are presented for comparative purposes only. For speed controllers please see pages 219-267.

Non stocked JM Aerofoil are available in 10 working weeks, based on the parts availability. If a reduced lead time is required please contact the office.

Products in **bold** are available from our UK Distributors on next day delivery, if ordered by 4pm. Please call to confirm availability on 01206 222 580.

JM AEROFOIL PERFORMANCE AND ELECTRICAL DATA

380-420V/50HZ/3ϕ - L TYPE

PERFORMANCE CHART - 315-355 MM, 4 POLE

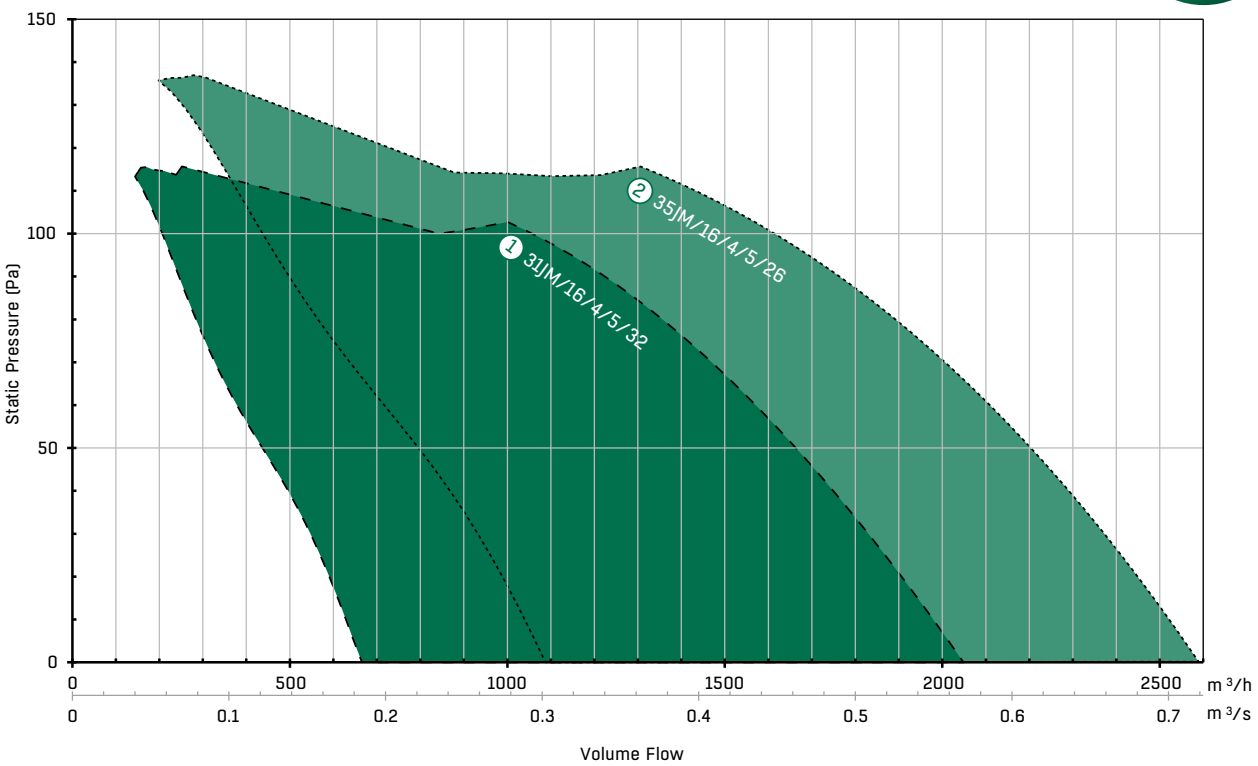

As standard 3 phase JM Aerofoils are supplied at the maximum pitch angle, the envelope curve above illustrates the pitch angle range available on request.

PERFORMANCE TABLE - 315-355 MM, 4 POLE

Ref	Product Code	m³/s @ Pa (Static)		
		0	50	100
1	31JM/16/4/5/32	0.56	0.46	0.29
2	35JM/16/4/5/26	0.71	0.61	0.44

PRODUCT AND ELECTRICAL DETAILS - 315-355 MM, 4 POLE

Ref	Product Code	Product Number	Pitch Angle (°)		Speed rev/min	Motor	Rating (kW)	Full Load Current (A)	Starting Current (A)	Wiring Diagram (CD)	Speed Controller			Sound Levels
			Min	Max							Electronic	Transformer	Inverter	
1	31JM/16/4/5/32	EJ341460	8	32	1420	BT4 (IE1)	0.087	0.35	1.12	CD2416	N/A	TDID 2.5A	IDDXF54-2.2	42
2	35JM/16/4/5/26	EJ381460	8	26	1420	BT4 (IE1)	0.1	0.36	1	CD2416	N/A	TDID 2.5A	IDDXF54-2.2	43

For ErP efficiency ratings and grades please refer to our Fan Selector for more information. Sound pressure levels quoted are at the inlet, and are average dBA at 3m distance over a sphere at the mid point at the highest angle given, under free field conditions. These are presented for comparative purposes only. For speed controllers please see pages 250-297.

Non stocked JM Aerofoil are available in 10 working weeks, based on the parts availability. If a reduced lead time is required please contact the office.

Products in **bold** are available from our UK Distributors on next day delivery, if ordered by 4pm. Please call to confirm availability on 01206 222 580.

DRAWINGS - 315-355 MM

315 MM (JV346202)

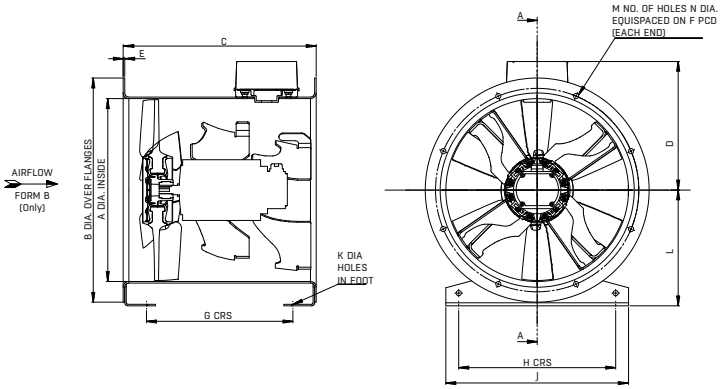

Product Number	Size	Motor frame	A	B	C	D	E	F	G	H	J	K	L	M	N	Weight kg Fan
JV346202	315	BT4	315	395	375	229.5	3	355	285	265	315	10	200	8	10	23

315 MM (EJ341460)

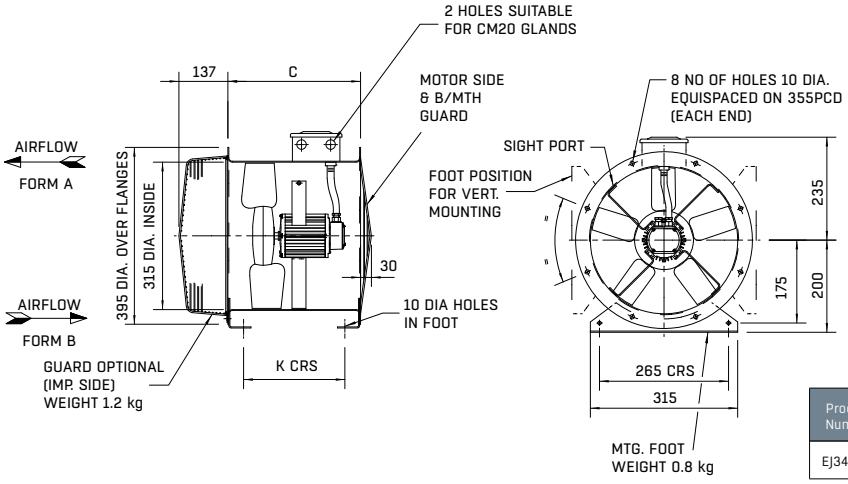

Product Number	Size	Motor Frame	C	K	Weight kg Fan
EJ341460	315	BT4	330	245	22

355 MM (EJ381460)

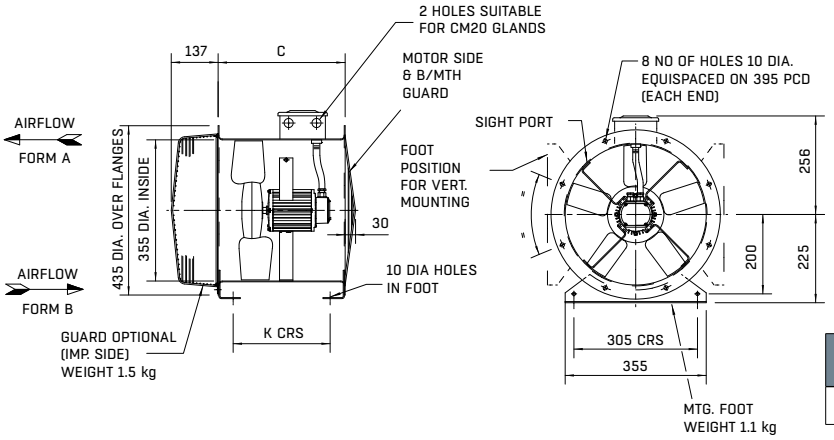

Product Number	Size	Motor Frame	C	K	Weight kg Fan
EJ381460	355	BT9	330	245	34

All dimensions in mm.

JM AEROFOIL PERFORMANCE AND ELECTRICAL DATA

380-420V/50HZ/3ϕ - L TYPE

PERFORMANCE CHART - 400-450 MM, 2 POLE

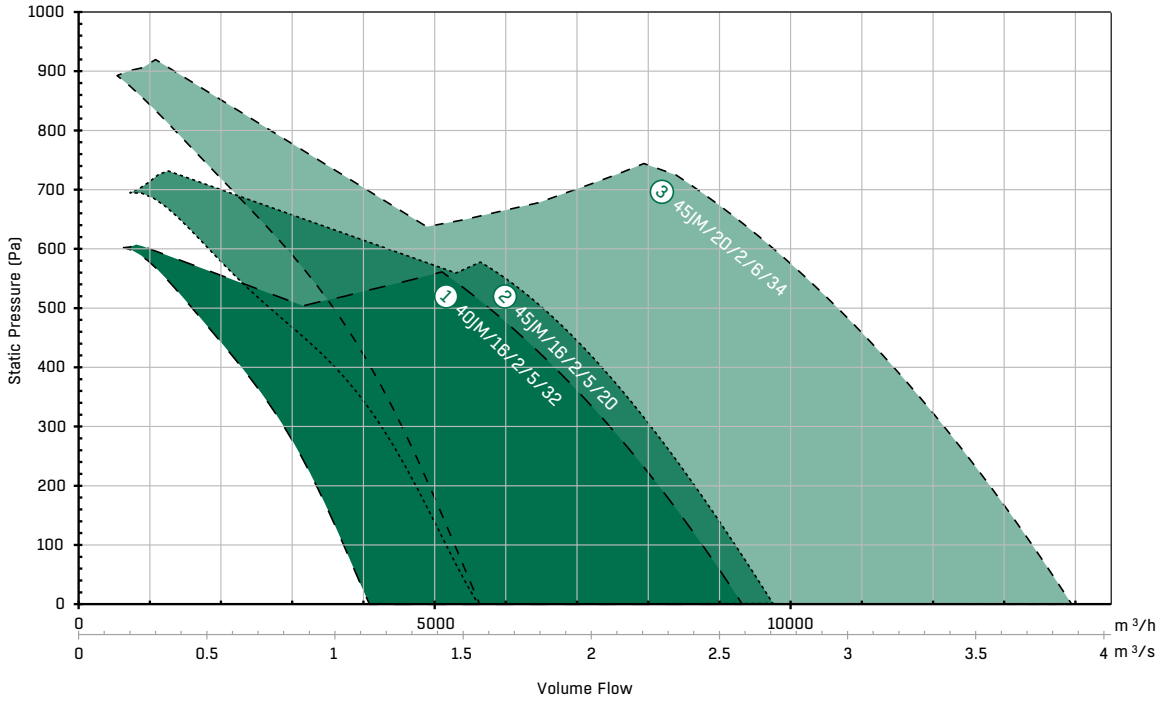

As standard 3 phase JM Aerofoils are supplied at the maximum pitch angle, the envelope curve above illustrates the pitch angle range available on request.

PERFORMANCE TABLE - 400-450 MM, 2 POLE

Ref	Product Code	m³/s @ Pa (Static)										
		0	50	100	150	200	250	300	400	500	600	700
1	**40JM/16/2/5/32**	**2.58**	**2.51**	**2.43**	**2.35**	**2.26**	**2.17**	**2.07**	**1.85**	**1.6**		
3	**45JM/16/2/5/20**	**2.7**	**2.63**	**2.56**	**2.48**	**2.4**	**2.32**	**2.23**	**2.04**	**1.81**		
2	**45JM/20/2/6/34**	**3.87**	**3.79**	**3.72**	**3.63**	**3.55**	**3.46**	**3.37**	**3.18**	**2.96**	**2.71**	**2.41**

PRODUCT AND ELECTRICAL DETAILS - 400-450 MM, 2 POLE

Ref	Product Code	Product Number	Pitch Angle (°)		Speed rev/min	Motor	Rating (kW)	Full Load Current (A)	Starting Current (A)	Wiring Diagram (CD)	Speed Controller			Sound Levels
			Min	Max							Electronic	Transformer	Inverter	
1	**40JM/16/2/5/32**	**EJ431273**	**10**	**32**	**2840**	**80 (IE2)**	**1.73**	**3.59**	**18.3**	**CD2416**	N/A	N/A	**IDDXF54-3.7**	**61**
2	**45JM/16/2/5/20**	**EE481272**	**8**	**20**	**2840**	**80 (IE2)**	**1.73**	**3.59**	**18.3**	**CD2416**	N/A	N/A	**IDDXF54-3.7**	**66**
3	**45JM/20/2/6/34**	**EJ481275**	**10**	**34**	**2910**	**100L (IE2)**	**3.6**	**7.1**	**45.44**	**CD2416**	N/A	N/A	**IDDXF54-7.2**	**72**

For ErP efficiency ratings and grades please refer to our Fan Selector for more information. Sound pressure levels quoted are at the inlet, and are average dBA at 3m distance over a sphere at the mid point at the highest angle given, under free field conditions. These are presented for comparative purposes only. For speed controllers please see pages 250-297.

Non stocked JM Aerofoil are available in 10 working weeks, based on the parts availability. If a reduced lead time is required please contact the office.

Products in **bold** are available from our UK Distributors on next day delivery, if ordered by 4pm. Please call to confirm availability on 01206 222 580.

JMv AEROFOIL PERFORMANCE AND ELECTRICAL DATA

380-420V/50HZ/3ϕ - L TYPE

PERFORMANCE CHART - 400-450 MM, 4 POLE

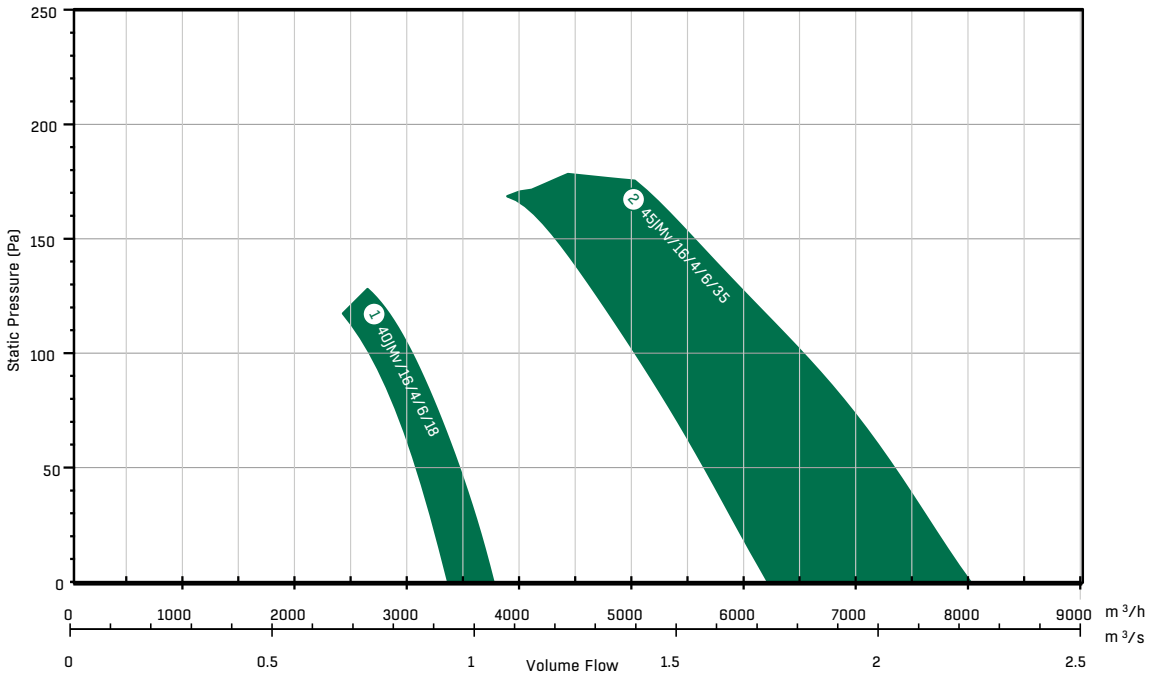

As standard 3 phase JM Aerofoils are supplied at the maximum pitch angle, the envelope curve above illustrates the pitch angle range available on request.

PERFORMANCE TABLE - 400-450 MM, 4 POLE

Ref	Product Code	m³/s @ Pa (Static)			
		0	50	100	150
1	**40JMv/16/4/6/18**	**0.99**	**0.90**	**0.78**	
2	**45JMv/16/4/6/35**	**2.20**	**2.00**	**1.77**	**1.50**

PRODUCT AND ELECTRICAL DETAILS - 400-450 MM, 4 POLE

Ref	Product Code	Product Number	Pitch Angle (°)		Speed rev/min	Motor	Rating (kW)	Full Load Current (A)	Starting Current (A)	Wiring Diagram (CD)	Speed Controller			Sound Levels
			Min	Max							Electronic	Transformer	Inverter	
1	**40JMv/16/4/6/18**	**JV436452**	**14**	**18**	**1400**	**80**	**0.14**	**0.40**	**2.00**	**CD3020**	N/A	N/A	**IDDXF54-2.2**	**51**
2	**45JMv/16/4/6/35**	**JV486460**	**23**	**35**	**1400**	**80**	**0.66**	**1.49**	**7.37**	**CD3020**	N/A	N/A	**IDDXF54-2.2**	**57**

For ErP efficiency ratings and grades please refer to our Fan Selector for more information. Sound pressure levels quoted are at the inlet, and are average dBA at 3m distance over a sphere at the mid point at the highest angle given, under free field conditions. These are presented for comparative purposes only. For speed controllers please see pages 250-297.

Non stocked JM Aerofoil are available in 10 working weeks, based on the parts availability. If a reduced lead time is required please contact the office.

Products in **bold** are available from our UK Distributors on next day delivery, if ordered by 4pm. Please call to confirm availability on 01206 222 580.

DRAWINGS - 400-450 MM 2 POLE

400 MM (EJ431273)

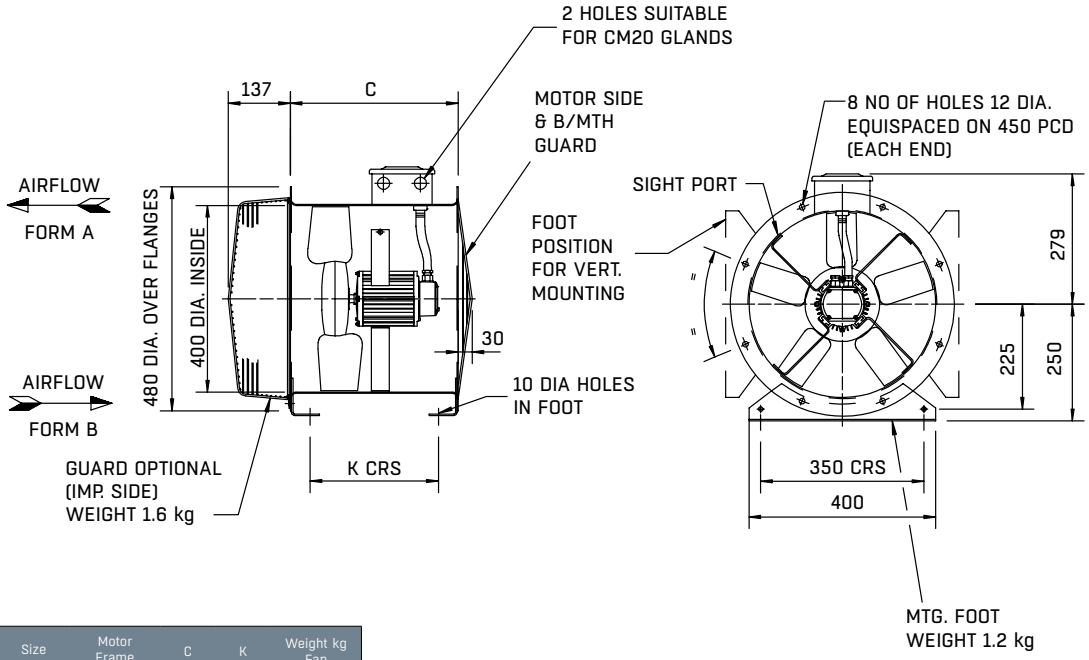

Product Number	Size	Motor Frame	C	K	Weight kg Fan
EJ431273	400	80	375	290	35

450 MM (EE481272 & EJ481275)

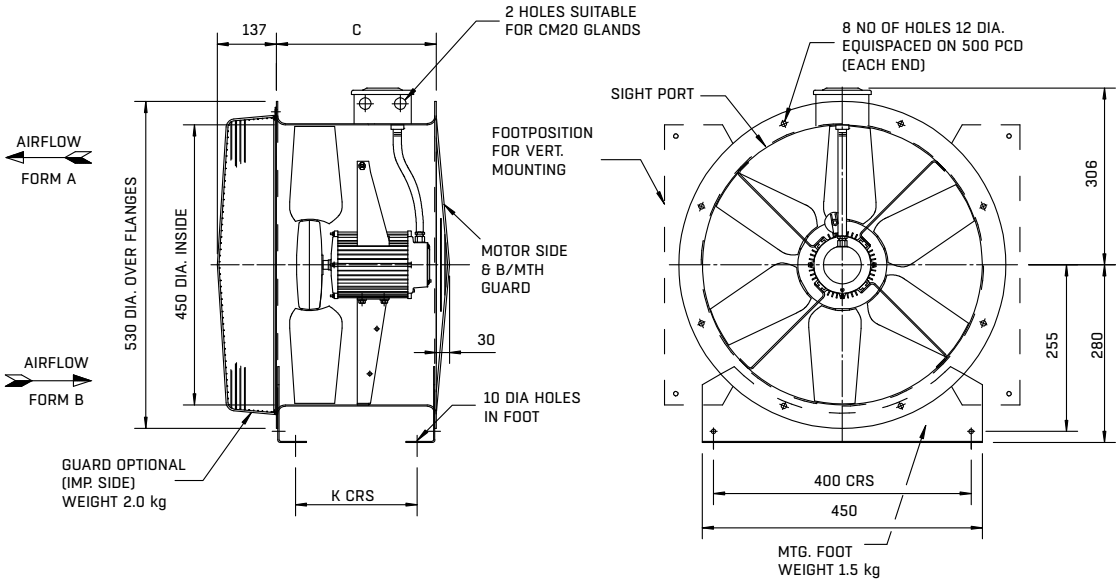

Product Number	Size	Motor Frame	C	K	Weight kg Fan
EE481272	450	80	375	290	37
EJ481275	450	100L	520	434	60

All dimensions in mm.

DRAWINGS - 400-450 MM 4 POLE

400 MM (JV436452 & JV486460)

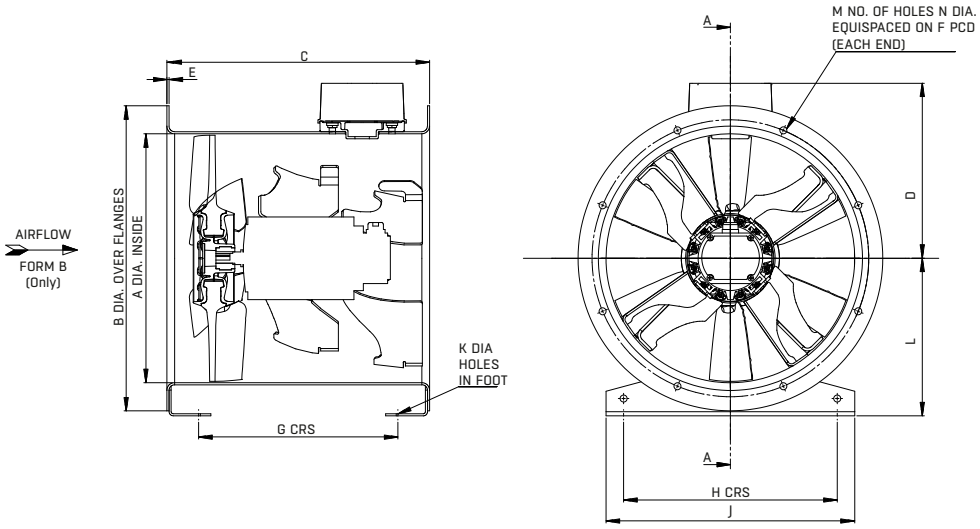

Product Number	Size	Motor frame	A	B	C	D	E	F	G	H	J	K	L	M	N	Weight kg Fan
JV436452	400	80	400	480	375	272	3	450	285	350	400	10	250	8	10	35
JV486460	450	80	450	530	375	297	3	500	275	400	450	10	280	8	12	36

All dimensions in mm.

JM AEROFOIL PERFORMANCE AND ELECTRICAL DATA

380-420V/50HZ/3ϕ - L TYPE

PERFORMANCE CHART - 500 MM, 2 POLE

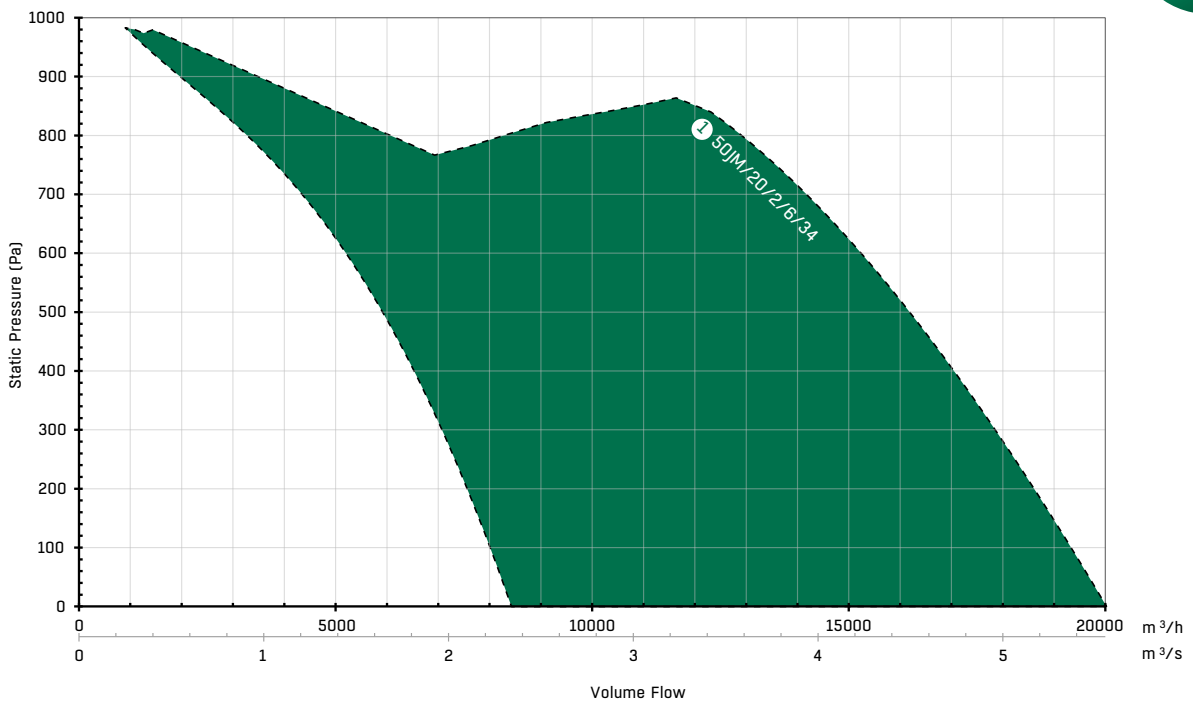

As standard 3 phase JM Aerofoils are supplied at the maximum pitch angle, the envelope curve above illustrates the pitch angle range available on request.

PERFORMANCE TABLE - 500 MM, 2 POLE

Ref	Product Code	m³/s @ Pa (Static)											
		0	50	100	150	200	250	300	400	500	600	700	800
1	**50JM/20/2/6/34**	**5.56**	**5.46**	**5.36**	**5.27**	**5.16**	**5.06**	**4.95**	**4.73**	**4.49**	**4.23**	**3.93**	**3.58**

PRODUCT AND ELECTRICAL DETAILS - 500 MM, 2 POLE

Ref	Product Code	Product Number	Pitch Angle (°)		Speed rev/min	Motor	Rating (kW)	Full Load Current (A)	Starting Current (A)	Wiring Diagram (CD)	Speed Controller			Sound Levels
			Min	Max							Electronic	Transformer	Inverter	
1	**50JM/20/2/6/34**	**EJ531274**	**10**	**34**	**2910**	**112M (IE2)**	**6.2**	**11.7**	**77.2**	**CD2417**	N/A	N/A	**IDDXF54-12**	**75**

For ErP efficiency ratings and grades please refer to our Fan Selector for more information. Sound pressure levels quoted are at the inlet, and are average dBA at 3m distance over a sphere at the mid point at the highest angle given, under free field conditions. These are presented for comparative purposes only. For speed controllers please see pages 250-297.

Non stocked JM Aerofoil are available in 10 working weeks, based on the parts availability. If a reduced lead time is required please contact the office.

Products in **bold** are available from our UK Distributors on next day delivery, if ordered by 4pm. Please call to confirm availability on 01206 222 580.

JM AEROFOIL PERFORMANCE AND ELECTRICAL DATA

380-420V/50HZ/3ϕ - L TYPE

PERFORMANCE CHART - 500 MM, 4 POLE

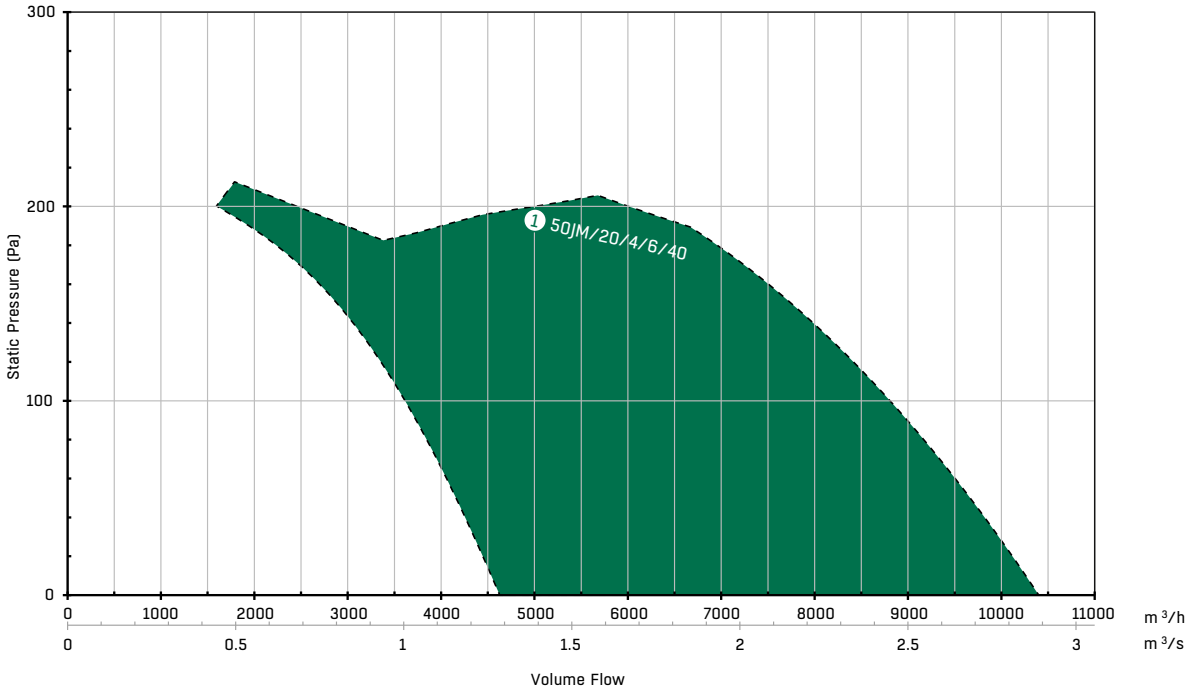

As standard 3 phase JM Aerofoils are supplied at the maximum pitch angle, the envelope curve above illustrates the pitch angle range available on request.

PERFORMANCE TABLE - 500 MM, 4 POLE

Ref	Product Code	m³/s @ Pa (Static)			
		0	50	100	150
1	**50JM/20/4/6/40**	**2.96**	**2.76**	**2.52**	**2.21**

PRODUCT AND ELECTRICAL DETAILS - 500 MM, 4 POLE

Ref	Product Code	Product Number	Pitch Angle (°)		Speed rev/min	Motor	Rating (kW)	Full Load Current (A)	Starting Current (A)	Wiring Diagram (CD)	Speed Controller			Sound Levels
			Min	Max							Electronic	Transformer	Inverter	
1	**50JM/20/4/6/40**	**EJ531478**	**12**	**40**	**1420**	**80 (IE2)**	**0.9**	**1.92**	**9.79**	**CD2416**	N/A	N/A	**IDDXF54-2.2**	**59**

For ErP efficiency ratings and grades please refer to our Fan Selector for more information. Sound pressure levels quoted are at the inlet, and are average dBA at 3m distance over a sphere at the mid point at the highest angle given, under free field conditions. These are presented for comparative purposes only. For speed controllers please see pages 250-297.

Non stocked JM Aerofoil are available in 10 working weeks, based on the parts availability. If a reduced lead time is required please contact the office.

Products in **bold** are available from our UK Distributors on next day delivery, if ordered by 4pm. Please call to confirm availability on 01206 222 580.

DRAWINGS - 500 MM

500 MM (EJ531274 & EJ531478)

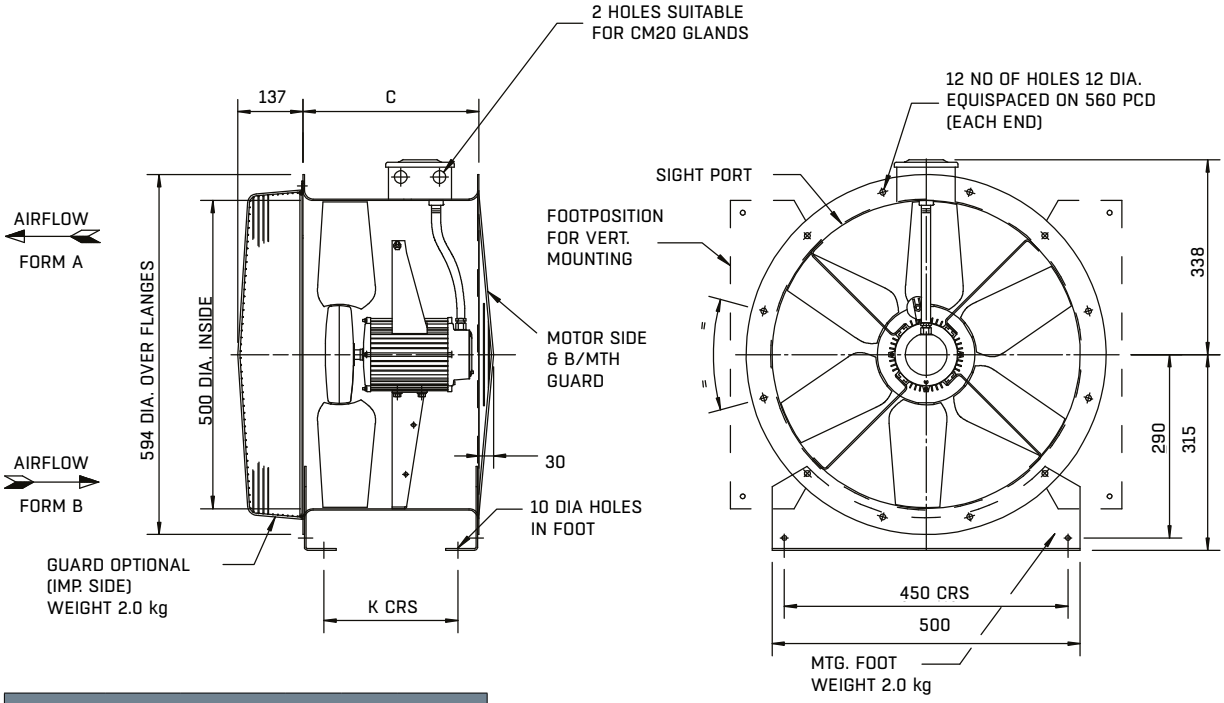

Prodyct Number	Size	Motor Frame	C	K	Weight kg Fan
EJ531274	500	80	375	290	39
EJ531478	500	112M	520	434	76

All dimensions in mm.

JM AEROFOIL PERFORMANCE AND ELECTRICAL DATA

380-420V/50HZ/3ϕ - L TYPE

PERFORMANCE CHART - 560 MM, 2 POLE

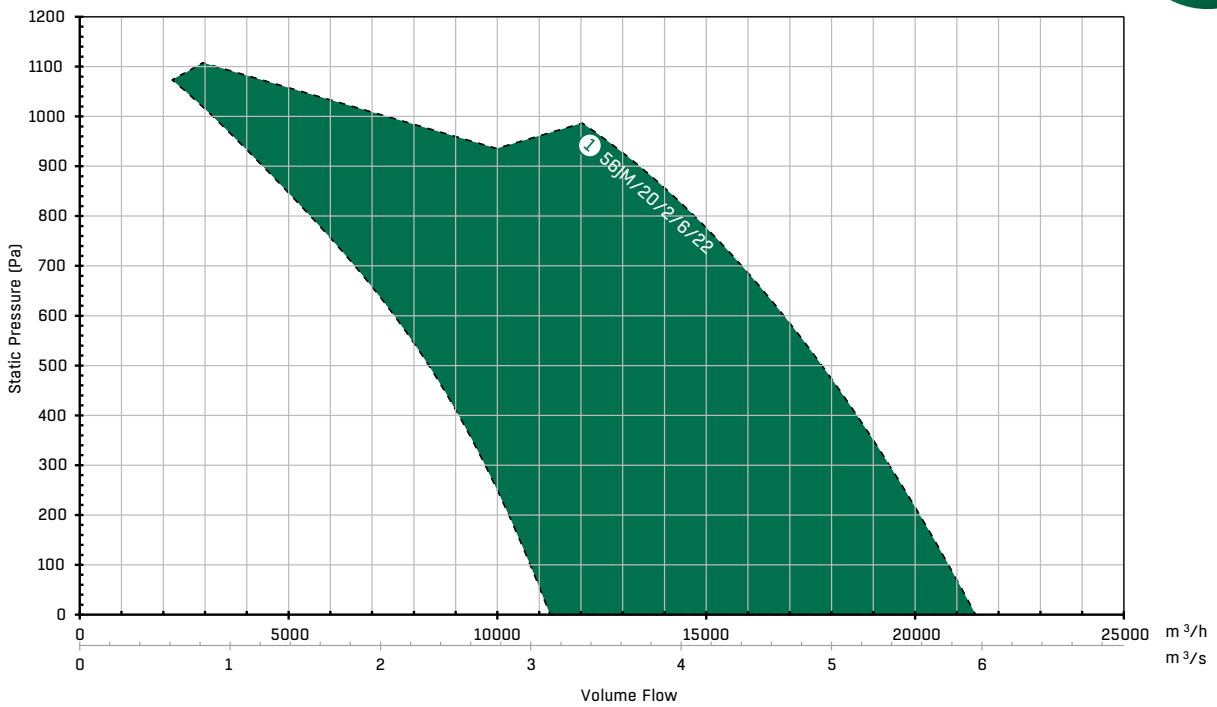

As standard 3 phase JM Aerofoils are supplied at the maximum pitch angle, the envelope curve above illustrates the pitch angle range available on request.

PERFORMANCE TABLE - 560 MM, 2 POLE

Ref	Product Code	m³/s @ Pa (Static)												
		0	50	100	150	200	250	300	400	500	600	700	800	900
1	**56JM/20/2/6/22**	**5.95**	**5.86**	**5.77**	**5.68**	**5.58**	**5.48**	**5.38**	**5.16**	**4.93**	**4.68**	**4.4**	**4.08**	**3.72**

PRODUCT AND ELECTRICAL DETAILS - 560 MM, 2 POLE

Ref	Product Code	Product Number	Pitch Angle (°)		Speed rev/min	Motor	Rating (kW)	Full Load Current (A)	Starting Current (A)	Wiring Diagram (CD)	Speed Controller			Sound Levels
			Min	Max							Electronic	Transformer	Inverter	
1	**56JM/20/2/6/22**	**EE591271**	**8**	**22**	**2910**	**112M (IE2)**	**6.2**	**11.7**	**77.2**	**CD2417**	N/A	N/A	**IDDXF54-12**	**72**

For ErP efficiency ratings and grades please refer to our Fan Selector for more information. Sound pressure levels quoted are at the inlet, and are average dBA at 3m distance over a sphere at the mid point at the highest angle given, under free field conditions. These are presented for comparative purposes only. For speed controllers please see pages 250-297.

Non stocked JM Aerofoil are available in 10 working weeks, based on the parts availability. If a reduced lead time is required please contact the office.

Products in **bold** are available from our UK Distributors on next day delivery, if ordered by 4pm. Please call to confirm availability on 01206 222 580.

JM AEROFOIL PERFORMANCE AND ELECTRICAL DATA

380-420V/50HZ/3ϕ - L TYPE

PERFORMANCE CHART - 560 MM, 4 POLE

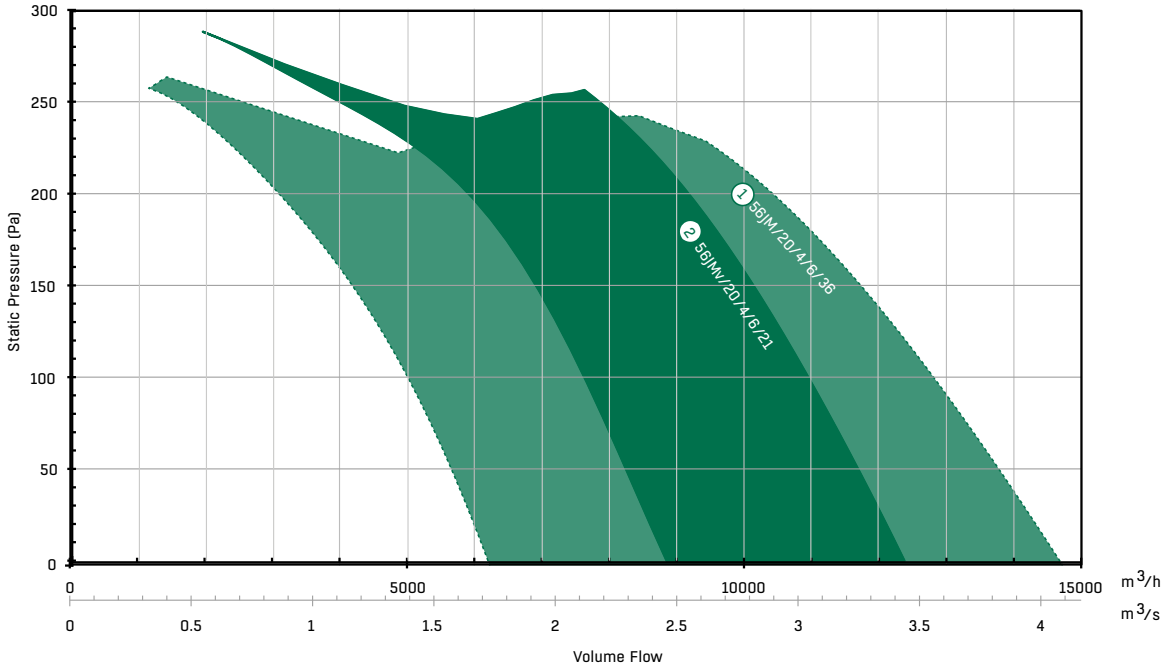

As standard 3 phase JM Aerofoils are supplied at the maximum pitch angle, the envelope curve above illustrates the pitch angle range available on request.

PERFORMANCE TABLE - 560 MM, 4 POLE

Ref	Product Code	m³/s @ Pa (Static)					
		0	50	100	150	200	250
1	**56JM/20/4/6/36**	**4.08**	**3.83**	**3.56**	**3.26**	**2.9**	
2	**56JMv/20/4/6/21**	**3.44**	**3.24**	**3.03**	**2.8**	**2.52**	**2.15**

PRODUCT AND ELECTRICAL DETAILS - 560 MM, 4 POLE

Ref	Product Code	Product Number	Pitch Angle (°)		Speed rev/min	Motor	Rating (kW)	Full Load Current (A)	Starting Current (A)	Wiring Diagram (CD)	Speed Controller			Sound Levels
			Min	Max							Electronic	Transformer	Inverter	
1	**56JM/20/4/6/36**	**EJ591478**	**10**	**36**	**1420**	**90S (IE2)**	**1.32**	**2.84**	**15.6**	**CD2416**	N/A	N/A	**IDDXF54-3.7**	**62**
2	**56JMv/20/4/6/21**	**JV596458**	**10**	**21**	**1400**	**CT9**	**1.15**	**3.2**	**11**	**CD3020**	N/A	**TDID 4A**	**IDDXF54-3.7**	**60**

For ErP efficiency ratings and grades please refer to our Fan Selector for more information. Sound pressure levels quoted are at the inlet, and are average dBA at 3m distance over a sphere at the mid point at the highest angle given, under free field conditions. These are presented for comparative purposes only. For speed controllers please see pages 250-297.

Non stocked JM Aerofoil are available in 10 working weeks, based on the parts availability. If a reduced lead time is required please contact the office.

Products in **bold** are available from our UK Distributors on next day delivery, if ordered by 4pm. Please call to confirm availability on 01206 222 580.

DRAWINGS - 560 MM

560 MM (EE591271 & EJ591478)

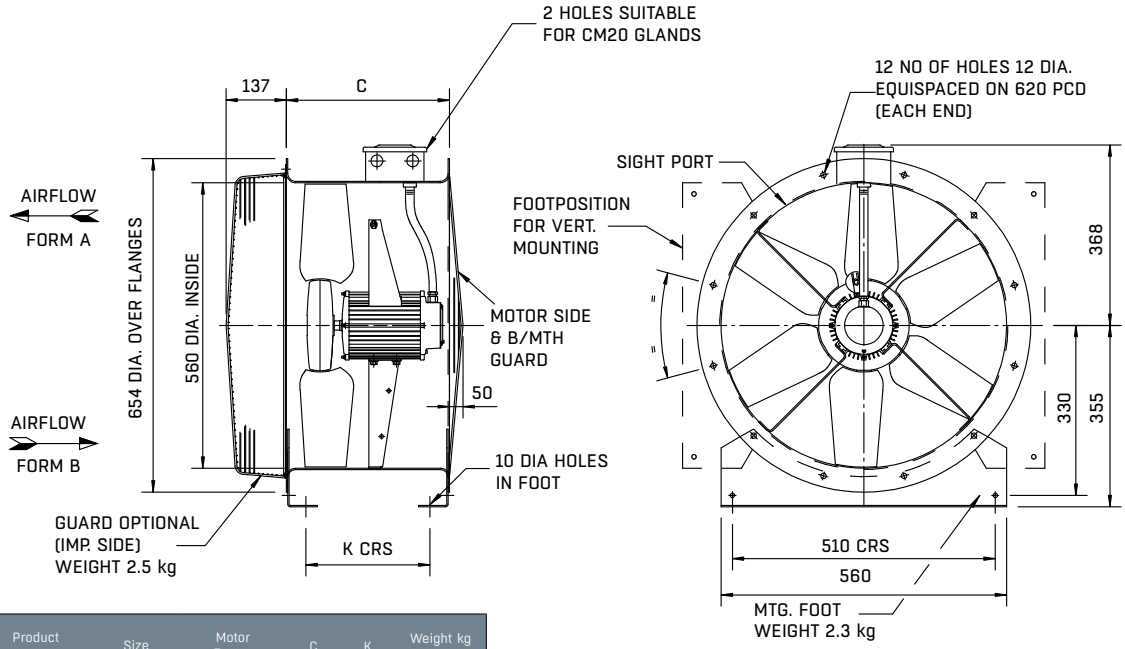

Product Number	Size	Motor Frame	C	K	Weight kg Fan
EJ591478	560	90S	520	434	55
EE591271	560	112M	520	434	78

560 MM (JV596458)

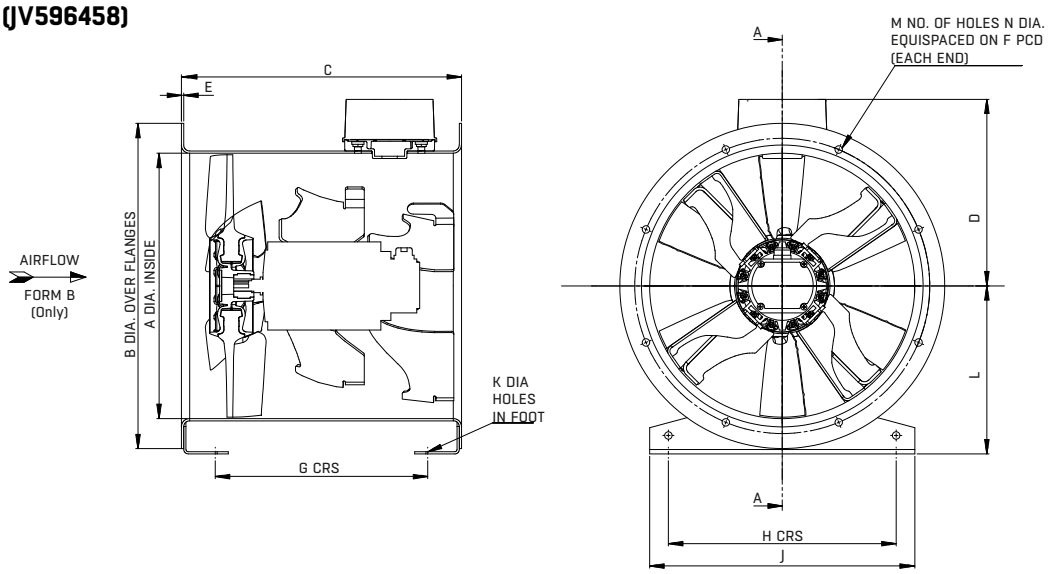

Product Number	Size	Motor frame	A	B	C	D	E	F	G	H	J	K	L	M	N	Weight (KG)
JV596458	560	CT9	560	654	520	352	3	620	420	510	560	10	355	12	12	54

All dimensions in mm.

JM AEROFOIL PERFORMANCE AND ELECTRICAL DATA

380-420V/50HZ/3ϕ - L TYPE

PERFORMANCE CHART - 630 MM, 2 POLE

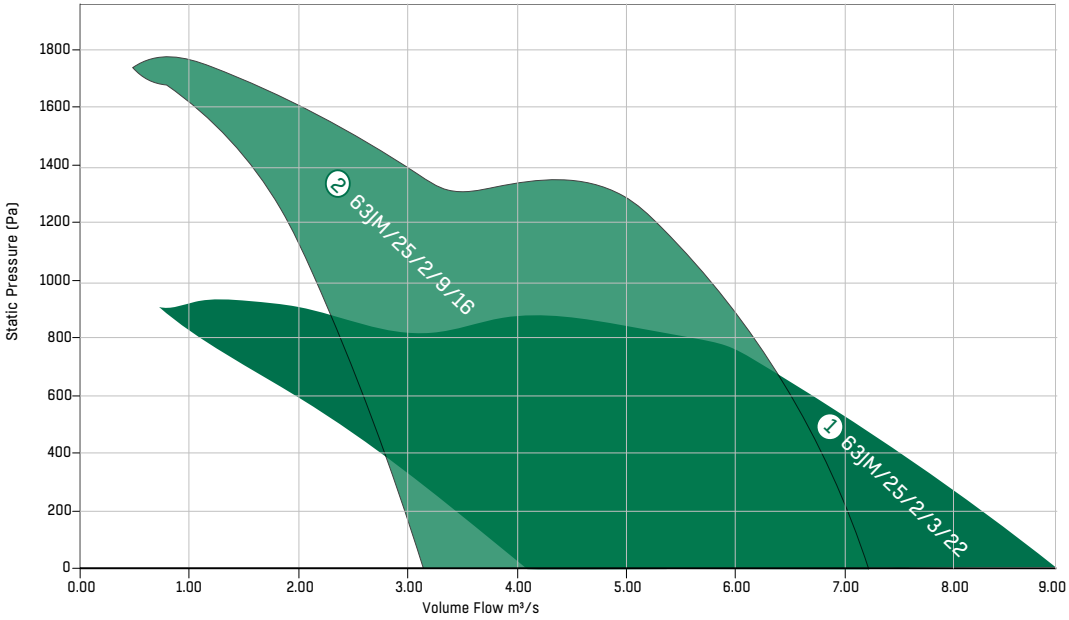

As standard 3 phase JM Aerofoils are supplied at the maximum pitch angle, the envelope curve above illustrates the pitch angle range available on request.

PERFORMANCE TABLE - 630 MM, 2 POLE

Ref	Product Code	m³/s @ Pa (Static)																	
		0	100	200	300	400	500	600	700	800	900	1000	1100	1200	1300	1400	1500	1600	1700
1	**63JM/25/2/3/22**	**7.31**	**6.97**	**6.61**	**6.24**	**5.86**	**5.45**	**5.02**	**4.54**	**3.99**									
2	**63JM/25/2/9/16**	**5.56**	**5.44**	**5.32**	**5.2**	**5.07**	**4.93**	**4.79**	**4.64**	**4.47**	**4.3**	**4.1**	**3.88**	**3.62**	**3.31**	**2.95**	**2.51**	**2.02**	**1.48**

PRODUCT AND ELECTRICAL DETAILS - 630 MM, 2 POLE

Ref	Product Code	Product Number	Pitch Angle (°)		Speed rev/min	Motor	Rating (kW)	Full Load Current (A)	Starting Current (A)	Wiring Diagram (CD)	Speed Controller			Sound Levels
			Min	Max							Electronic	Transformer	Inverter	
1	**63JM/25/2/3/22**	**EJ661232**	**8**	**22**	**2910**	**112M**	**6.2**	**11.7**	**77.2**	**CD2417**	N/A	N/A	**EA901022**	**74**
2	**63JM/25/2/9/16**	**EJ669201**	**8**	**22**	**2910**	**160M**	**13.2**	**24.6**	**142.7**	**CD2417**	N/A	N/A	**EA901024**	**77**

For ErP efficiency ratings and grades please refer to our Fan Selector for more information. Sound pressure levels quoted are at the inlet, and are average dBA at 3m distance over a sphere at the mid point at the highest angle given, under free field conditions. These are presented for comparative purposes only. For speed controllers please see pages 250-297.

Non stocked JM Aerofoil are available in 10 working weeks, based on the parts availability. If a reduced lead time is required please contact the office.

Products in **bold** are available from our UK Distributors on next day delivery, if ordered by 4pm. Please call to confirm availability on 01206 222 580.

JM AEROFOIL PERFORMANCE AND ELECTRICAL DATA

380-420V/50HZ/3ϕ - L TYPE

PERFORMANCE CHART - 630 MM, 4 POLE

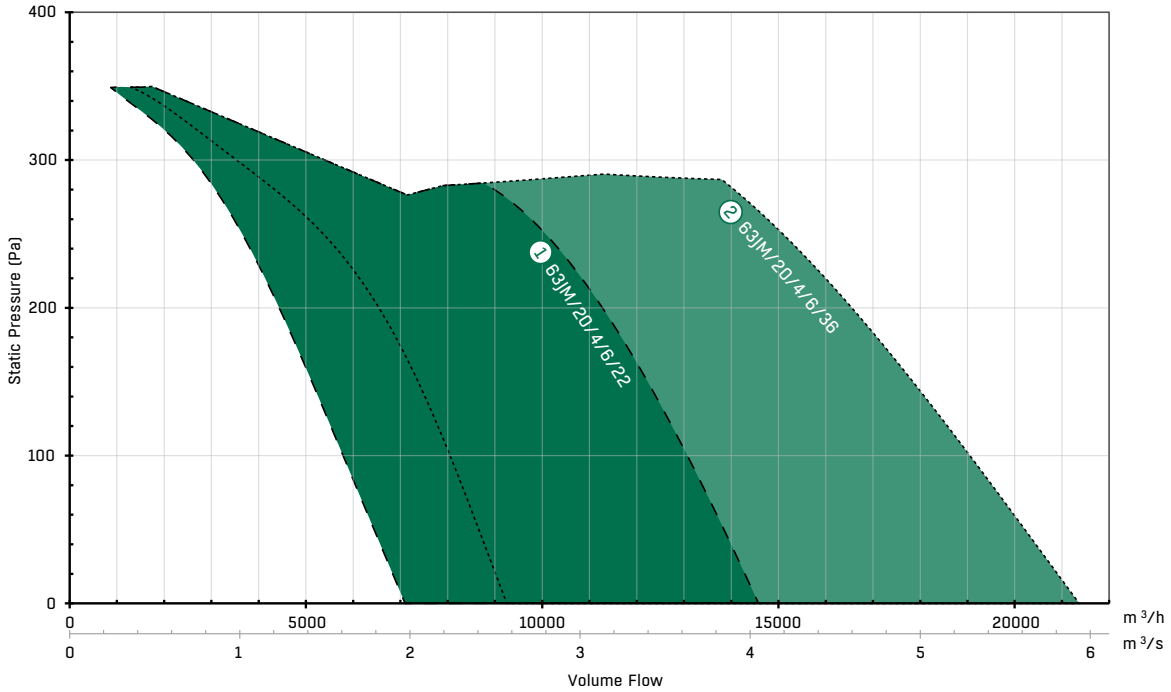

As standard 3 phase JM Aerofoils are supplied at the maximum pitch angle, the envelope curve above illustrates the pitch angle range available on request.

PERFORMANCE TABLE - 630 MM, 4 POLE

Ref	Product Code	m³/s @ Pa (Static)					
		0	50	100	150	200	250
1	63JM/20/4/6/22	4.04	3.84	3.63	3.39	3.13	2.79
2	63JM/20/4/6/36	5.93	5.61	5.29	4.95	4.59	4.19

PRODUCT AND ELECTRICAL DETAILS - 630 MM, 4 POLE

Ref	Product Code	Product Number	Pitch Angle (°)		Speed rev/min	Motor	Rating (kW)	Full Load Current (A)	Starting Current (A)	Wiring Diagram (CD)	Speed Controller			Sound Levels
			Min	Max							Electronic	Transformer	Inverter	
1	63JM/20/4/6/22	EE661473	8	22	1420	90S (IE2)	1.32	2.84	15.6	CD2416	N/A	N/A	IDDXF54-3.7	60
2	63JM/20/4/6/36	EJ661474	12	36	1420	100L (IE2)	2.64	5.49	30.74	CD2416	N/A	N/A	IDDXF54-7.2	64

For ErP efficiency ratings and grades please refer to our Fan Selector for more information. Sound pressure levels quoted are at the inlet, and are average dBA at 3m distance over a sphere at the mid point at the highest angle given, under free field conditions. These are presented for comparative purposes only. For speed controllers please see pages 250-297.

Non stocked JM Aerofoil are available in 10 working weeks, based on the parts availability. If a reduced lead time is required please contact the office.

Products in **bold** are available from our UK Distributors on next day delivery, if ordered by 4pm. Please call to confirm availability on 01206 222 580.

DRAWINGS - 630 MM

630 MM (EE661473 & EJ661474)

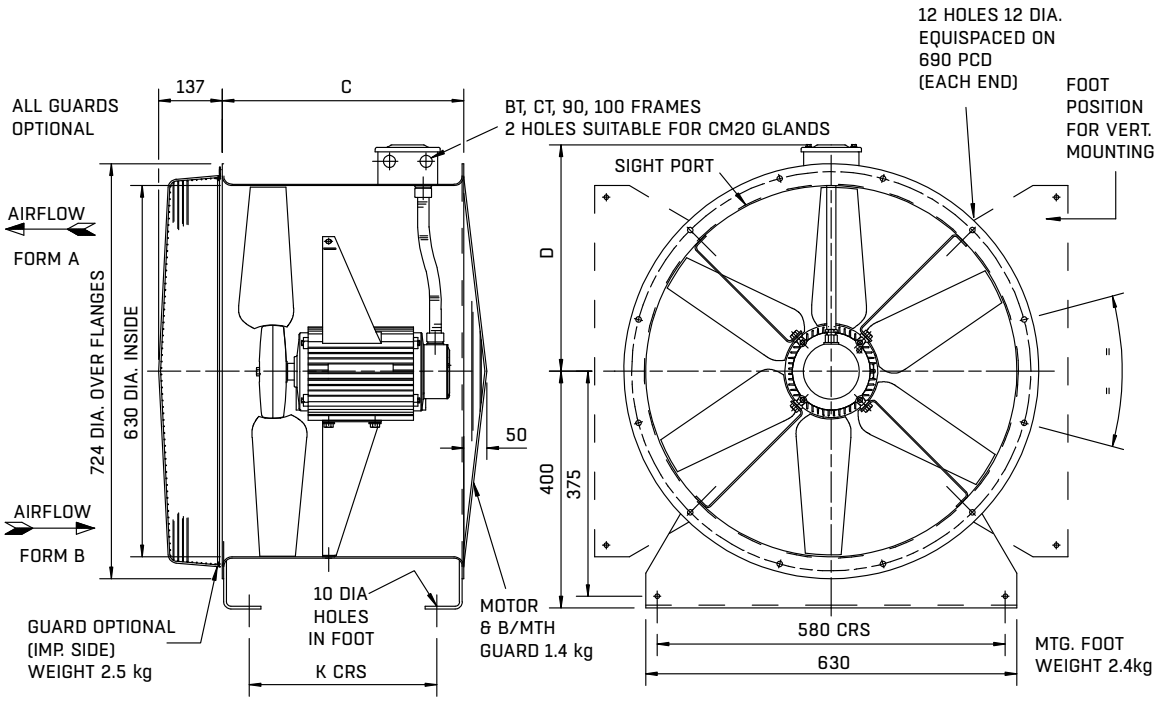

Product Number	Size	Motor Frame	C	D	K	Weight kg Fan
EE661473	630	90S	520	403	434	61
EJ661474	630	100L	520	403	434	80
EJ661232	630	112M	520	403	434	92
EJ669201	630	160M	625	440	619	202

All dimensions in mm.

JM AEROFOIL PERFORMANCE AND ELECTRICAL DATA

380-420V/50HZ/3ϕ - L TYPE

PERFORMANCE CHART - 710 MM, 4 POLE

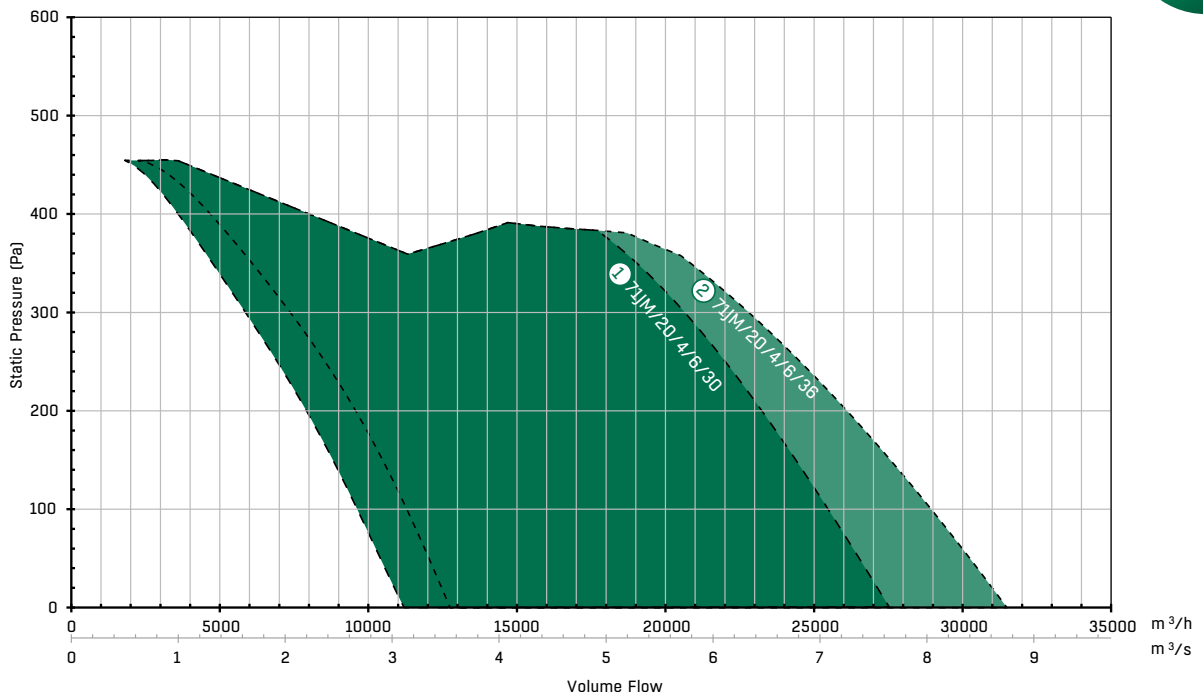

As standard 3 phase JM Aerofoils are supplied at the maximum pitch angle, the envelope curve above illustrates the pitch angle range available on request.

PERFORMANCE TABLE - 710 MM, 4 POLE

Ref	Product Code	m³/s @ Pa (Static)						
		0	50	100	150	200	250	300
1	71JM/20/4/6/30	7.64	7.36	7.07	6.77	6.45	6.11	5.73
2	71JM/20/4/6/36	8.74	8.4	8.03	7.65	7.25	6.81	6.33

PRODUCT AND ELECTRICAL DETAILS - 710 MM, 4 POLE

Ref	Product Code	Product Number	Pitch Angle (°)		Speed rev/min	Motor	Rating (kW)	Full Load Current (A)	Starting Current (A)	Wiring Diagram (CD)	Speed Controller			Sound Levels
			Min	Max							Electronic	Transformer	Inverter	
1	71JM/20/4/6/30	EE741471	8	30	1440	100L (IE2)	3.6	7.29	40.09	CD2416	N/A	N/A	IDDXF54-9	67
2	71JM/20/4/6/36	EJ741474	10	36	1440	112M (IE2)	4.8	9.7	49.4	CD2417	N/A	N/A	IDDXF54-9	69

For ErP efficiency ratings and grades please refer to our Fan Selector for more information. Sound pressure levels quoted are at the inlet, and are average dBA at 3m distance over a sphere at the mid point at the highest angle given, under free field conditions. These are presented for comparative purposes only. For speed controllers please see pages 250-297.

Non stocked JM Aerofoil are available in 10 working weeks, based on the parts availability. If a reduced lead time is required please contact the office.

Products in **bold** are available from our UK Distributors on next day delivery, if ordered by 4pm. Please call to confirm availability on 01206 222 580.

DRAWINGS - 710 MM

710 MM (EE741471 & EJ741474)

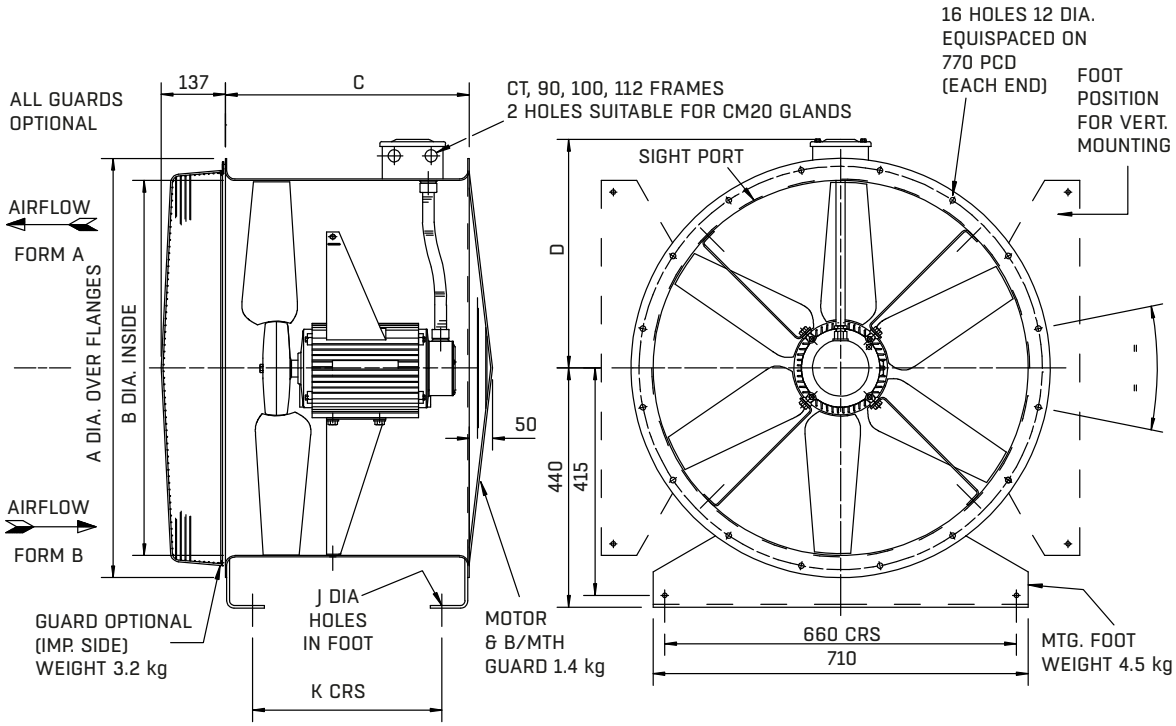

Product Number	Size	Motor Frame	A	B	C	D	J	K	Weight kg Fan
EE741471	710	100L	804	710	520	443	10	434	84
EJ741474	710	112M	804	710	520	443	10	434	95

All dimensions in mm.

JM AEROFOIL PERFORMANCE AND ELECTRICAL DATA

380-420V/50HZ/3ϕ - L TYPE

PERFORMANCE CHART - 800 MM, 4 POLE

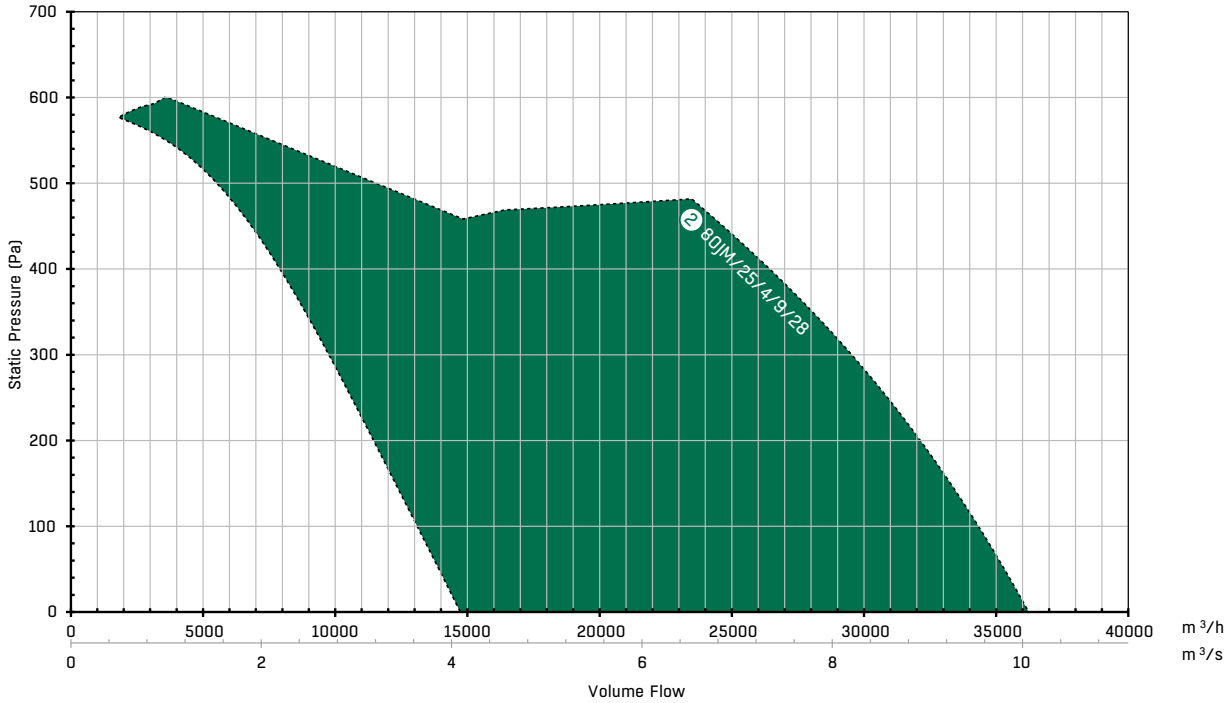

As standard 3 phase JM Aerofoils are supplied at the maximum pitch angle, the envelope curve above illustrates the pitch angle range available on request.

PERFORMANCE TABLE - 800 MM, 4 POLE

Ref	Product Code	m³/s @ Pa (Static)							
		0	50	100	150	200	250	300	400
1	**80JM/25/4/9/28**	**10.06**	**9.8**	**9.53**	**9.24**	**8.92**	**8.58**	**8.2**	**7.34**

PRODUCT AND ELECTRICAL DETAILS - 800 MM, 4 POLE

Ref	Product Code	Product Number	Pitch Angle (°)		Speed rev/min	Motor	Rating (kW)	Full Load Current (A)	Starting Current (A)	Wiring Diagram (CD)	Speed Controller			Sound Levels
			Min	Max							Electronic	Transformer	Inverter	
1	**80JM/25/4/9/28**	**EE831478**	**8**	**28**	**1455**	**132S (IE2)**	**6.33**	**12.6**	**76.25**	**CD2417**	N/A	N/A	**IDDXF54-15.5**	**71**

For ErP efficiency ratings and grades please refer to our Fan Selector for more information. Sound pressure levels quoted are at the inlet, and are average dBA at 3m distance over a sphere at the mid point at the highest angle given, under free field conditions. These are presented for comparative purposes only. For speed controllers please see pages 250-297.

Non stocked JM Aerofoil are available in 10 working weeks, based on the parts availability. If a reduced lead time is required please contact the office.

Products in **bold** are available from our UK Distributors on next day delivery, if ordered by 4pm. Please call to confirm availability on 01206 222 580.

DRAWINGS - 800 MM

800 MM (EE831478)

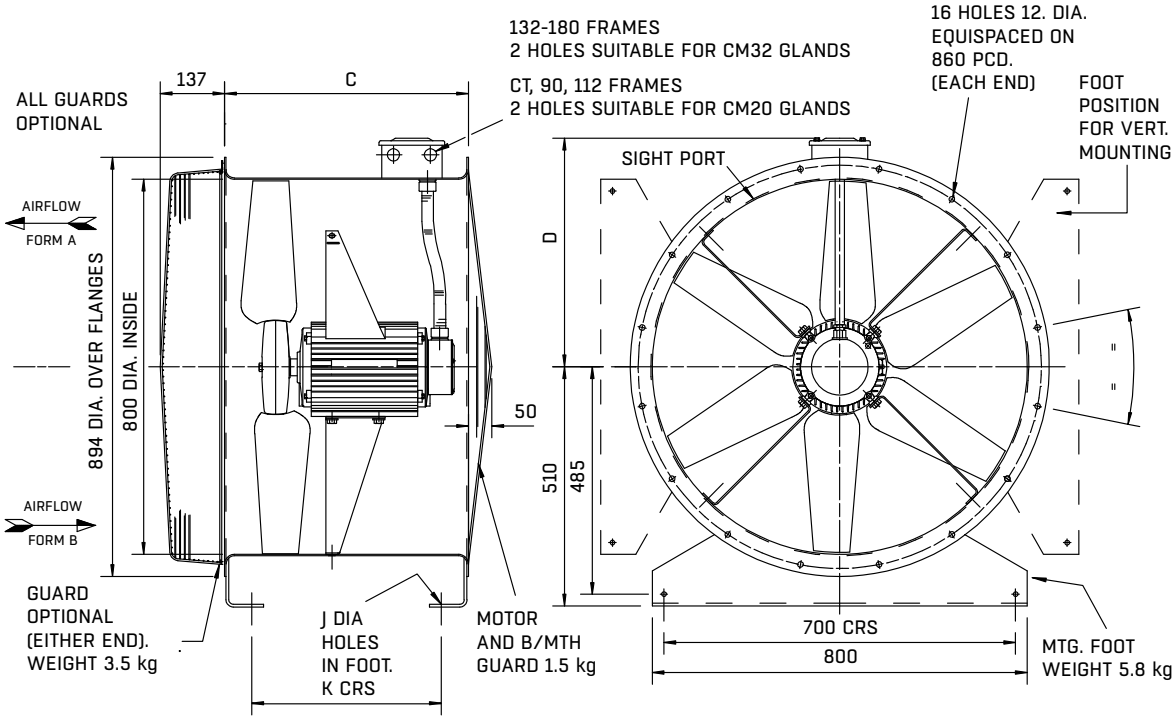

Product Number	Size	Motor Frame	C	D	J	K	Weight kg Fan
EE831478	800	132S	520	480	12	434	166

All dimensions in mm.

JM AEROFOIL PERFORMANCE AND ELECTRICAL DATA

380-420V/50HZ/3ϕ - L TYPE

PERFORMANCE CHART - 900 MM, 4 POLE

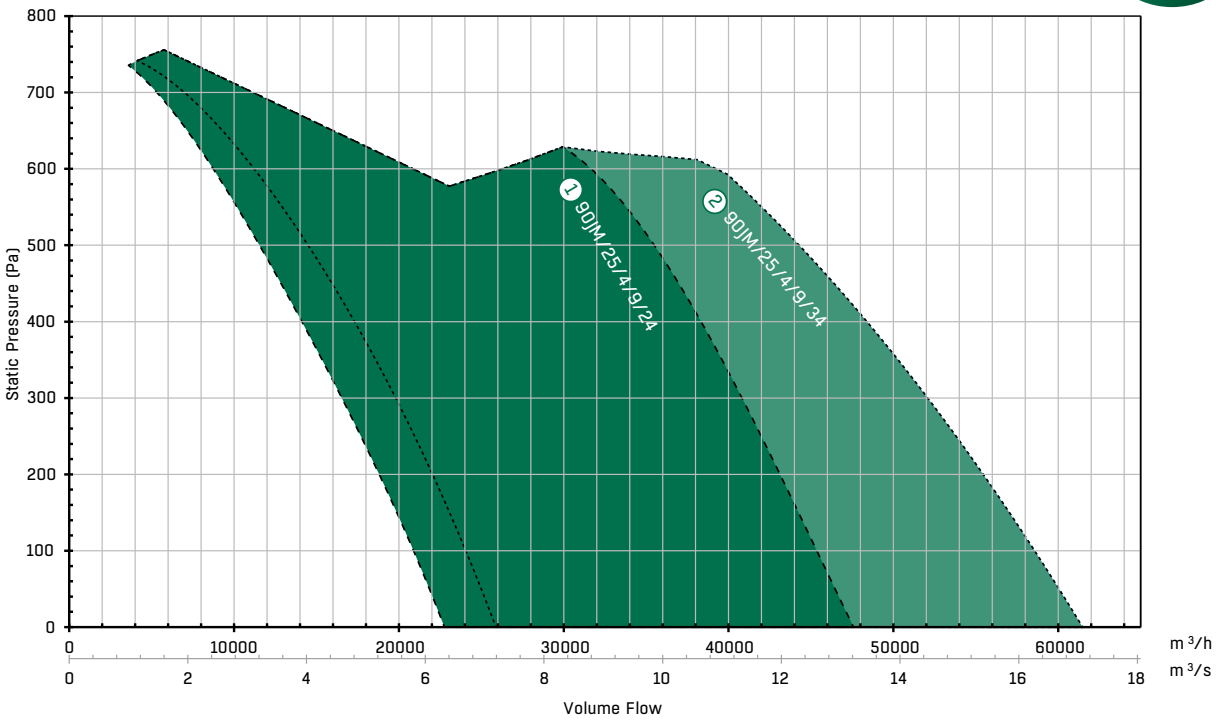

As standard 3 phase JM Aerofoils are supplied at the maximum pitch angle, the envelope curve above illustrates the pitch angle range available on request.

PERFORMANCE TABLE - 900 MM, 4 POLE

Ref	Product Code	m³/s @ Pa (Static)									
		0	50	100	150	200	250	300	400	500	600
1	**90JM/25/4/9/24**	**13.21**	**12.9**	**12.6**	**12.29**	**11.97**	**11.65**	**11.33**	**10.64**	**9.85**	**8.79**
2	**90JM/25/4/9/34**	**17.07**	**16.67**	**16.26**	**15.84**	**15.4**	**14.94**	**14.46**	**13.44**	**12.29**	

PRODUCT AND ELECTRICAL DETAILS - 900 MM, 4 POLE

Ref	Product Code	Product Number	Pitch Angle (°)		Speed rev/min	Motor	Rating (kW)	Full Load Current (A)	Starting Current (A)	Wiring Diagram (CD)	Speed Controller			Sound Levels
			Min	Max							Electronic	Transformer	Inverter	
1	**90JM/25/4/9/24**	**EE931473**	**8**	**24**	**1440**	**132M (IE2)**	**9**	**17.1**	**100.89**	**CD2417**	N/A	N/A	**IDDXF54-23**	**75**
2	**90JM/25/4/9/34**	**EJ931476**	**10**	**34**	**1440**	**160M (IE2)**	**13.2**	**25.3**	**135.7**	**CD2417**	N/A	N/A	**IDDXF54-31**	**77**

For ErP efficiency ratings and grades please refer to our Fan Selector for more information. Sound pressure levels quoted are at the inlet, and are average dBA at 3m distance over a sphere at the mid point at the highest angle given, under free field conditions. These are presented for comparative purposes only. For speed controllers please see pages 250-297.

Non stocked JM Aerofoil are available in 10 working weeks, based on the parts availability. If a reduced lead time is required please contact the office.

Products in **bold** are available from our UK Distributors on next day delivery, if ordered by 4pm. Please call to confirm availability on 01206 222 580.

DRAWINGS - 900 MM

900 MM (EE931473 & EJ931476)

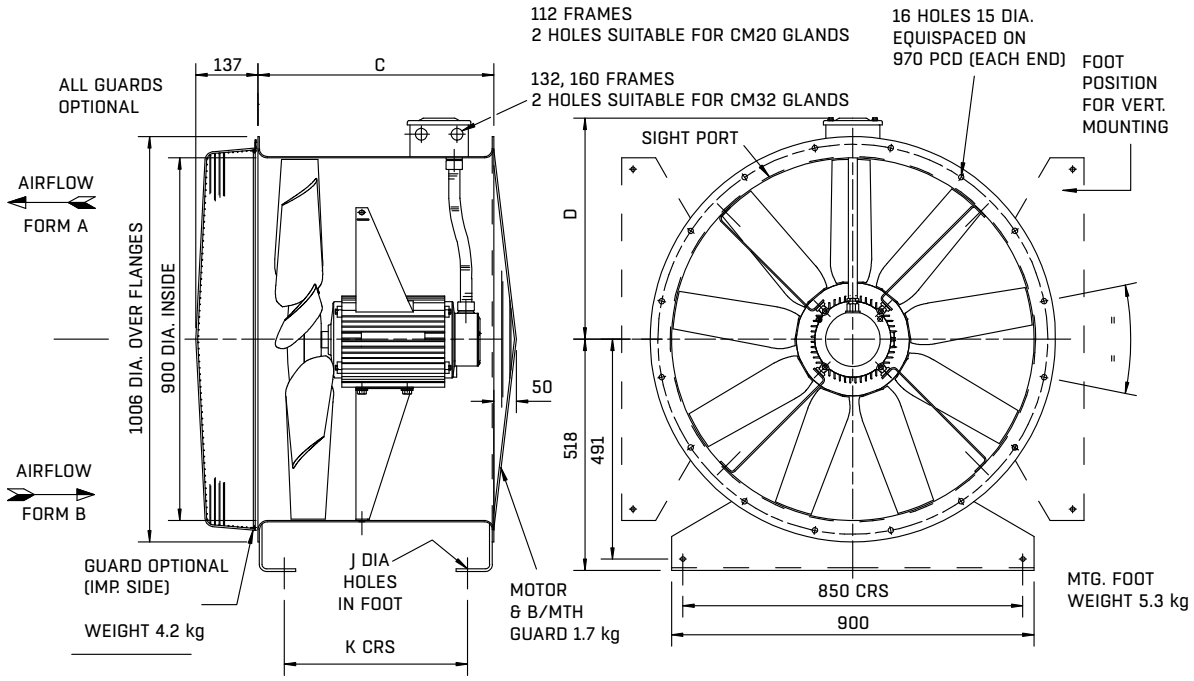

Product Number	Size	Motor Frame	C	D	J	K	Weight kg Fan
EE931473	900	132M	520	575	12	440	179
EJ931476	900	160M	625	575	12	545	248

All dimensions in mm.

JM AEROFOIL PERFORMANCE AND ELECTRICAL DATA

380-420V/50HZ/3ϕ - L TYPE

PERFORMANCE CHART - 1000 MM, 4 POLE

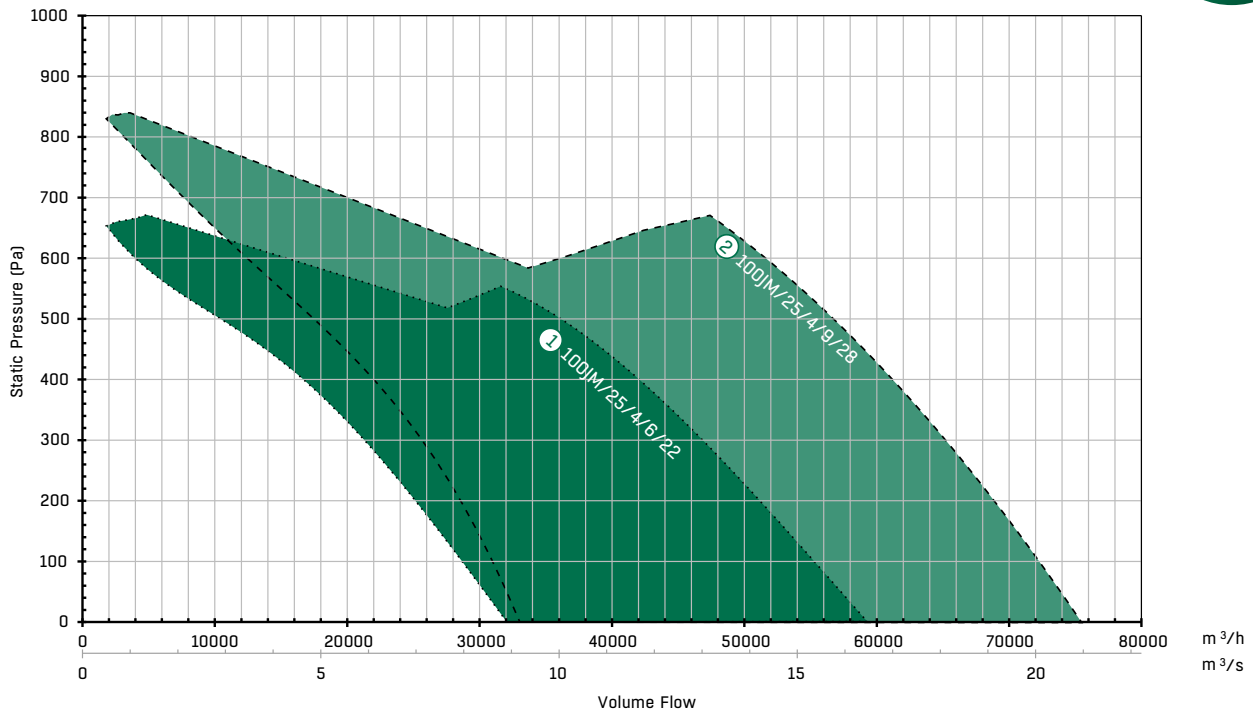

As standard 3 phase JM Aerofoils are supplied at the maximum pitch angle, the envelope curve above illustrates the pitch angle range available on request.

PERFORMANCE TABLE - 1000 MM, 4 POLE

Ref	Product Code	m³/s @ Pa (Static)									
		0	50	100	150	200	250	300	400	500	600
1	**100JM/25/4/6/22**	**16.46**	**15.91**	**15.35**	**14.78**	**14.21**	**13.62**	**13.01**	**11.68**	**10.04**	
2	**100JM/25/4/9/28**	**20.96**	**20.52**	**20.07**	**19.61**	**19.12**	**18.63**	**18.11**	**16.99**	**15.75**	**14.33**

PRODUCT AND ELECTRICAL DETAILS - 1000 MM, 4 POLE

Ref	Product Code	Product Number	Pitch Angle (°)		Speed rev/min	Motor	Rating (kW)	Full Load Current (A)	Starting Current (A)	Wiring Diagram (CD)	Speed Controller			Sound Levels
			Min	Max							Electronic	Transformer	Inverter	
1	**100JM/25/4/6/22**	**EE133472**	**8**	**22**	**1440**	**132M (IE2)**	**9**	**17.1**	**100.89**	**CD2417**	N/A	N/A	**IDDXF54-23**	**79**
2	**100JM/25/4/9/28**	**EE131475**	**8**	**28**	**1470**	**160L (IE2)**	**18**	**34.2**	**177.81**	**CD2417**	N/A	N/A	**IDDXF54-37**	**81**

Sound pressure levels quoted are at the inlet, and are average dBA at 3m distance over a sphere at the mid point at the highest angle given, under free field For ErP efficiency ratings and grades please refer to our Fan Selector for more information. These are presented for comparative purposes only. For speed controllers please see pages 250-297.

Non stocked JM Aerofoil are available in 10 working weeks, based on the parts availability. If a reduced lead time is required please contact the office.

Products in **bold** are available from our UK Distributors on next day delivery, if ordered by 4pm. Please call to confirm availability on 01206 222 580.

DRAWINGS 1000 MM

1000 MM (EE133472 & EE131475)

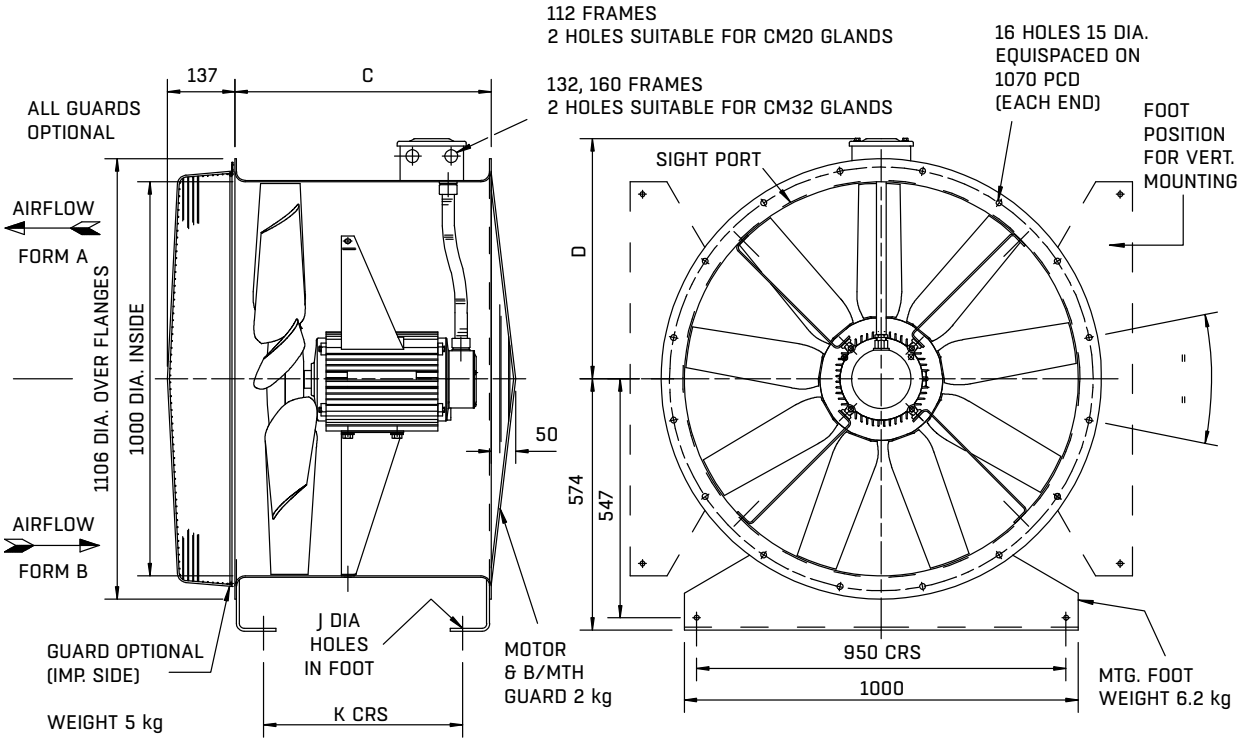

Product Number	Size	Motor Frame	C	D	J	K	Weight kg Fan
EE133472	1000	132M	520	625	12	440	218
EE131475	1000	160L	711	625	12	629	295

All dimensions in mm.

WIRING DIAGRAMS - JM AEROFOIL

CD2416

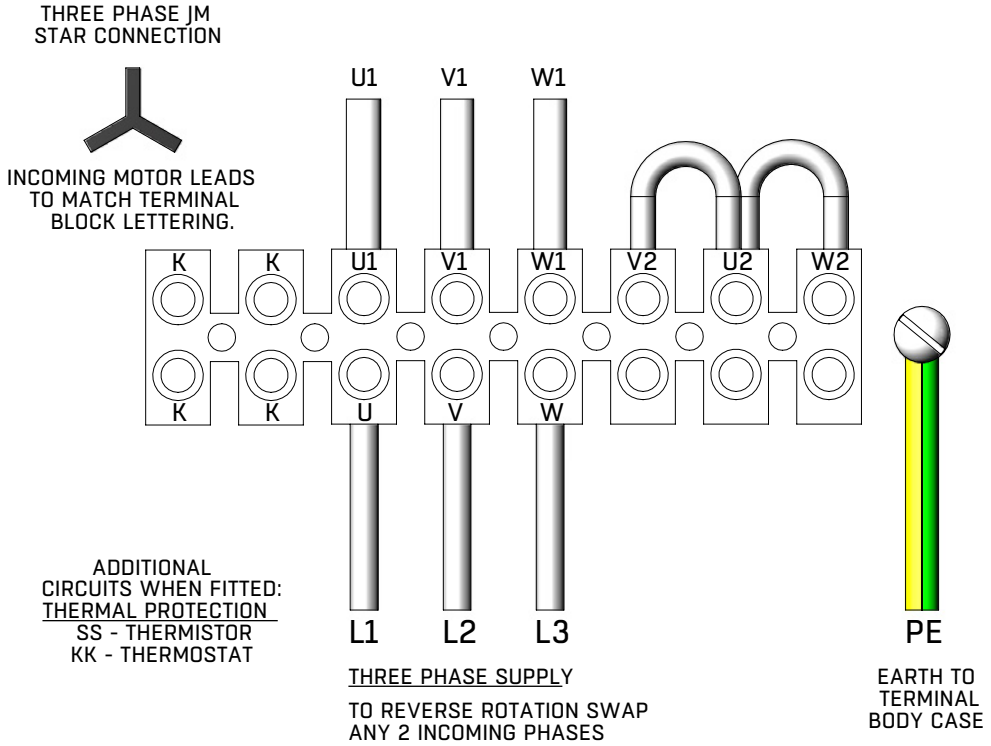

CD2417

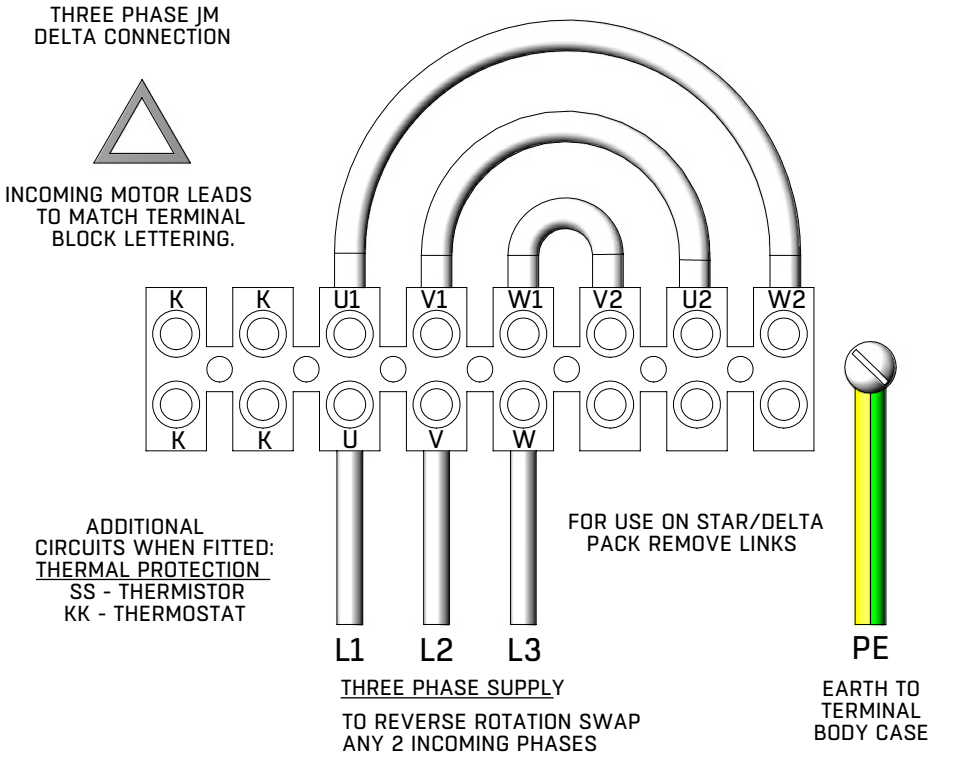

WIRING DIAGRAMS - JMV AEROFOIL

CD3018

CONNECTION DIAGRAM FOR THREE PHASE DUAL VOLTAGE, STAR
ACDE ROTATION

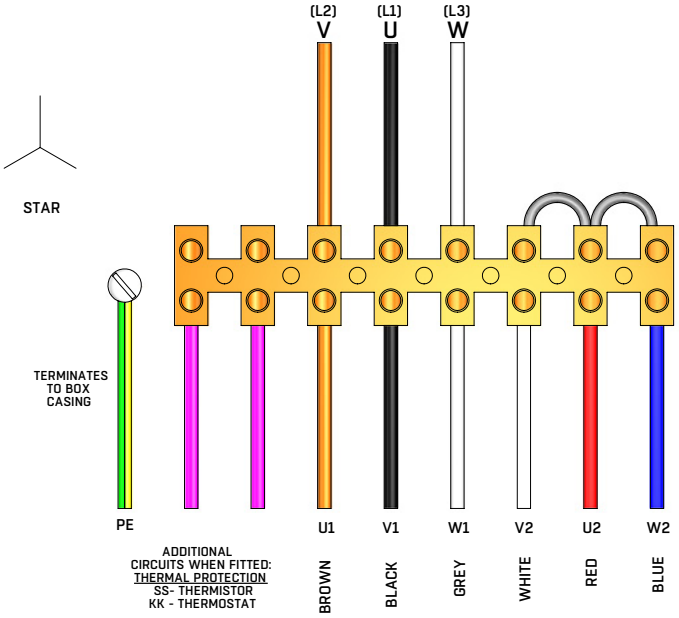

INCOMING MOTOR LEADS TO MATCH TERMINAL BLOCK LETTERING

CD3020

CONNECTION DIAGRAM FOR THREE PHASE DELTA FIXED SPEED
ACDE ROTATION

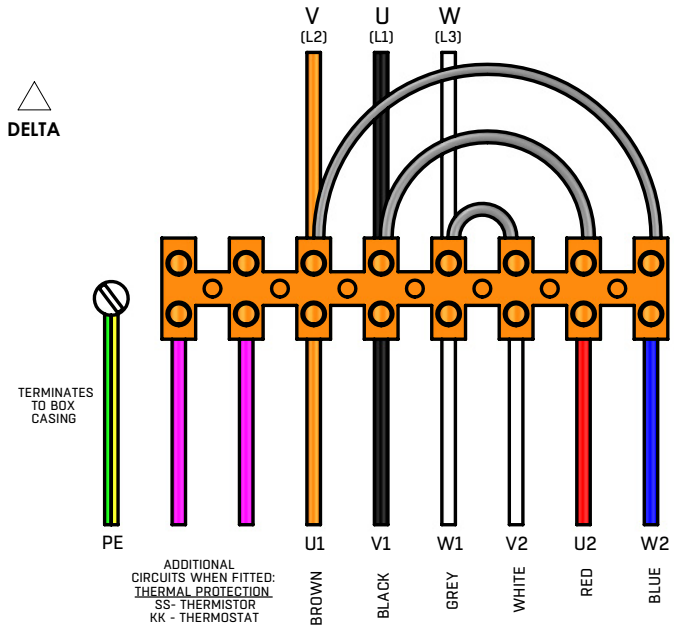

INCOMING MOTOR LEADS TO MATCH TERMINAL BLOCK LETTERING

WIRING DIAGRAMS - JM AEROFOIL

CD3033 - JM 1 PHASE (CONNECTED TEID 1A)

JM CONNECTED TO TEID 1A TRANSFORMER SPEED CONTROLLER

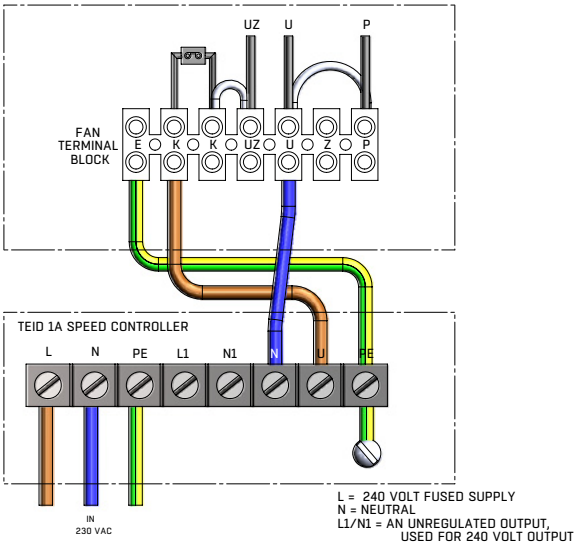

CD3035 - JM 1 PHASE (CONNECTED TEID 1.5-2.2A)

JM CONNECTED TO TEID 1.5-2.2A TRANSFORMER SPEED CONTROLLER

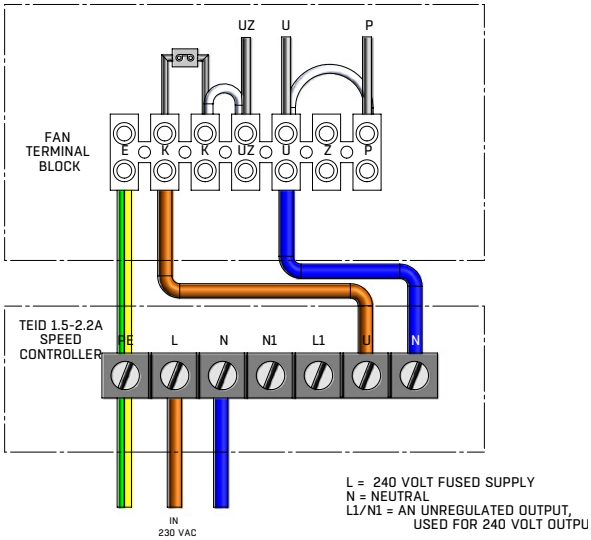

CD3034 - JM 1 PHASE (CONNECTED TEID 3.5-5.5A)

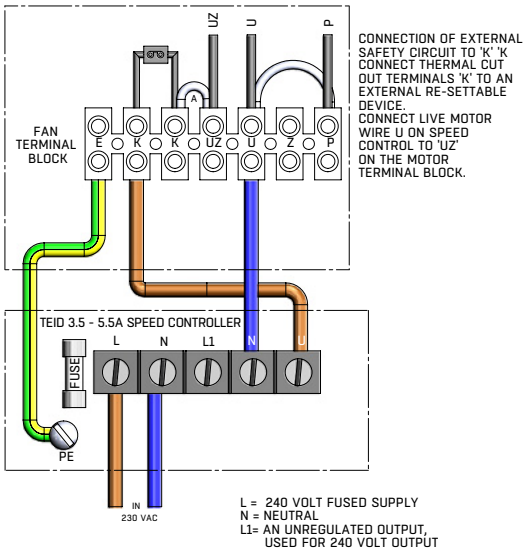

CD3034 - JM 1 PHASE (CONNECTED TEID 7.5-13A)

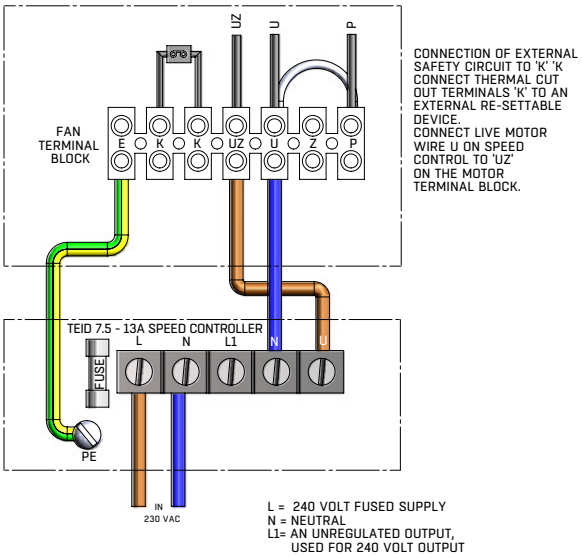

WIRING DIAGRAMS - JM AEROFOIL

CD3038 - 315-500 JM 1 PHASE (WITHOUT AND WITH ME SPEED CONTROLLER)

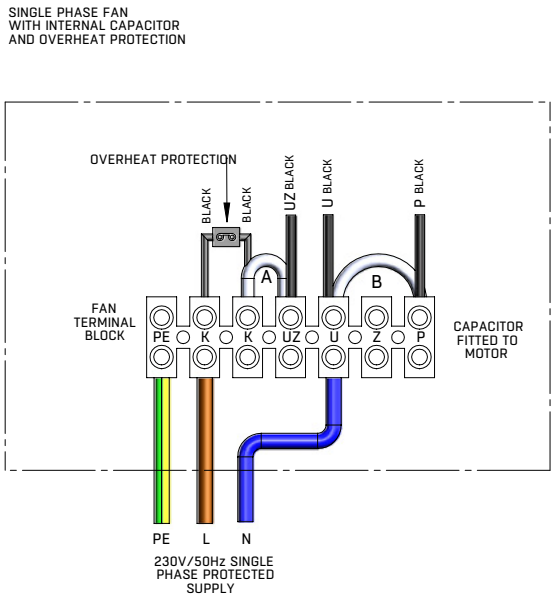

FAN CONNECTED TO SUPPLY (FULL SPEED)

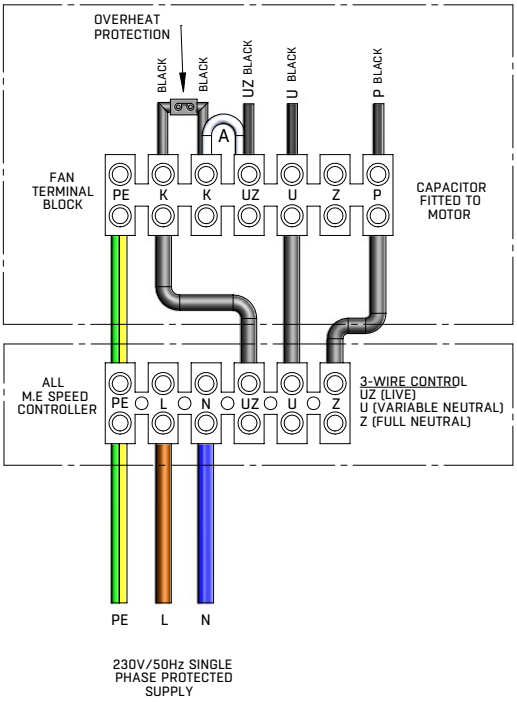

FAN CONNECTED TO SPEED CONTROLLER (VARIABLE SPEED)

CD3037 - 560-630 JM 1 PHASE (WITHOUT AND WITH ME SPEED CONTROLLER)

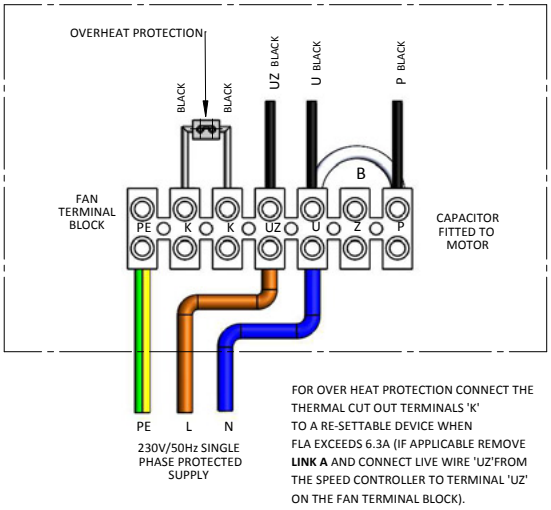

FAN CONNECTED TO SUPPLY (FULL SPEED)

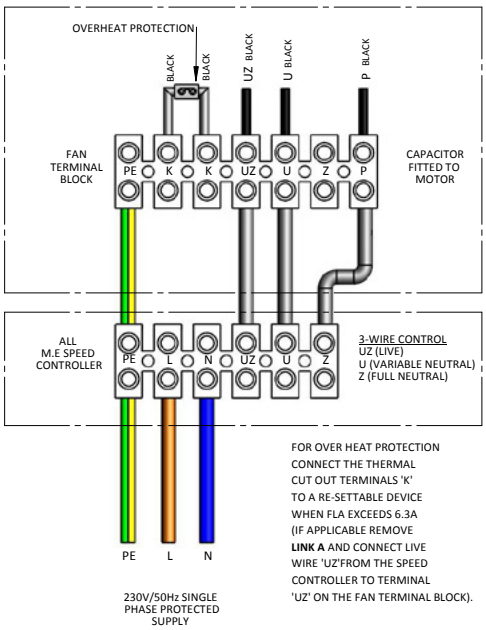

FAN CONNECTED TO SPEED CONTROLLER (VARIABLE SPEED)

HIGH EFFICIENCY CASED AXIAL
JMv AEROFOIL

PRODUCT FACTS

- Volume up to 3.95 m^3/s
- Static pressures up to 285 Pa
- Fans tested to ISO5801 and BS848
- High energy efficiency
- Low installed noise levels
- Motor protection and terminal block IP55
- Overheat protection fitted as standard

ELECTRICAL SUPPLY

220-240V/50Hz/1ϕ

TEMPERATURE RANGE

-40°C to 50°C as standard.
50°C to 70°C must be run at full speed only

SIZES

315, 355, 400, 450, 500, 560 and 630 mm

IMPELLERS

Our impeller design includes features such as unique high efficiency, high twist aerofoil section blades. Which are fitted into an aerodynamically optimised hub and clamp plate, that allows pitch angles to be adjusted. Woods impellers are all high pressure die cast to offer thin aerofoil sections for low generation of noise. Every cast aluminium component is X-ray examined using Real Time Radiography inspection prior to assembly. The maximum pitch angles shown allow for speed control by transformer or electronic controllers.

MOTORS

All motors are totally enclosed air stream rated class F insulation.

Constructed from aluminium or cast iron as standard, with special 'T' slot or pad mounted fixings. Single speed, single phase motors are suitable for speed control by voltage regulation where indicated. Suitable for horizontal or vertical shaft operation. Supplied as IP55 as standard, with removable drain plugs.

Bearings are of the "sealed for life" type and are lubricated with wide temperature range grease designed for optimal performance. Our BT and CT frames are fitted with overheat protection which is provided by a thermostat as standard.

CASING

JMv Aerofoil fans are available in a long cased form, complete with an externally mounted pre-wired electrical terminal box. Casings are spun from sheet steel with integral pre-drilled and radiused inlet flanges. The galvanised finish gives a high resistance to corrosion and is ideal for external as well as internal use.

PRODUCT CODE

63JMv/20/4/6/35

- 63 - denotes the fan impeller diameter in centimetres
- JMv - denotes fan type
- 20 - denotes impeller hub diameter in centimetres
- 4 - denotes a nominal 4 pole speed
- 6 - denotes the number of blades
- 35 - denotes the pitch angle for the required duty

ACCESSORIES (Pages 230-237) - CONTROLLERS (Pages 249-297)


Damper

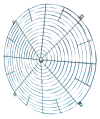
Guard


Bellmouth


Flange


Mounting Feet


Rubber AV's


Spring AV's


Flexible Connector


Silencer


Controls Transformer


Controls Electronic

JMv PERFORMANCE & ELECTRICAL DATA

220-240V/50HZ/1ϕ - L TYPE

PERFORMANCE CHART

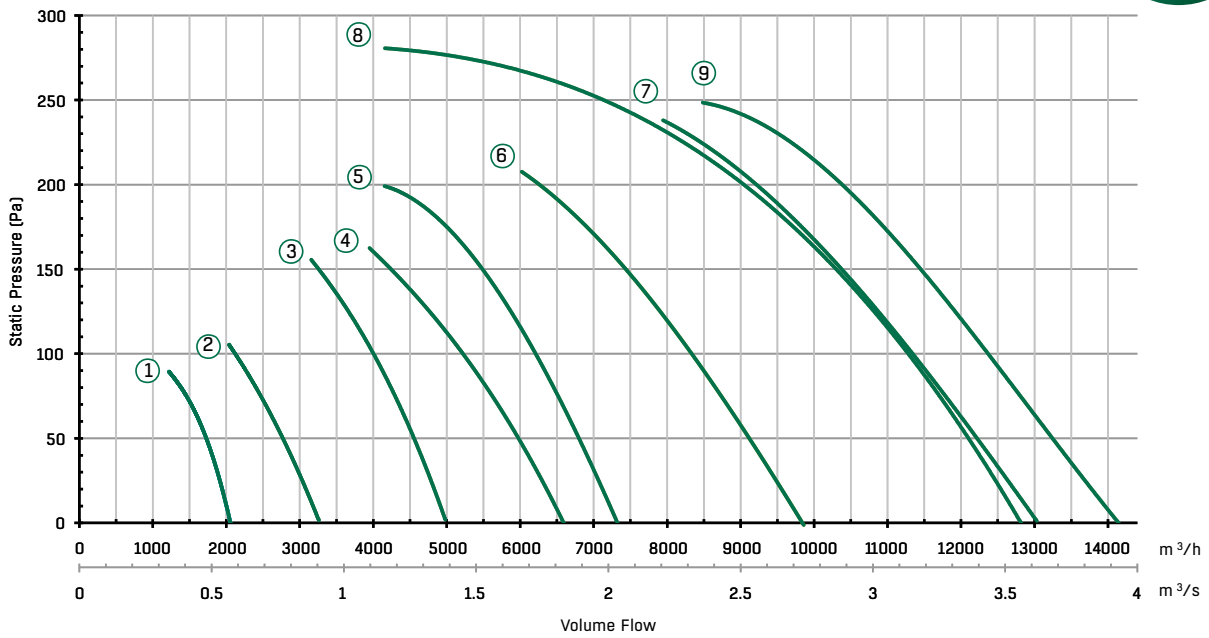

PERFORMANCE TABLE

Ref	Product Code	m³/s @ Pa (Static)					
		0	50	100	150	200	250
1	31JMv/14/4/6/29	0.57	0.48				
2	35JMv/14/4/6/31	0.9	0.76	0.58			
3	40JMv/16/4/6/32	1.38	1.26	1.10	0.90		
4	45JMv/16/4/6/28	1.83	1.66	1.45	1.18		
5	50JMv/20/4/6/18	2.04	1.88	1.72	1.52	1.16	
6	50JMv/20/4/6/30	2.74	2.52	2.32	2.07	1.74	
7	56JMv/20/4/6/25	3.61	3.39	3.14	2.88	2.56	
8	63JMv/20/4/6/10	3.58	3.34	3.12	2.85	2.54	1.96
9	63JMv/20/4/6/13	3.93	3.67	3.43	3.18	2.88	

PRODUCT AND ELECTRICAL DETAILS

Ref	Product Code	Product Number	Pitch Angle (°)		Speed rev/min	Motor	Rating (kW)	Full Load Current (A)	Starting Current (A)	Wiring Diagram	Speed Controller	
			Min	Max							Electronic	Transformer
1	31JMv/14/4/6/29	JV326460	25	29	1340	BT5	0.075	0.53	1.45	CD3022	ME1.1	TEID 1
2	35JMv/14/4/6/31	JV366460	29	31	1340	BT4	0.13	1.05	1.75	CD3022	ME1.3	TEID 1.5A
3	40JMv/16/4/6/32	JV416452	26	32	1400	BT9	0.25	1.56	3.45	CD3022	ME1.3	TEID 2.2A
4	45JMv/16/4/6/28	JV466466	21	28	1340	BT9	0.32	2.2	5.0	CD3022	ME1.3	TEID 2.2A
5	50JMv/20/4/6/18	JV516455	16	18	1340	CT5	0.39	2.9	5.6	CD3022	ME1.3	TEID 3.5A
6	50JMv/20/4/6/30	JV516466	24	30	1340	CT9	0.68	4.8	11.0	CD3022	ME1.6	TEID 5.0A
7	56JMv/20/4/6/25	JV576456	19	25	1340	CT9	0.97	6.9	13.5	CD3022	ME1.6	TEID 7.5A
8	63JMv/20/4/6/10	JV646453	8	10	1340	CT9	0.97	6.9	13.5	CD3022	ME1.6	TEID 7.5A
9	63JMv/20/4/6/13	JV646454	8	13	1340	CT9	0.97	6.9	13.5	CD3022	ME1.6	TEID 7.5A

For ErP efficiency ratings and grades please refer to our Fan Selector for more information. For speed controllers please see pages 219-267.

Products in **bold** are available from our UK Distributors on next day delivery, if ordered by 4pm. Please call to confirm availability on 01206 222 580.

DRAWINGS

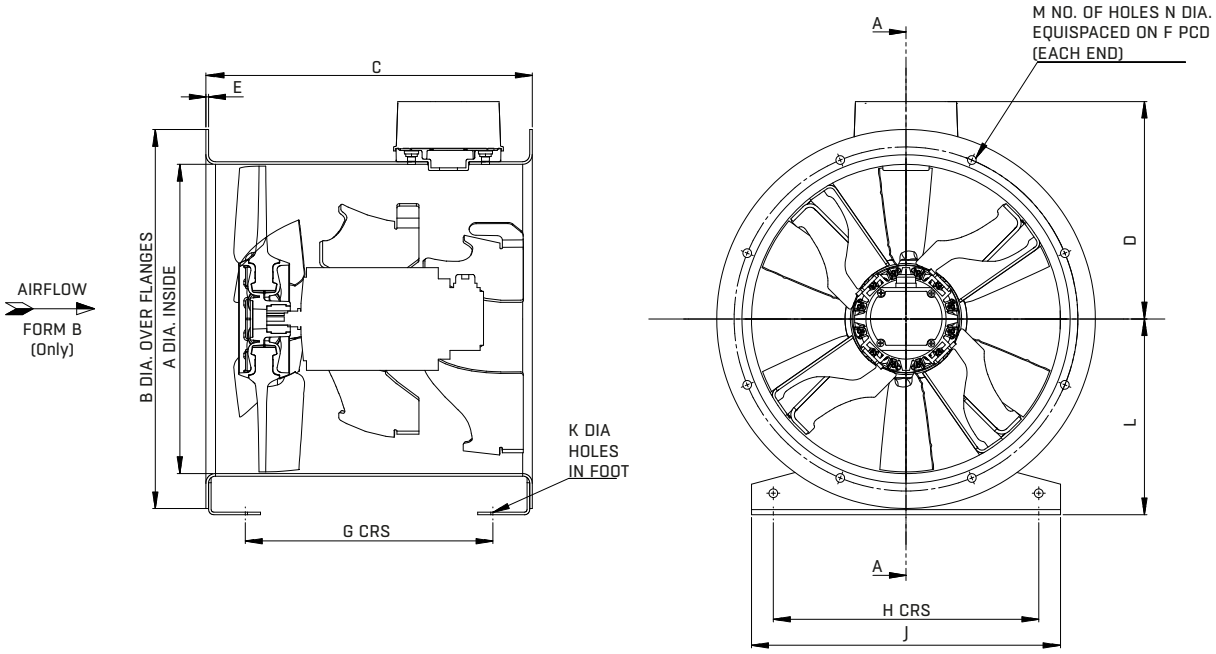

Product Code	Motor frame	A	B	C	D	E	F	G	H	J	K	L	M	N	Weight (KG)
315	BT5	315	395	375	229.5	3	355	285	265	315	10	200	8	10	21
355	BT4	355	435	375	249.5	3	395	285	305	355	10	225	8	10	22
400	BT9	400	480	375	272	3	450	285	350	400	10	250	8	10	25
450	BT9	450	530	375	297	3	500	275	400	450	10	280	8	12	26
500	CT5	500	594	520	322	3	560	420	450	500	10	315	12	12	46
560	CT9	560	654	520	352	3	620	420	510	560	10	355	12	12	54
630	CT9	630	724	520	387	3	690	400	580	630	16	400	12	12	73

All dimensions in mm.

WIRING DIAGRAMS - JMV AEROFOIL

CD3022 - 315-500 JMv 1 PHASE (WITHOUT AND WITH ME SPEED CONTROLLER)

CONNECTION DIAGRAM FOR SINGLE PHASE REMOTE OVERHEAT PROTECTION ACDE ROTATION

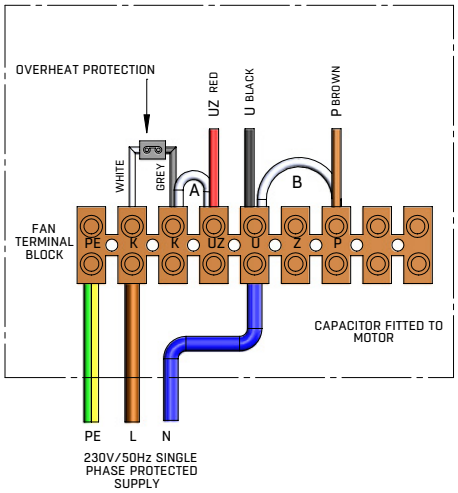

FAN CONNECTED TO SUPPLY (FULL SPEED)

FAN CONNECTED TO SPEED CONTROLLER (VARIABLE SPEED)

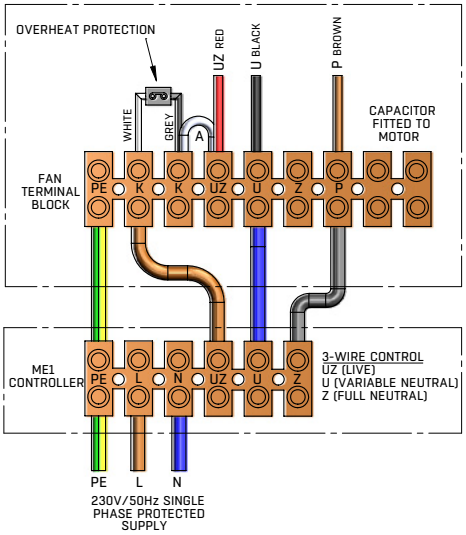

FAN CONNECTED TO SPEED CONTROLLER (VARIABLE SPEED)

CD3022 - 560-630 JMv 1 PHASE (WITHOUT AND WITH ME SPEED CONTROLLER)

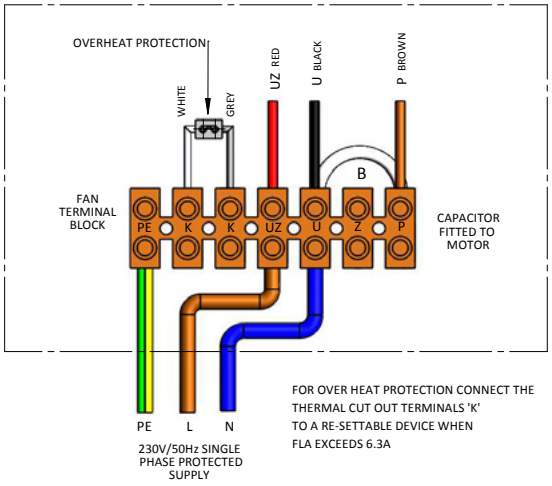

FAN CONNECTED TO SUPPLY (FULL SPEED)

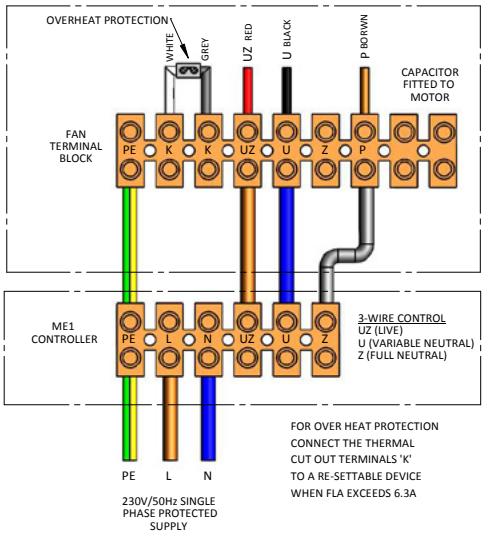

FAN CONNECTED TO SPEED CONTROLLER (VARIABLE SPEED)

HIGH PERFORMANCE CASED AXIAL
MAXFAN²

PRODUCT FACTS

- Volume up to 7.28 m³/s
- Static pressures up to 1082 Pa
- Fans tested to ISO5801 and BS848
- High energy efficiency
- Low installed noise levels
- Motor protection and terminal block IP55
- Overheat protection fitted as standard

ELECTRICAL SUPPLY

220-240V/50Hz/1ϕ & 380-420V/50Hz/3ϕ

TEMPERATURE RANGE

-40°C to 50°C as standard
BT or CT motors can be continuously operated at temperatures up to 70°C

SIZES

400, 450, 500, 560 and 630 mm

IMPELLERS

A unique high efficiency aerofoil section blade with a smoothed hub and clamp plate for adjustable pitch angle availability.

Woods impellers are all high pressure die cast to offer thin aerofoil sections for low generation of noise. Every cast aluminium component is X-ray examined using Real Time Radiography prior to assembly.

MOTORS

All motors are totally enclosed air stream rated class F insulation. Constructed from aluminium as standard with special 'T' slot or pad mounted fixings. Motors are suitable for speed control.

Suitable for horizontal through to vertical shaft operation. Supplied IP55, with removable drain plugs.

Three phase motors are cast iron and are suitable for use with frequency inverters, suitable for turn down to 20% of maximum speed.

Sealed for life bearings lubricated with wide temperature range grease. Motors are fitted with overheat protection which is provided by a thermostat or thermistor as standard (depending on motor).

CASING

MaXfan² are available fully cased, complete with an externally mounted pre-wired electrical terminal box. Casings are spun from sheet steel with integral pre-drilled and radiused inlet flanges. The galvanised finish gives a high resistance to corrosion and is ideal for external as well as internal use.

PRODUCT CODE

50-1 MaXfan²

- 50 - denotes the fan impeller diameter in centimetres
- 1 - denotes electrical phase
- MaXfan² product type

ACCESSORIES (Pages 230-237) - CONTROLLERS (Pages 249-297)


Mounting Feet


Rubber AV's


Flexible Connector


Flange


Silencer


Controls Transformer


Controls Electronic


Controls Inverter


Acoustic Jacket

MAXFAN² PRODUCT PERFORMANCE & ELECTRICAL DATA

220-240V/50HZ/1ϕ & 380-420/50HZ/3ϕ – L TYPE

PERFORMANCE CHART

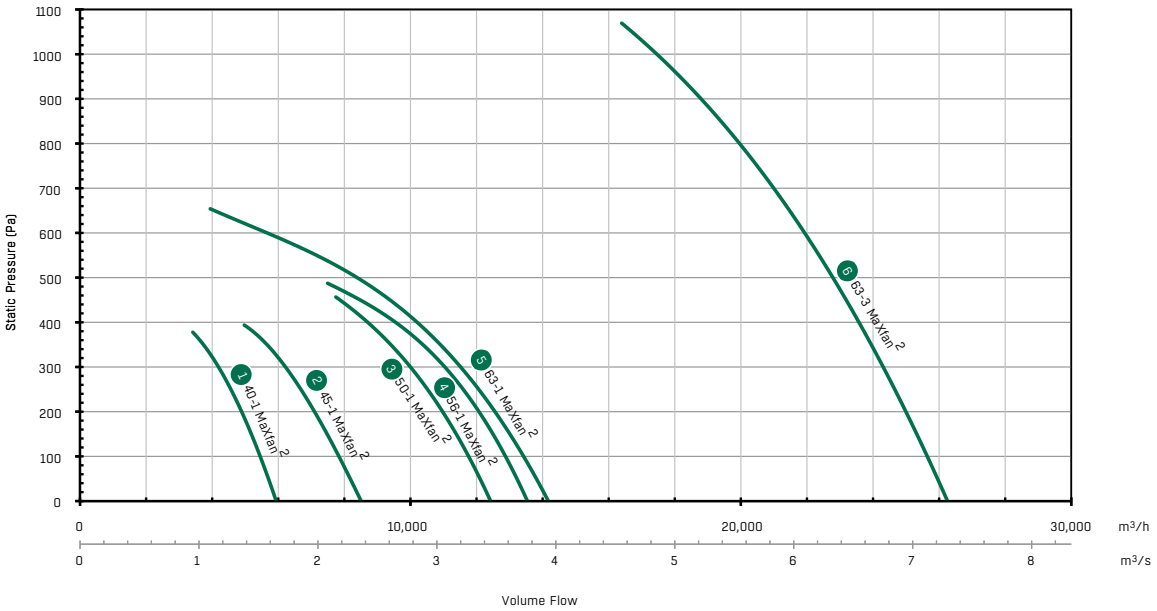

PERFORMANCE TABLE

Ref	Product Code	m³/s @ Pa (Static) 0	50	100	150	200	250	300	400	500	600	700	800	900	1000
1	40-1 MaXfan2/16/4/5/37/30	1.64	1.58	1.51	1.43	1.35	1.26	1.16							
2	45-1 MaXfan2/16/4/5/37/30	2.36	2.27	2.17	2.07	1.97	1.85	1.72							
3	50-1 MaXfan2/16/4/5/42/36	3.45	3.36	3.26	3.16	3.04	2.92	2.77	2.41						
4	56-1 MaXfan2/20/4/6/30/26	3.76	3.67	3.57	3.47	3.35	3.22	3.06	2.65						
5	63-1 MaXfan2/16/4/5/19/18	3.93	3.83	3.72	3.61	3.48	3.35	3.19	2.83	2.33	1.57				
6	*63-3 MaXfan2/25/4/9/40/32	7.28	7.16	7.05	6.95	6.87	6.78	6.67	6.46	6.27	6.01	5.76	5.49	5.2	4.81

PRODUCT AND ELECTRICAL TABLE

Ref	Product Code	Product Number	Pitch Angle (°) Min	Max	Speed rev/min	Phase	Motor	Rating (kW) Per Stage	Rating (kW) (Total)	Full Load Current (A) (Total)	Starting Current (A) (Total)	Wiring Diagram	Speed Controller Electronic	Transformer	Inverter	Sound Levels
1	40-1 MaXfan2/16/4/5/37/30	EQ411463	37	30	1420	1	BT9 (IE1)	0.32	0.64	4.4	10.0	CD3027	ME1.6	TEDS 5A	N/A	64
2	45-1 MaXfan2/16/4/5/37/30	EQ461477	37	30	1380	1	CT5 (IE1)	0.52	1.04	7.8	15.6	CD3027	ME1.12	TEDS 7.5A	N/A	68
3	50-1 MaXfan2/16/4/5/42/36	EQ511467	42	36	1380	1	CT9 (IE1)	0.97	1.94	13.8	27	CD3037	ME1.12	TEDS 13A	N/A	75
4	56-1 MaXfan2/20/4/6/30/26	EQ571460	30	26	1380	1	CT9 (IE1)	0.97	1.94	13.8	27	CD3037	ME1.12/16	TEDS 13A	N/A	76
5	63-1 MaXfan2/16/4/5/19/18	EQ641406	19	18	1350	1	CT9 (IE1)	0.97	1.94	13.8	27	CD3037	ME1.12/16	TEDS 13A	N/A	78
6	*63-3 MaXfan2/25/4/9/40/32	EE661476	40	32	1440	3	112 (IE2)	4.8	9.6	19.4	98.8	ENQ	N/A	N/A	IDDXF54 23	79

For ErP efficiency ratings and grades please refer to our Fan Selector for more information. For speed controllers please see pages 250-297.

Sound pressure levels quoted are at the inlet, and are average dBA at 3m distance over a sphere at the mid point at the highest angle given, under free field conditions. These are presented for comparative purposes only. *3 phase only.

Products in **bold** are available from our UK Distributors on next day delivery, if ordered by 4pm. Please call to confirm availability on 01206 222 580.

DRAWINGS

MAXFAN² 40-1, 45-1 AND 63-3

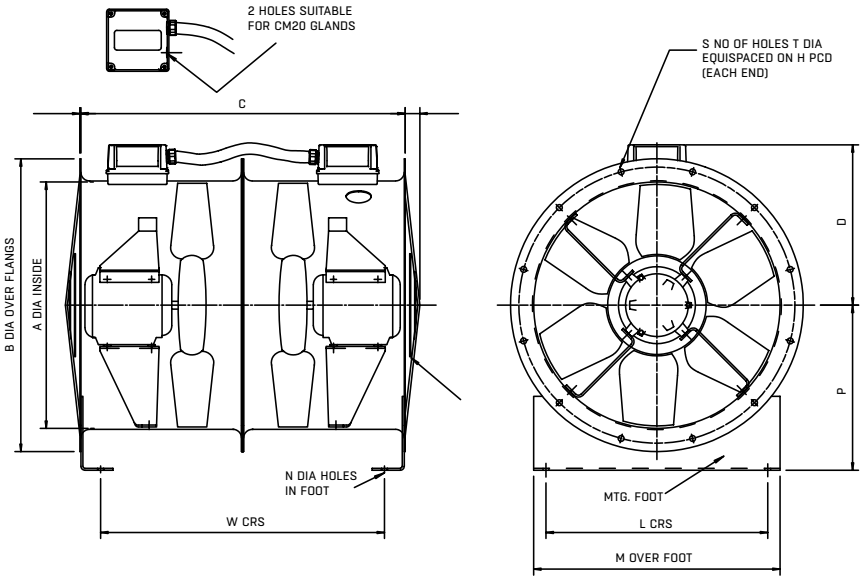

Product Code	Motor	A	B	C	D	E	H	L	M	N	P	S	T	V	W	Weight (kg)
40-1 MaXfan²	BT9	400	480	680	279	2.5	450	350	400	10	250	8	12	30	660	44
45-1 MaXfan²	CT5	450	530	620	306	2.5	500	400	450	10	280	8	12	30	571	44
63-3 MaXfan²	112	630	724	1040	403	3	690	580	630	10	400	12	12	50	954	155

MAXFAN² 50-1, 56-1 AND 63-1

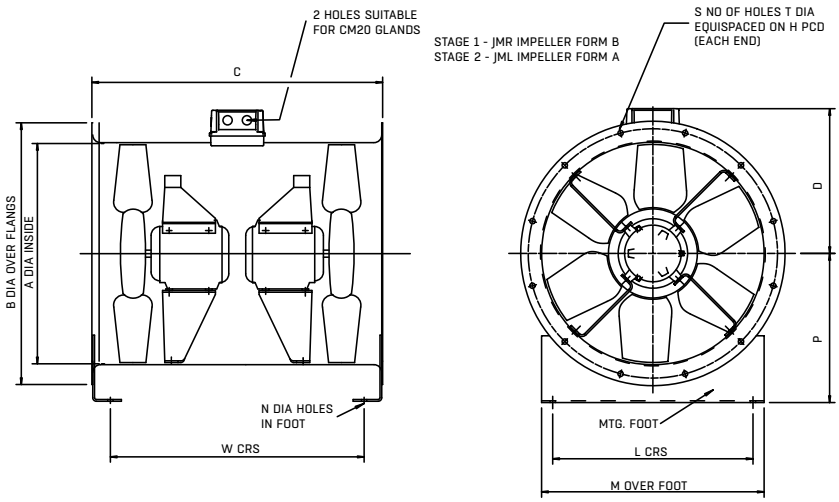

Product Code	Motor	A	B	C	D	H	L	M	N	P	S	T	W	Weight (kg)
50-1 MaXfan²	CT9 (IE1)	500	594	710	338	560	450	500	10	315	12	12	620	57
56-1 MaXfan²	CT9 (IE1)	560	654	680	368	620	510	560	10	355	12	12	590	61
63-1 MaXfan²	CT9 (IE1)	630	724	710	403	690	580	630	10	400	12	12	624	71

All dimensions in mm.

WIRING DIAGRAMS - MAXFAN²

1 Phase only (3 phase enquire)

CD3037 - 500-630 MAXFAN²

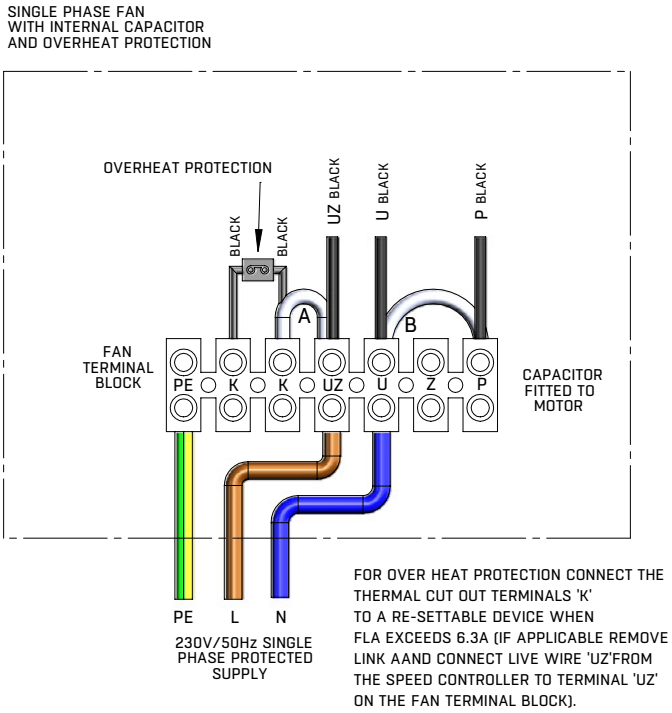

FAN CONNECTED TO SUPPLY (FULL SPEED)

CD3037 - 400-630 MAXFAN² (ME SPEED CONTROLLER)

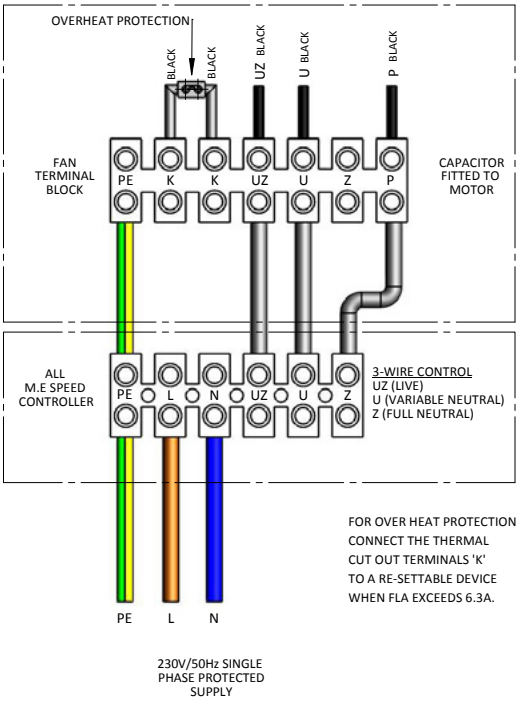

FAN CONNECTED TO SPEED CONTROLLER (VARIABLE SPEED)

WIRING DIAGRAMS - MAXFAN²

1 Phase only (3 phase enquire)

CD3027 - 400-450 MAXFAN²

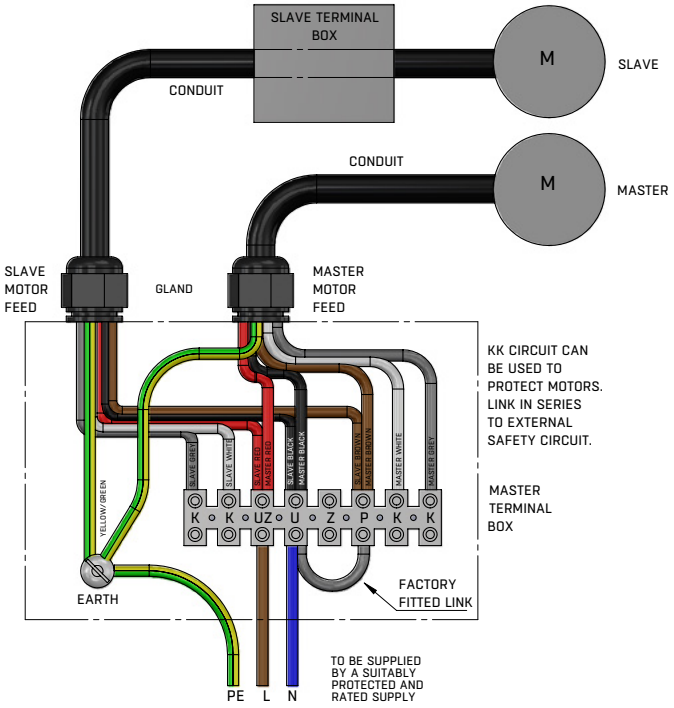

CD3034 - 400-630 MAXFAN² (TEID SPEED CONTROLLER)

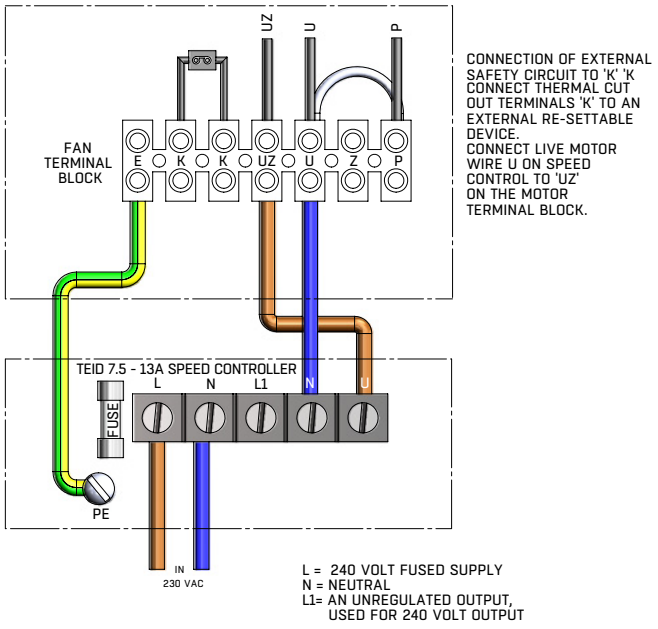

INTRODUCING THE NEW MAXFAN COMPAC

THE NEW SOLUTION FOR COMMERCIAL KITCHEN EXTRACT

HIGH PERFORMANCE AND PRESSURE WITH FULL INVERTER CONTROL

Designed and Manufactured in the UK

DESIGNED FOR THE KITCHEN CANOPY MARKET OFFERING **HIGH PRESSURE & PERFORMANCE**, WITH QUALITY YOU CAN TRUST.....

- 315 - 630 mm diameter
- Volumes up to 4.9m³/s
- Static Pressures up to 900 Pa (Non-stalling characteristic)
- High efficiency energy saving IE2 motor
- Low breakout noise levels
- Ambient temperatures up to 80°C (dependent on size)
- Overheat protection as standard
- Compact robust light weight construction
- Galvanised casing for high corrosion resistance
- Full inverter control and flexibility
- Electrical supply 1 Phase 220 - 240 volts
- Pre programmed controls for easy installation

HIGH PERFORMANCE CASED AXIAL
MAXFAN COMPAC

PRODUCT FACTS

- Volumes up to 4.9m³/s
- Static Pressures up to 900 Pa (Non-stalling characteristic)
- Fans tested to ISO5801 and BS848
- High efficiency energy saving IE2 motor
- Low breakout noise levels
- Motor protection and terminal block IP55 (DW172 & Defra Compliant)
- Ambient temperatures up to 80°C (dependent on size)
- Overheat protection as standard
- Compact robust light weight construction
- Galvanised casing for high corrosion resistance
- Full inverter control and flexibility

ELECTRICAL SUPPLY

230v/50Hz/1 Ph (3 Ph Motor) - L Type

TEMPERATURE RANGE

Suitable for temperatures up to 80°C*
*dependent on the fan size, please refer to the specific fan technical page.

SIZES

315, 355, 400, 450, 500, 560 and 630 mm

IMPELLERS

A unique high efficiency aerofoil section blade with a smoothed hub and clamp plate offers a high efficiency solution.

Woods impellers are all high pressure die cast to offer thin aerofoil sections for low generation of noise. Every cast aluminium component is X-ray examined using Real Time Radiography inspection prior to assembly. The maximum pitch angles shown allow for speed control by frequency inverter.

MOTORS

All motors are totally enclosed air stream rated with class F insulation. Constructed from aluminium or cast iron as standard with special pad mounted fixings. Although this product incorporates a three phase electric motor, by using a matched inverter solution it is suitable for use with a single phase electrical supply on site. In addition, using a frequency inverter allows the speed to be turned down to 20% of maximum speed. Suitable for horizontal or vertical shaft operation. Supplied IP55, with removable drain plugs.

Sealed for life bearings lubricated with wide temperature range grease. The complete range of motors are fitted with Thermistor OHP as standard. Motors are IE2 efficiency class as standard.

CASING

The MaXfan Compac is available with a galvanised casing, complete with an externally mounted pre-wired electrical terminal box. Casings are spun from sheet steel with integral pre-drilled and radiused inlet flanges. The galvanised finish gives a high resistance to corrosion and is ideal for external as well as internal use.

PRODUCT CODE

40 MaXfan Compac

- 40 - denotes the fan impeller diameter in centimetres

ACCESSORIES (Pages 230-237) - **CONTROLLERS** (Pages 249-297)


Mounting Feet


Rubber AV's


Flexible Connector & Clips


0-10v Potentiometer


Silencer B1D/B2D Standard & Melinex


Matching Flange


Damper


Acoustic Jacket

MAXFAN COMPAC PRODUCT PERFORMANCE & ELECTRICAL DATA

220-240V/50HZ/1ϕ L TYPE
PERFORMANCE CHART

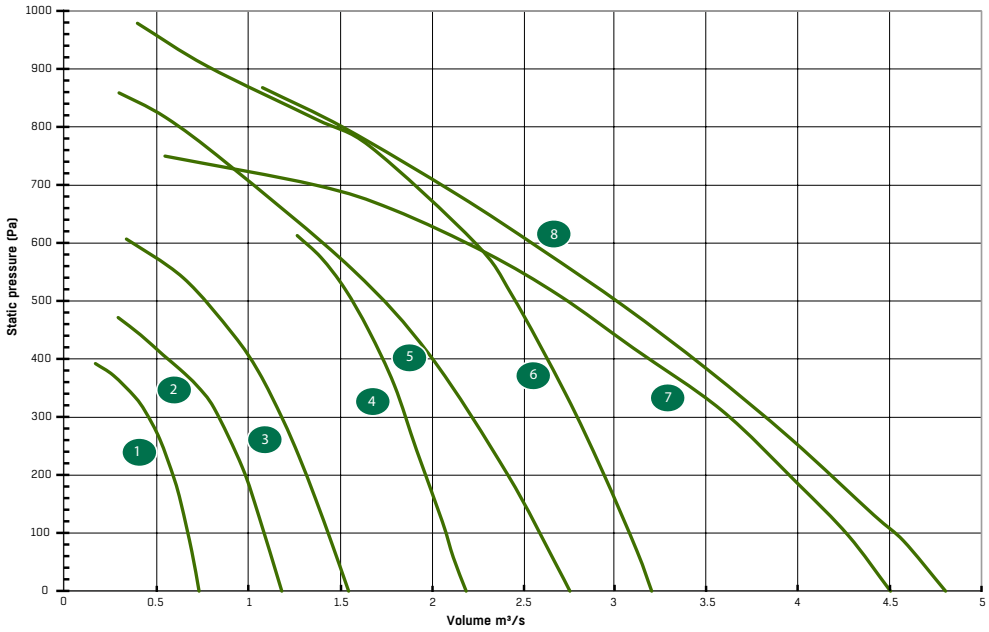

PERFORMANCE TABLE

Ref	Part Number	Fan Description	m³/s @ Pa (Static)										
			0	50	100	200	300	400	500	600	700	800	900
1	**EJ313266**	**31 MaXfan Compac**	**0.74**	**0.71**	**0.68**	**0.59**	**0.46**						
2	**EJ353266**	**35 MaXfan Compac**	**1.19**	**1.14**	**1.09**	**0.99**	**0.85**	**0.57**					
3	**EJ413456**	**40 MaXfan Compac**	**1.55**	**1.49**	**1.44**	**1.31**	**1.18**	**1.02**	**0.78**	**0.41**			
4	**EJ463266**	**45 MaXfan Compac**	**2.19**	**2.14**	**2.07**	**1.98**	**1.87**	**1.74**	**1.58**	**1.33**	**0.89**	**0.6**	**0.35**
5	**EJ513255**	**50 SC MaXfan Compac**	**2.77**	**2.67**	**2.59**	**2.42**	**2.23**	**1.99**	**1.72**	**1.4**	**1.04**	**0.61**	
6	**EJ513266**	**50 MaXfan Compac**	**3.21**	**3.15**	**3.09**	**2.97**	**2.78**	**2.64**	**2.47**	**2.25**	**2.00**	**1.48**	**0.81**
7	**EJ563236**	**56 MaXfan Compac**	**4.54**	**4.4**	**4.22**	**3.96**	**3.62**	**3.24**	**2.78**	**2.25**	**1.33**		
8	**EJ623236**	**63 MaXfan Compac**	**4.87**	**4.66**	**4.52**	**4.19**	**3.81**	**3.44**	**3.00**	**2.51**	**2.1**	**1.53**	**0.79**

PRODUCT AND ELECTRICAL TABLE

Ref	Part Number	Fan Description	Temperature (°C)	Frame	kW	Max Input Amps	FLC (A)	SC (A)	Phase	Voltage	Inverter Model	Wiring Diagram	Breakout Sound Level dB(A) @ 3m	Fan Weight (kg)	Casing Length (mm)
1	**EJ313266**	**31 MaXfan Compac**	**80**	**80**	**0.9**	**11.6**	**3.3**	**18.7**	**1**	**230**	**4.2**	**CD3042**	**45**	**33**	**375**
2	**EJ353266**	**35 MaXfan Compac**	**80**	**80**	**0.9**	**11.6**	**3.3**	**18.7**	**1**	**230**	**4.2**	**CD3042**	**45**	**33**	**375**
3	**EJ413456**	**40 MaXfan Compac**	**80**	**80**	**1.32**	**18.7**	**5.1**	**25.5**	**1**	**230**	**6.8**	**CD3042**	**40**	**35**	**375**
4	**EJ463266**	**45 MaXfan Compac**	**55**	**80**	**1.32**	**18.7**	**5.1**	**25.5**	**1**	**230**	**6.8**	**CD3042**	**43**	**37**	**375**
5	**EJ513255**	**50 SC MaXfan Compac**	**65**	**80**	**1.73**	**18.7**	**6.3**	**35.5**	**1**	**230**	**6.8**	**CD3042**	**49**	**32**	**375**
6	**EJ513266**	**50 MaXfan Compac**	**65**	**90**	**2.64**	**26.4**	**9.4**	**52.8**	**1**	**230**	**9.6**	**CD3042**	**48**	**51**	**520**
7	**EJ563236**	**56 MaXfan Compac**	**70**	**90**	**2.64**	**26.4**	**9.4**	**52.8**	**1**	**230**	**9.6**	**CD3042**	**48**	**55**	**520**
8	**EJ623236**	**63 MaXfan Compac**	**55**	**90**	**2.64**	**26.4**	**9.4**	**52.8**	**1**	**230**	**9.6**	**CD3042**	**50**	**61**	**520**

For ErP efficiency ratings and grades please refer to our Fan Selector for more information. For speed controllers please see pages 250-297.

Sound pressure levels quoted are at the inlet, and are average dBA at 3m distance over a sphere at the mid point at the highest angle given, under free field conditions. These are presented for comparative purposes only.

Products in **bold** are available from our UK Distributors on next day delivery, if ordered by 4pm. Please call to confirm availability on 01206 222 580.

SOUND DATA - MAXFAN COMPAC

Fan Description	Ps Sound data at	Pa Static		Sound Spectrum (Hz)								Overall	
				63	125	250	500	1k	2k	4k	8k	Lw*	LpA @ 3m**
31 MaXfan Compac	0.53 m3/s	252	Inlet*	81	79	80	82	80	76	71	66	88	63
31 MaXfan Compac	0.53 m3/s	252	Outlet*	83	80	81	82	80	77	72	67	89	64
31 MaXfan Compac	0.53 m3/s	252	Breakout*	73	68	64	66	61	53	51	47	75	45
35 MaXfan Compac	0.84 m3/s	302	Inlet*	82	80	84	83	80	77	73	69	89	65
35 MaXfan Compac	0.84 m3/s	302	Outlet*	83	80	85	84	81	78	74	69	90	65
35 MaXfan Compac	0.84 m3/s	302	Breakout*	74	68	68	67	60	54	53	51	76	47
40 MaXfan Compac	1.32 m3/s	200	Inlet*	75	76	82	79	78	77	74	70	86	63
40 MaXfan Compac	1.32 m3/s	200	Outlet*	77	77	85	80	79	77	75	71	88	64
40 MaXfan Compac	1.32 m3/s	200	Breakout*	67	62	65	59	53	48	50	48	70	40
45 MaXfan Compac	1.86 m3/s	300	Inlet*	78	81	88	82	80	80	78	75	91	66
45 MaXfan Compac	1.86 m3/s	300	Outlet*	79	81	88	82	81	80	79	77	91	67
45 MaXfan Compac	1.86 m3/s	300	Breakout*	69	63	66	59	56	52	57	53	72	43
50 SC MaXfan Compac	2 m3/s	400	Inlet*	81	82	89	85	87	87	83	79	95	72
50 SC MaXfan Compac	2 m3/s	400	Outlet*	81	82	91	86	87	87	85	81	96	73
50 SC MaXfan Compac	2 m3/s	400	Breakout*	71	64	69	63	62	59	63	57	75	49
50 MaXfan Compac	2.63 m3/s	400	Inlet*	83	79	87	88	86	85	81	78	94	71
50 MaXfan Compac	2.63 m3/s	400	Outlet*	85	79	90	89	86	86	81	79	95	72
50 MaXfan Compac	2.63 m3/s	400	Breakout*	75	61	68	66	61	58	59	55	77	48
56 MaXfan Compac	3.22 m3/s	400	Inlet*	86	93	88	90	88	85	79	77	97	72
56 MaXfan Compac	3.22 m3/s	400	Outlet*	87	95	89	90	88	85	80	79	98	72
56 MaXfan Compac	3.22 m3/s	400	Breakout*	77	74	63	65	63	58	61	55	79	48
63 MaXfan Compac	3.4 m3/s	400	Inlet*	85	95	93	91	87	84	83	81	99	72
63 MaXfan Compac	3.4 m3/s	400	Outlet*	86	98	94	91	87	85	84	83	100	73
63 MaXfan Compac	3.4 m3/s	400	Breakout*	76	77	68	66	62	58	65	59	80	50

*Lw dB re 10^{-12} W

**dBA re $2x10^{-5}$ Pa

DRAWING - MAXFAN COMPAC

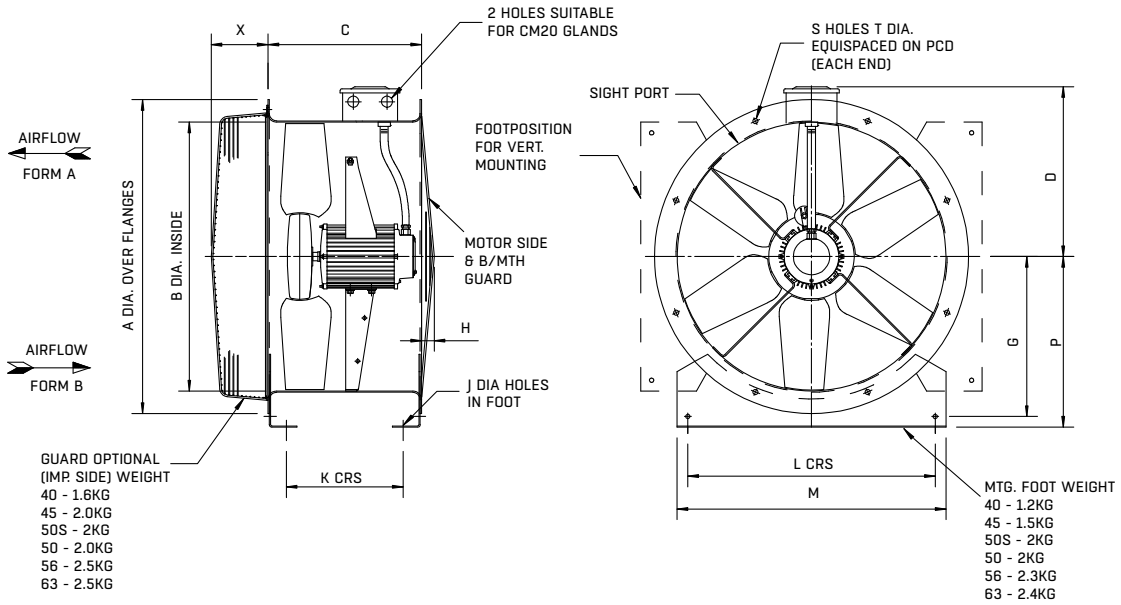

Product Code	Motor Frame	A	B	C	D	G	H	J	K	L	M	P	S	T	x	Weight (kg)
31 MaXfan Compac	80	395	315	375	229	200	30	10	285	265	315	200	8	10	137	33
35 MaXfan Compac	80	435	355	375	249	225	30	10	285	305	355	225	8	10	137	33
40 MaXfan Compac	80	480	400	375	279	225	30	10	290	350	400	250	8	12	137	35
45 MaXfan Compac	80	530	450	375	306	255	30	10	290	400	450	280	8	12	137	37
50 SC MaXfan Compac	80	594	500	375	338	290	30	10	290	450	500	315	12	12	137	32
50 MaXfan Compac	90	594	500	520	338	290	30	10	290	450	500	315	12	12	137	51
56 MaXfan Compac	90L	654	560	520	368	330	50	10	434	510	560	355	12	12	137	55
63 MaXfan Compac	90S	724	630	520	403	375	50	10	434	580	630	400	12	12	137	61

WIRING DIAGRAMS - MAXFAN COMPAC

CD3042 - MAXFAN COMPAC

Mode - On hand (Speed controlled via the up and down arrows on key pad)

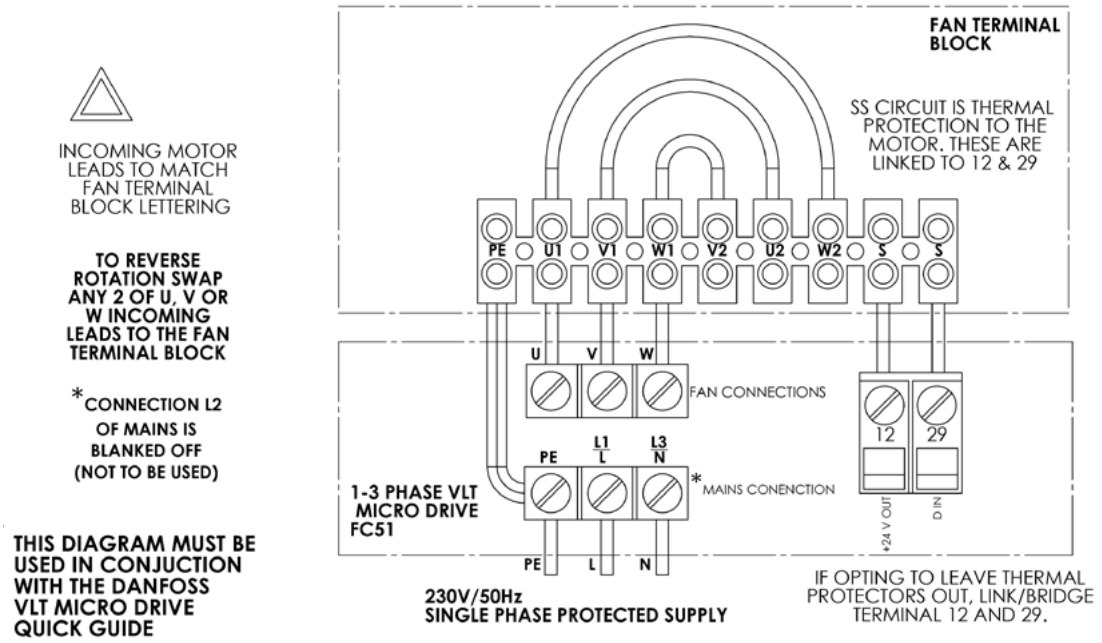

CD3043 - MAXFAN COMPAC INCLUDING POTENTIOMETER

Mode - Auto (Speed controlled via 0-10 volt potentionmeter)

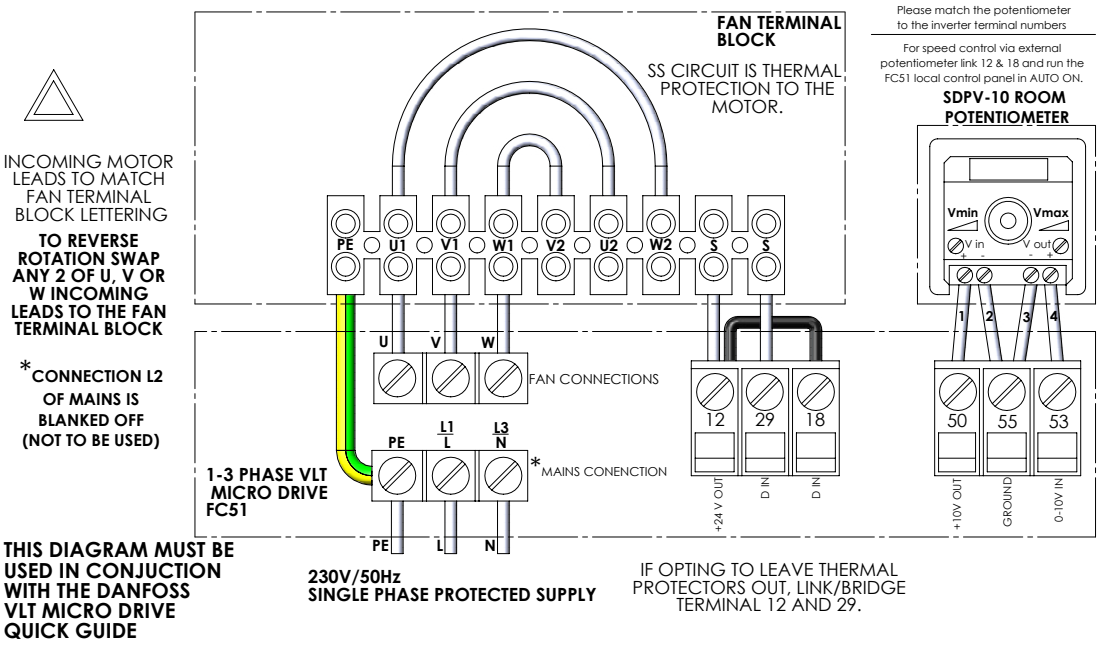

The MaXfan Compac can also be fitted using a remote switch conntected between 12 & 18

INVERTER SINGLE TO THREE PHASE

FEATURES & BENEFITS

- 1 Ph 200-240VAC to 3 Ph 200-240 VAC electrical supply
- Pre-Programmed for easy installation
- Max shielded cable length 25m
- Asynch motor speed control
- Ultra compact & light making it easy to install
- Simple to use Alpha-numeric display
- Included fitted potentiometer for manual speed adjustment
- Connectable as Modbus RTU offering control flexibility
- Built in RFI filter minimising interference
- Built-in brake functions with built in DC and AC brake functions
- 2xAI, 1xAO & 1xRO / RS485 connection options
- BMS enable/disable
- Maximum operating ambient 50ºC
- Coated PCB standard for harsh environments
- High energy efficiency

DESCRIPTION

Our inverter is a frequency converter with unsurpassed reliability, user-friendliness, condensed functionality, and extremely easy to commission. Terminal numbers are named in the same manner as in the rest of the family, making installation easy.

It converts a single phase 200-240 VAC input into a three phase output to allow the MaXfan Compac product to use a high efficiency 3Ph, 230V motor.

A safety isolator/switch disconnector should be installed on the mains side of the drive to ensure that the mains supply can be isolated for maintenance.

Please see the image below, illustrating the connections on the bottom of the inverter drive.

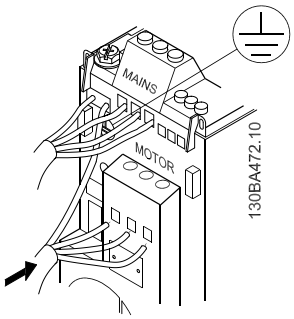

RANGE

There are three matched inverters that are specifically designed to use with our MaXfan Compac fan range. Details are shown below.

Part Number	Inverter Model	Ph.	V	Amps	kW	Enc.
PK901092	4.2	1-3	200-240V	4.2	0.75	M1
PK901090	6.8	1-3	200-240V	6.8	1.5	M2
PK901091	9.6	1-3	200-240V	9.6	2.2	M3

Step 1
Fit top cover on frequency converter.

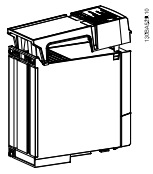

Illustration 4.14

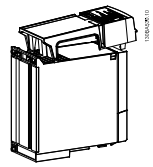

Illustration 4.15

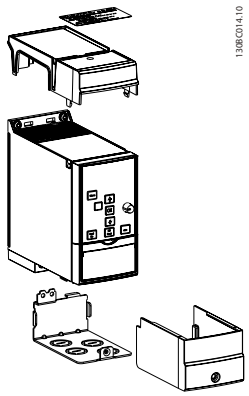

Illustration 4.16

INVERTER - QUICK INSTALLATION GUIDE

Ready – Steady – Go!

Connect motor and power cables, turn the control knob, and watch the motor speed change.

RoHS compliant
The VLT® Micro Drive does not contain lead, cadmium, hexavalent chrome, mercury, *or flame retardant PBB and PBDE.*

INVERTER - TECHNICAL & DRAWING DETAILS

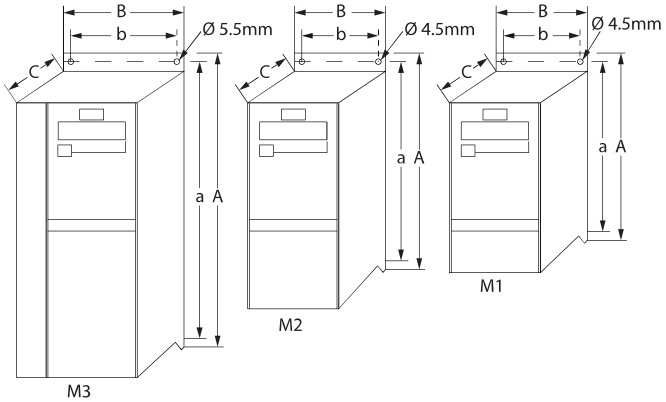

Part Number	Inverter Model	Enc.	Ph.	V	Amps	kW	Power [kW] 1x200-240 V	Height [mm] A (incl. conversion kit)	Width [mm] B	Width [mm] b	Depth [mm] C	Max. Weight kg
PK901092	**4.2**	**M1**	**1-3**	**200-240V**	**4.2**	**0.75**	**0.75**	**219.3**	**70**	**55**	**148**	**1.1**
PK901090	**6.8**	**M2**	**1-3**	**200-240V**	**6.8**	**1.5**	**1.5**	**245.6**	**78**	**59**	**144**	**1.6**
PK901091	**9.6**	**M3**	**1-3**	**200-240V**	**9.6**	**2.2**	**2.2**	**297.5**	**95**	**69**	**210**	**3**

FläktGroup

DENCO HAPPEL SEMCO FLÄKT WOODS DELBAG ILOXAIR

JMv AXIAL FLOW FAN

- TAKES AERODYNAMIC EFFICIENCY BEYOND THE NEXT LEVEL

- 11 sizes: 315mm to 1000mm
- Airflow: up to 27.8 m^3/s
- Pressure: up to 1638 Pa
- 1 ph / 220V 50hz • 3 ph / 400V 50hz
- Standard and High Temperature version (up to 400°C/2 hours)

Our JMv fan range extension not only offers more sizes (up to 1000mm), but as you would expect, it delivers outstanding performance.
Thanks to our Vortex Creation Control technology, new innovative impeller design and aerodynamic impeller spinner, which all work in harmony with our unique 2 stage guide vane system – we can reduce electricity bills by up to 27% per year!

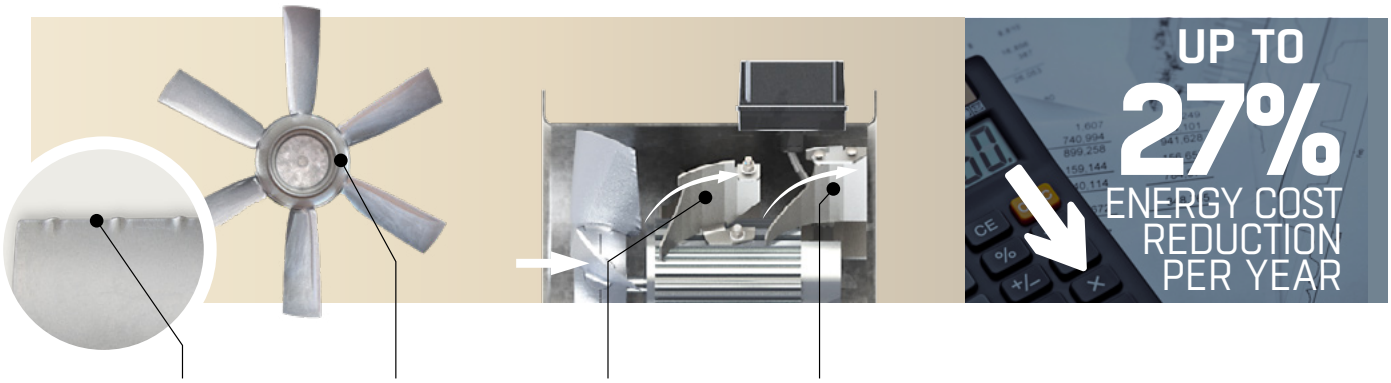

High efficiency **VCC** impeller blade technology

Improved impeller design with integral aerodynamic spinner (fitted to larger fan sizes)

Integral Guide Vanes support the drive motor

Secondary Guide Vanes boost efficiency further

PLATE FANS
JM PLATE FAN

PRODUCT FACTS

- Air flow up to 8.17 m^3/s
- Static pressures up to 260 Pa
- Motor protection IP55
- Speed controllable
- Supplied fully assembled
- Full range of accessories
- Speed controllable

ELECTRICAL SUPPLY

220-240V/50Hz/1ϕ & 380-420V/50Hz/3ϕ

TEMPERATURE RANGE

-40°C to 50°C as standard. Suitable for 70°C at full speed.

SIZES

315, 355, 400, 450, 500, 560, 630, 710 & 1000 mm

PLATE

Plates manufactured from mild steel with powder coat finish, fans are supplied as standard with motor side guard.

MOTORS

All motors are totally enclosed airstream rated class F insulation. Constructed from aluminium or cast iron as standard with special 'T' slot, or pad mounted fixings Suitable for horizontal through to vertical shaft operation. Supplied IP55 with removable drain plugs. These motors are suitable for inverter speed control down to 20% of full speed.

IMPELLERS

A unique high efficiency aerofoil section blade. Woods impellers are all high pressure die cast to offer thin aerofoil sections for low generation of noise. Every cast aluminium component is X-ray examined using Real Time Radiography inspection prior to assembly. The maximum pitch angles shown allow for speed control by frequency inverter.

PRODUCT CODE

63JMP/20/4/3/32

- 63 - denotes the Fan impeller diameter in centimetres
- JMP - denotes Plate Fan type
- 20 - denotes impeller hub diameter in centimetres
- 4 - denotes a nominal 4 Pole speed
- 3 - denotes the number of blades
- 32 - denotes the Pitch Angle for the required duty

ACCESSORIES (Pages 230-237) CONTROLLERS (Pages 249-297)

Louvre Shutters

Imepller side Guard

Controls Transformer

Controls Inverter

Controls Electronic

JMP PERFORMANCE AND ELECTRICAL DATA

220-240V/50HZ/1ϕ

PERFORMANCE CHART

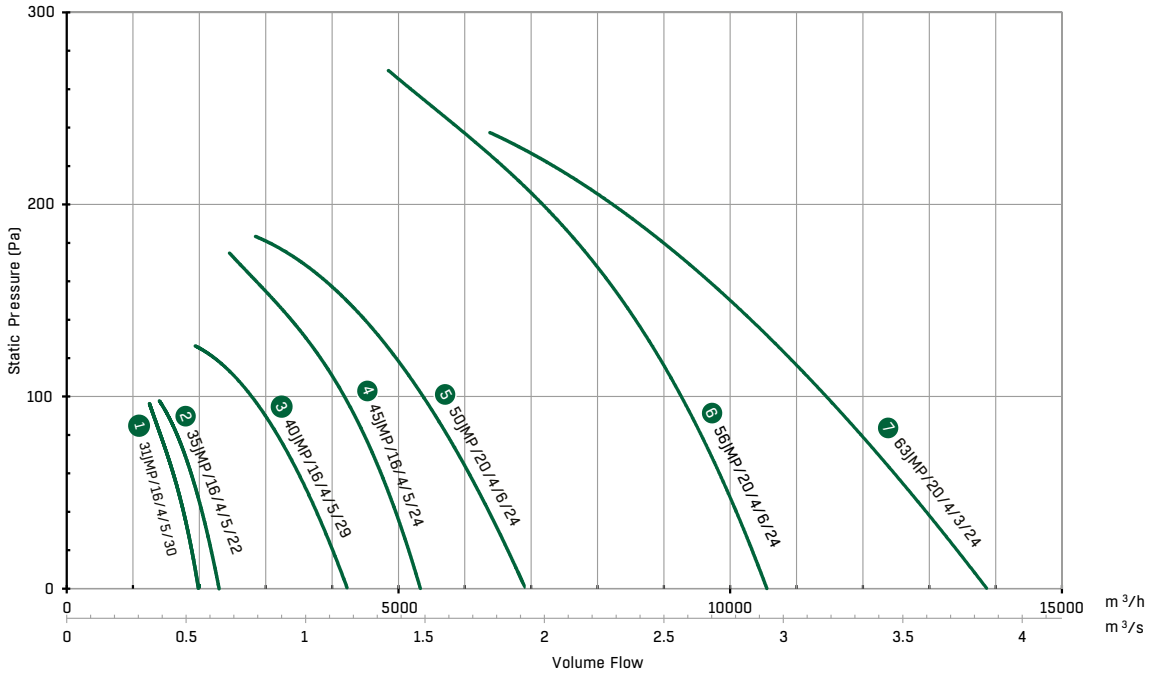

PERFORMANCE TABLE

Ref	Product Code	m³/s at Pa (Static)					
		0	50	100	150	200	250
1	31JMP/16/4/5/30	0.54	0.46				
2	35JMP/16/4/5/22	0.63	0.54				
3	40JMP/16/4/5/29	1.27	1.15	0.99	0.77		
4	45JMP/16/4/5/24	1.48	1.34	1.16	0.87		
5	50JMP/20/4/6/24	1.91	1.76	1.59	1.36	1.03	
6	56JMP/20/4/6/24	2.93	2.77	2.57	2.33	2	1.55
7	63JMP/20/4/3/24	3.86	3.54	3.19	2.79	2.3	

PRODUCT AND ELECTRICAL DETAILS

Ref	Product Code	Product Number	Pitch Angle (°)	Speed rev/min	Motor	Rating (kW)	Full Load Current (A)	Starting Current (A)	Wiring Diagram (CD)	Speed Controller		Inlet Sound Levels	Efficiency Rating	Target	Grade
										Electronic	Transformer				
1	31JMP/16/4/5/30	EP315412	30	1430	BT5	0.075	0.54	1.45	CD3038	ME1.1	TEID 1	42	ErP Exempt		
2	35JMP/16/4/5/22	EP355412	22	1430	BT5	0.075	0.54	1.45	CD3038	ME1.1	TEID 1	43	ErP Exempt		
3	40JMP/16/4/5/29	EP405415	29	1420	BT5	0.16	1.12	2.15	CD3038	ME1.3	TEID 1.5	49	30.4	27.0	40
4	45JMP/16/4/5/24	EP455410	24	1360	BT9	0.32	2.2	5.0	CD3038	ME1.3	TEID 2.2	49	35.3	31.0	44
5	50JMP/20/4/6/24	EP505415	24	1360	CT9	0.39	2.9	5.4	CD3038	ME1.3	TEID 3.5	53	29.4	28.7	40
6	56JMP/20/4/6/24	EP565411	24	1400	CT9	0.97	6.9	13.5	CD3037	ME1.6	TEID 7.5	55	39.7	33.7	46
7	63JMP/20/4/3/24	EP635411	24	1400	CT9	0.97	6.9	13.5	CD3037	ME1.6	TEID 7.5	57	43.5	33.8	49

For ErP efficiency ratings and grades please refer to our Fan Selector for more information. Sound pressure levels quoted are at the inlet, and are average dBA at 3m distance over a sphere at the mid point at the highest angle given, under free field conditions. These are presented for comparative purposes only. For speed controllers please see pages 250-297.

JMP PERFORMANCE AND ELECTRICAL DATA

380-420V/50HZ/3ϕ

PERFORMANCE CHART

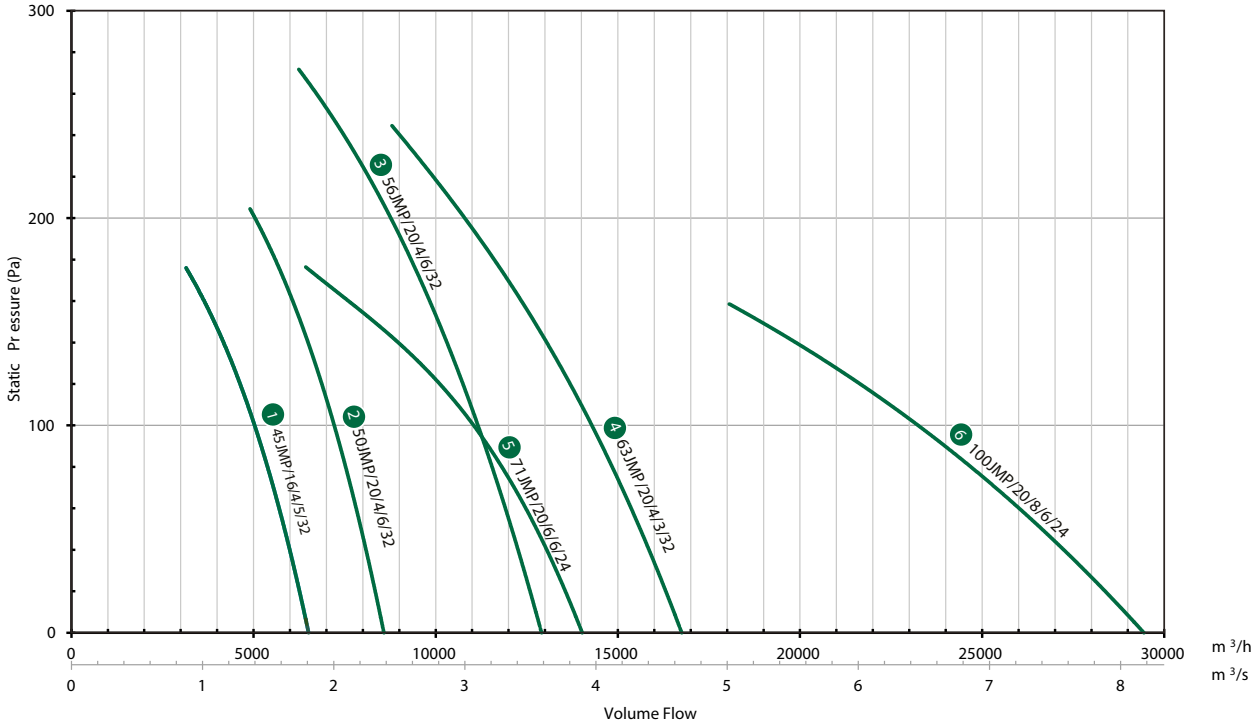

PERFORMANCE TABLE

Ref	Product Code	m³/s at Pa (Static) 0	50	100	150	200	250
1	**45JMP/16/4/5/32**	**1.8**	**1.62**	**1.39**	**1.08**		
2	**50JMP/20/4/6/32**	**2.38**	**2.2**	**2**	**1.74**	**1.4**	
3	**56JMP/20/4/6/32**	**3.58**	**3.35**	**3.09**	**2.79**	**2.43**	**1.97**
4	**63JMP/20/4/3/32**	**4.65**	**4.33**	**3.96**	**3.53**	**2.99**	
5	71JMP/20/6/6/24	3.89	3.54	3.06	2.3		
6	100JMP/25/8/6/24	8.17	7.4	6.45	5.25		

PRODUCT AND ELECTRICAL DETAILS

Ref	Product Code	Product Number	Pitch Angle (°)	Speed rev/min	Motor	Rating (kW)	Full Load Current (A)	Starting Current (A)	Wiring Diagram (CD)	Speed Controller Electronic	Transformer	Inverter	Inlet Sound Levels	Efficiency Rating	Target	Grade
1	**45JMP/16/4/5/32**	**EP455430**	**32**	**1360**	**BT9**	**0.39**	**1.26**	**3.9**	**CD2417**	**N/A**	**TDID 2.5A**	**IDDXF54-2.2**	**52**	**31.9**	**31.8**	**40**
2	**50JMP/20/4/6/32**	**EP505430**	**32**	**1360**	**CT9**	**0.83**	**2.3**	**8.6**	**CD2417**	**N/A**	**TDID 2.5A**	**IDDXF54-3.7**	**56**	**34.6**	**33.1**	**41**
3	**56JMP/20/4/6/32**	**EP565430**	**32**	**1400**	**90S (IE2)**	**1.32**	**2.84**	**15.6**	**CD2416**	**N/A**	**N/A**	**IDDXF54-3.7**	**60**	**39.7**	**34.3**	**45**
4	**63JMP/20/4/3/32**	**EP635430**	**32**	**1400**	**90S (IE2)**	**1.32**	**2.84**	**15.6**	**CD2416**	**N/A**	**N/A**	**IDDXF54-3.7**	**59**	**41.4**	**34.7**	**46**
5	71JMP/20/6/6/24	EP715630	24	900	80 (IE2)	0.66	1.64	6.07	**CD2416**	N/A	N/A	IDDXF54-2.2	53	39.8	33.3	46
6	100JMP/25/8/6/24	EP135630	24	695	112M (IE2)	1.80	4.51	19.39	**CD2417**	N/A	N/A	IDDXF54-5.3	61	40.8	35.5	45

For ErP efficiency ratings and grades please refer to our Fan Selector for more information. Sound pressure levels quoted are at the inlet, and are average dBA at 3m distance over a sphere at the mid point at the highest angle given, under free field conditions. These are presented for comparative purposes only. For speed controllers please see pages 250-297.

Products in **bold** are available from our UK Distributors on next day delivery, if ordered by 4pm. Please call to confirm availability on 01206 222 580.

DRAWING - JM PLATE

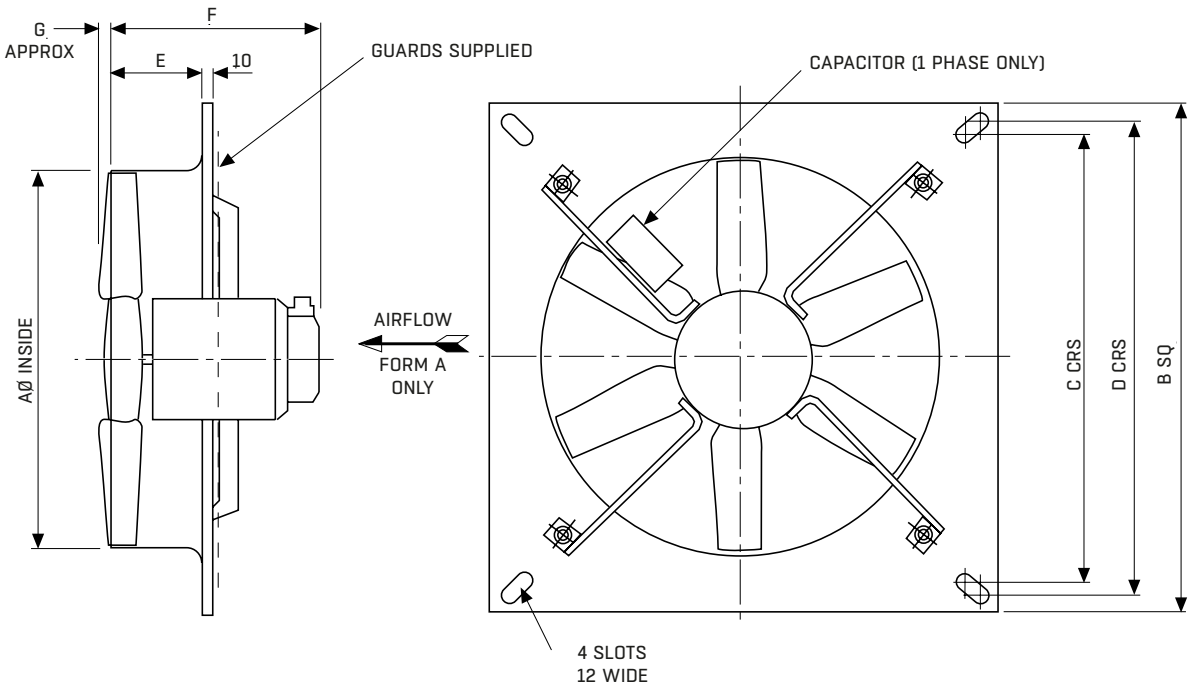

Aluminium frames, plastic shutters. Shutters must be separated from the fan mounting plane by the following minimum distances:
Up to 500 mm Ø – 150 mm
560 to 710 mm Ø – 200 mm
800, 1000 mm Ø – 275 mm

Note; that under some combinations of fan speed and wind the shutters vanes may become unstable. This is more likely to occur at reduced fan speed.

Code	Motor Range	A	B	C	D	E	F	G	Weight (kg)
31JMP/16/4/5/40	1420	315	425	375	400	100	263	18	10
35JMP/16/4/5/34	1440	355	475	425	450	100	256	20	11
40JMP/16/4/5/40	1440	400	520	470	495	100	295	22	14
45JMP/16/4/5/40	1440	450	585	535	560	100	268	24	17
50JMP/16/4/5/30	1440	500	650	600	625	110	259	26	18
56JMP/16/4/5/30	1440	560	715	665	690	110	299	28	23
63JMP/16/4/3/24	1420	630	780	735	755	110	306	23	26
71JMP/20/6/6/24	900	710	875	830	850	110	270	23	32
100JMP/25/8/6/24	695	1000	1170	1110	-	107	395	-	101

All dimensions in mm.

WIRING DIAGRAMS - JM PLATE

CD2416

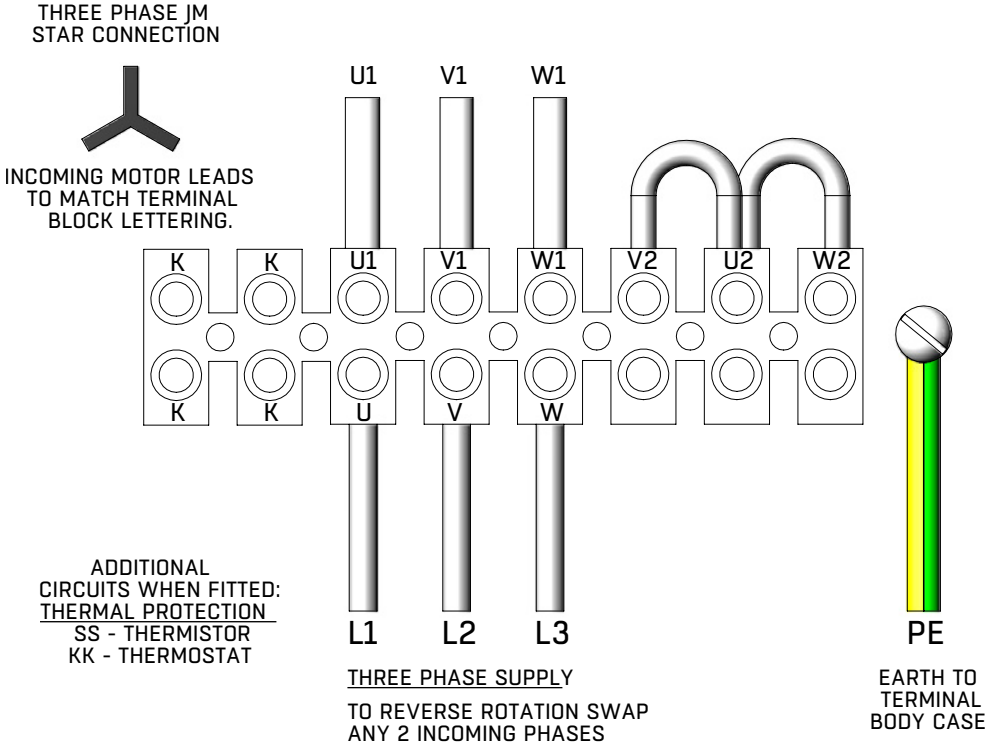

CD2417

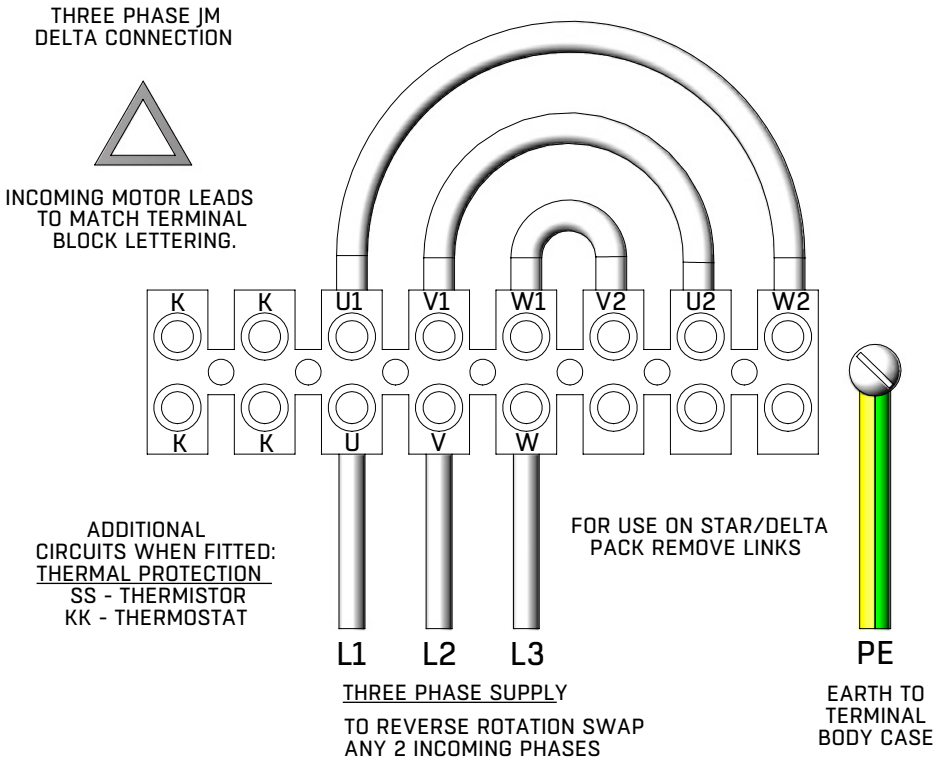

WIRING DIAGRAMS - JM PLATE

CD3038 - 315-500 JMP 1 PHASE (WITHOUT AND WITH ME SPEED CONTROLLER)

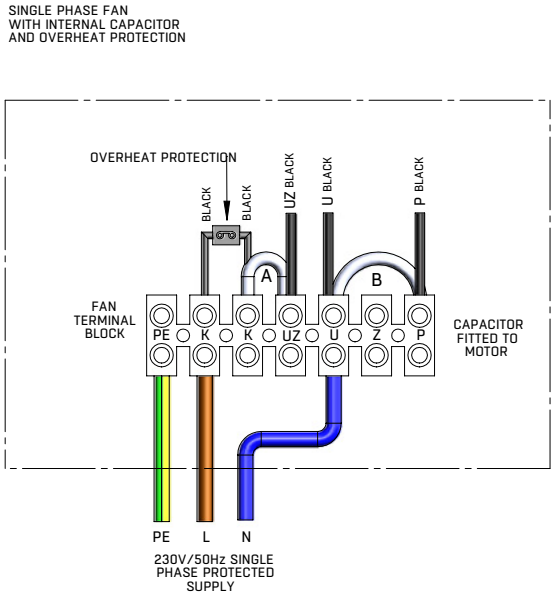

FAN CONNECTED TO SUPPLY (FULL SPEED)

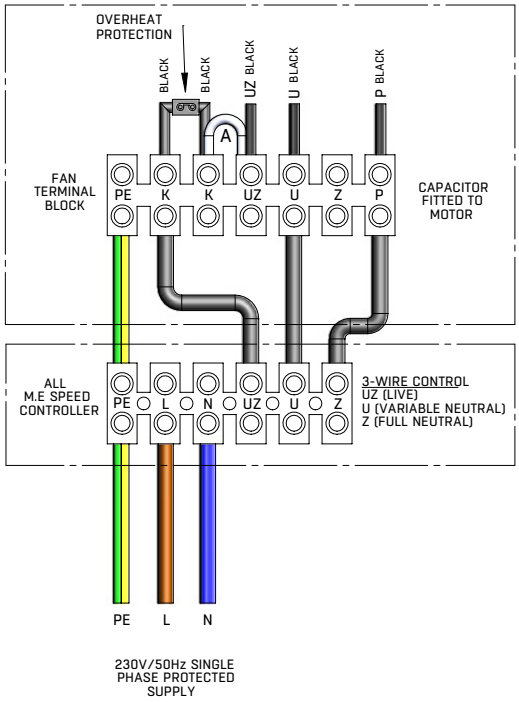

FAN CONNECTED TO SPEED CONTROLLER (VARIABLE SPEED)

CD3037 - 560-630 JMP 1 PHASE (WITHOUT AND WITH ME SPEED CONTROLLER)

For JMP single phase transformer speed controller wiring diagrams please refer to page 47

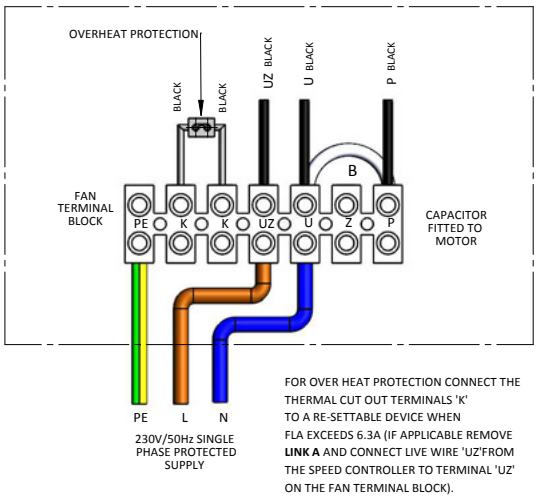

FAN CONNECTED TO SUPPLY (FULL SPEED)

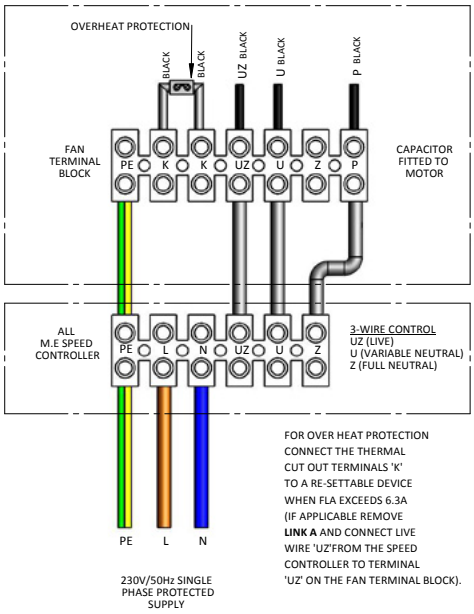

FAN CONNECTED TO SPEED CONTROLLER (VARIABLE SPEED)

CASED AXIAL
JM AEROFOIL BIFURCATED

PRODUCT FACTS

- Air flow up to 17.3 m^3/s
- Static pressures up to 995 Pa
- Motor protection and terminal block IP55
- Fans tested to ISO5801 and BS848
- Overheat protection available
- Motor is external to air stream
- DW172 compliant for solid fuel cooking applications

ELECTRICAL SUPPLY

380-420V/50Hz/3ϕ

1 phase is available via inverter drive - dependent on fan size

TEMPERATURE RANGE

Suitable for temperatures between 100°C and 200°C (continuous operation) - exempt from ErP legislation.

SIZES

400, 500, 560, 630, 800 & 1000 mm

IMPELLERS

A unique high efficiency aerofoil section blade with a smoothed hub and clamp plate for adjustable pitch angle availability.

Woods impellers are die cast to offer thin aerofoil sections for low generation of noise. Every component is X-rayed using Real Time Radiography inspection prior to assembly. The maximum pitch angles shown allow for speed control by frequency inverter.

MOTORS

All motors are totally enclosed fan cooled class F insulation with protection to IP55 and are IE1/IE3 compliant. All motors are supplied with sealed for life bearings or extended lubricators. These motors are suitable for inverter speed control down to 20% of full speed.

CASING

Bifurcated fans are available long case only. Long casing covers impeller and motor and has duct mounted terminal box. The hot dipped galvanised casing gives a high resistance to corrosion. Motor is mounted inside a tunnel, so is 'out of air stream'.

Bifurcated fans for external roof mounting, please ensure the motor tunnel in mounted vertically downwards to avoid water ingress.

TEMPERATURE RANGE

If the temperature of airflow within a bifurcated fan system is excessive, Woods recommend that the fan is allowed to overrun so that any heat is removed from the system. Failure to do this could mean that heat will transfer via the shaft/casing to the motor tunnel, which could cause degradation of the grease and lead to premature failure.

PRODUCT CODE

63JMBif/20/4/6/30

- 63 - denotes the fan impeller diameter in centimetres
- JM. Bif - denotes bifurcated variant
- 20 - denotes impeller hub diameter in centimetres
- 4 - denotes a nominal 8 pole speed
- 6 - denotes the number of blades
- 30 - denotes the pitch angle for the required duty

ACCESSORIES (Pages 230-227) - CONTROLLERS (Pages 249-297)


Damper

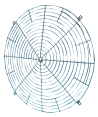
Guard


Bellmouth


Flange


Mounting Feet


Silencer


Spring AV's


Flexible Connector


Controls Inverter


Rubber AV's

JM BIFURCATED PERFORMANCE AND ELECTRICAL DATA

380-420V/50HZ/3ϕ

PERFORMANCE CHART - 400-500 MM

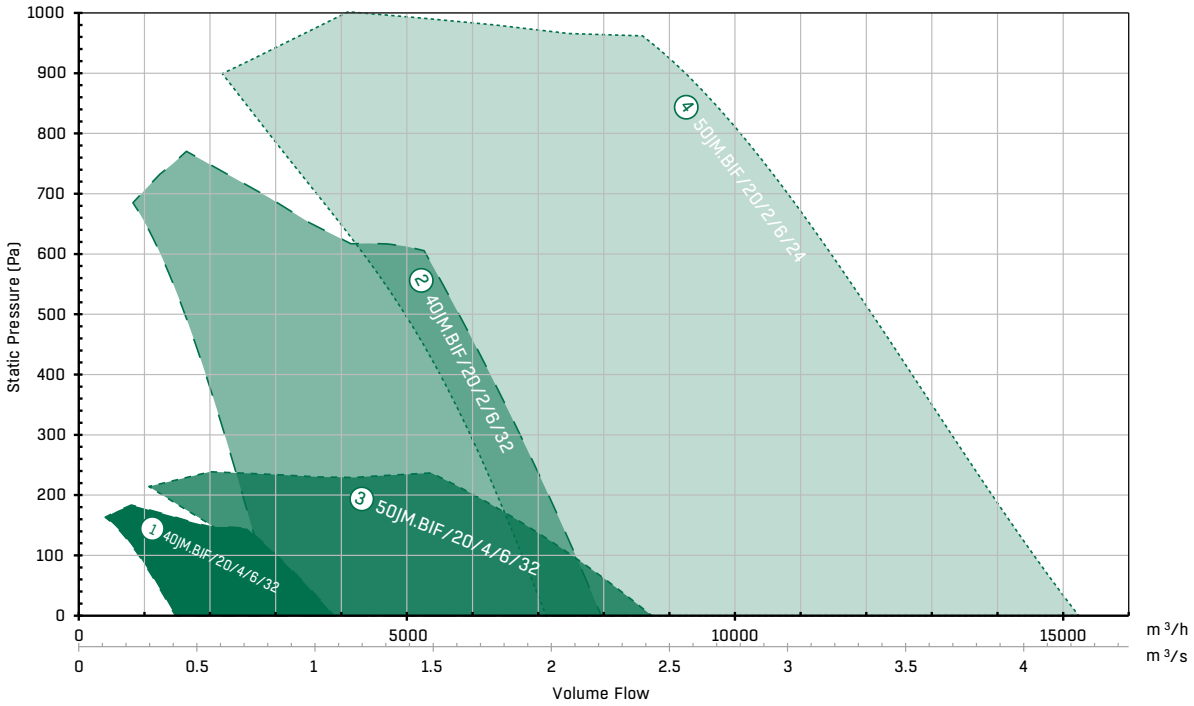

As standard 3 phase JM Aerofoils are supplied at the maximum pitch angle, the envelope curve above illustrates the pitch angle range available on request.

PERFORMANCE TABLE - 400-500 MM

Ref	Product Code	m³/s @ Pa (Static)												
		0	50	100	150	200	250	300	400	500	600	700	800	900
1	**40JM.BIF/20/4/6/32**	**1.07**	**0.96**	**0.83**										
2	**40JM.BIF/20/2/6/32**	**2.21**	**2.15**	**2.1**	**2.04**	**1.98**	**1.92**	**1.86**	**1.74**	**1.6**	**1.46**			
3	**50JM.BIF/20/4/6/32**	**2.42**	**2.26**	**2.08**	**1.89**	**1.67**								
4	**50JM.BIF/20/2/6/24**	**4.23**	**4.13**	**4.04**	**3.95**	**3.86**	**3.78**	**3.69**	**3.52**	**3.35**	**3.18**	**3**	**2.8**	**2.56**

PRODUCT & ELECTRICAL DETAILS - 400-500 MM

Ref	Product Code	Product Number	Pitch Angle (°)		Speed rev/min	Motor	Rating (kW)	Full Load Current (A)	Starting Current (A)	Wiring Diagram (CD)	Inverter 3-3Ph	Inverter 1-3Ph	Inlet Sound Levels
			Min	Max									
1	**40JM.BIF/20/4/6/32**	**JN245011**	**8**	**32**	**1440**	**90S (IE1)**	**0.55**	**1.36**	**8.7**	**CD2416**	**IDDXF54-2.2**	**IEDXB20 4.2**	**58**
3	**40JM.BIF/20/2/6/32**	**JN245009**	**8**	**32**	**2950**	**90L (IE3)**	**2.2**	**4.58**	**30.2**	**CD2416**	**IDDXF54-5.3**	**IEDXB20 9.6**	**75**
2	**50JM.BIF/20/4/6/32**	**JN275012**	**8**	**32**	**1440**	**90S (IE3)**	**0.75**	**1.69**	**9.97**	**CD2416**	**IDDXF54-2.2**	**IEDXB20 4.2**	**62**
4	**50JM.BIF/20/2/6/24**	**JN275011**	**8**	**24**	**2950**	**112M (IE3)**	**4.0**	**7.72**	**50.2**	**CD2417**	**IDDXF54-9**	**-**	**80**

Sound pressure levels quoted are at the inlet, and are average dBA at 3m distance over a sphere at the mid point at the highest angle given, under free field conditions. These are presented for comparative purposes only. For speed controllers please see pages 250-297.

1 phase inverter drives are available on request, please contact our sales office for more information.

Please note the fan must be re-connected in Delta when using the 1-3 phase inverter drive.

Products in **bold** are available from our UK Distributors on next day delivery, if ordered by 4pm. Please call to confirm availability on 01206 222 580.

DRAWING - 40JM.BIF-50JM BIF

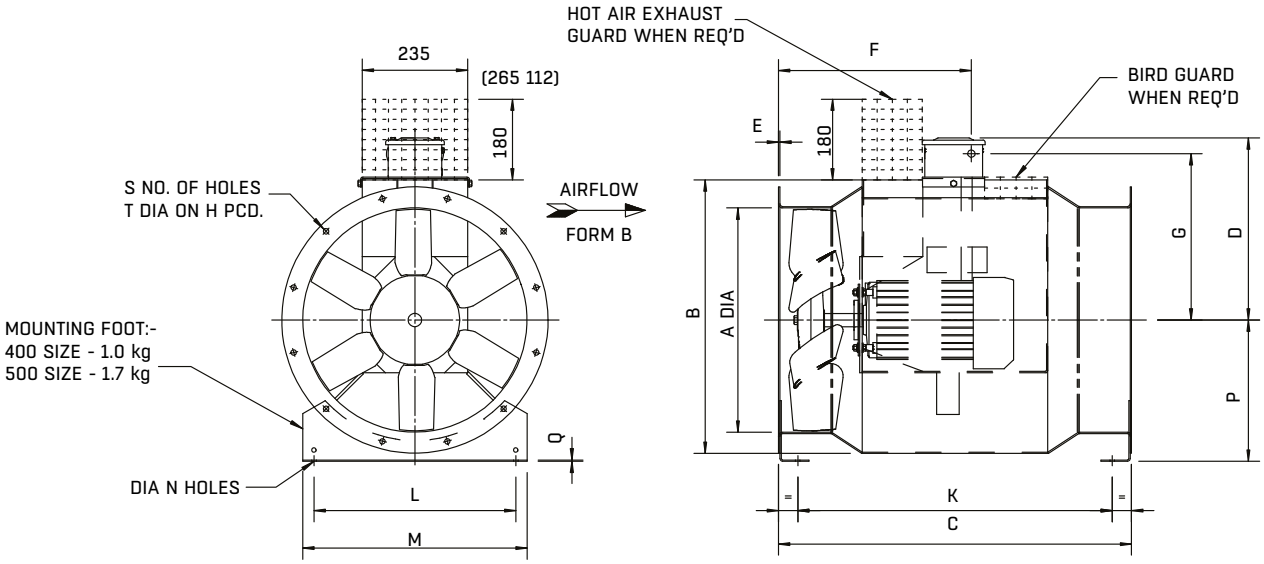

Product Code	Motor Range	A	B	C	D	E	F	G	H	K	L	M	N	P	Q	S	T	Max. Fan Weight (kg)
40JM.Bif/20/4/6/32	90S	400	524	726	334	3	407	356	450	641	350	400	10	250	3	8	12	55
40JM.Bif/20/2/6/32	90L	400	524	726	334	3	407	356	450	641	350	400	10	250	3	8	12	57
50JM.Bif/20/4/6/32	90S	500	610	787	383	3	397	361	560	691	450	500	10	315	3	12	12	62
50JM.Bif/20/2/6/24	112M	500	610	787	383	3	397	361	560	691	450	500	10	315	3	12	12	76

All dimensions in mm.

JM BIFURCATED PERFORMANCE AND ELECTRICAL DATA

380-420V/50HZ/3ϕ

PERFORMANCE CHART - 630-1000 MM

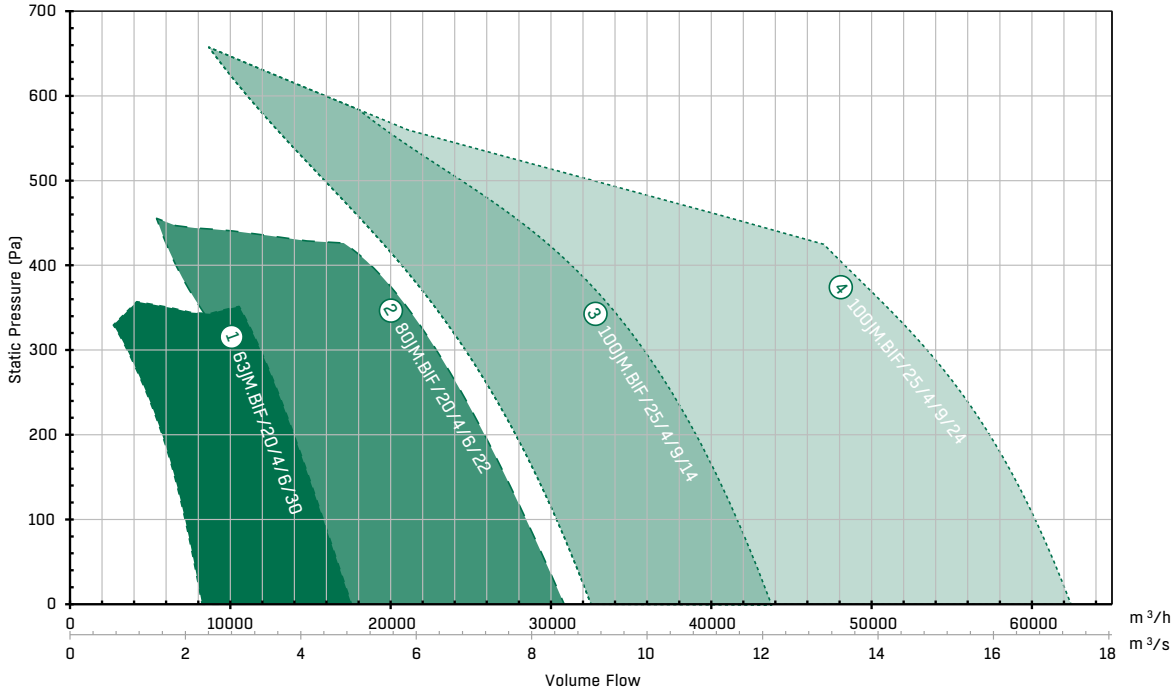

As standard 3 phase JM Aerofoils are supplied at the maximum pitch angle, the envelope curve above illustrates the pitch angle range available on request.

PERFORMANCE TABLE - 630-1000 MM

Ref	Product Code	m³/s @ Pa (Static)								
		0	50	100	150	200	250	300	400	500
1	**63JM.BIF/20/4/6/30**	**4.87**	**4.63**	**4.38**	**4.13**	**3.88**	**3.6**	**3.3**		
2	**80JM.BIF/20/4/6/22**	**8.56**	**8.23**	**7.9**	**7.55**	**7.18**	**6.78**	**6.34**	**5.21**	
3	**100JM.BIF/25/4/9/14**	**12.15**	**11.86**	**11.56**	**11.22**	**10.84**	**10.42**	**9.94**	**8.69**	**6.78**
4	100JM.BIF/25/4/9/24	17.34	17.05	16.72	16.35	15.93	15.43	14.85	13.42	

PRODUCT & ELECTRICAL DETAILS - 630-1000 MM

Ref	Product Code	Product Number	Pitch Angle (°)		Speed rev/min	Motor	Rating (kW)	Full Load Current (A)	Starting Current (A)	Wiring Diagram (CD)	Inverter 3-3Ph	Inverter 1-3Ph	Inlet Sound Levels
			Min	Max									
1	**63JM.BIF/20/4/6/30**	**JN305003**	**10**	**30**	**1440**	**100L (IE3)**	**2.2**	**4.43**	**32.8**	**CD2416**	**IDDXF54-5.3**	**IEDXB20 9.6**	**72**
2	**80JM.BIF/20/4/6/22**	**JN839013**	**8**	**22**	**1440**	**112M (IE3)**	**4.0**	**8.11**	**49.5**	**CD2417**	**IDDXF54-9**	**-**	**72**
3	**100JM.BIF/25/4/9/14**	**JN139425**	**8**	**14**	**1470**	**132 (IE3)**	**7.5**	**14.1**	**101.5**	**CD2417**	**IDDXF54-15.5**	**-**	**84**
4	100JM.BIF/25/4/9/24	JN139430	8	24	1470	160 (IE3)	15	28.7	177.9	CD2417	IDDXF54-31	-	88

Sound pressure levels quoted are at the inlet, and are average dBA at 3m distance over a sphere at the mid point at the highest angle given, under free field conditions. These are presented for comparative purposes only. For speed controllers please see pages 250-297.

1 phase inverter drives are availabe on request, please contact our sales office for more information.

Please note the fan must be re-connected in Delta when using the 1-3 phase inverter drive, use CD2417.

Products in **bold** are available from our UK Distributors on next day delivery, if ordered by 4pm. Please call to confirm availability on 01206 222 580.

DRAWING - 63JM.BIF-100JM BIF

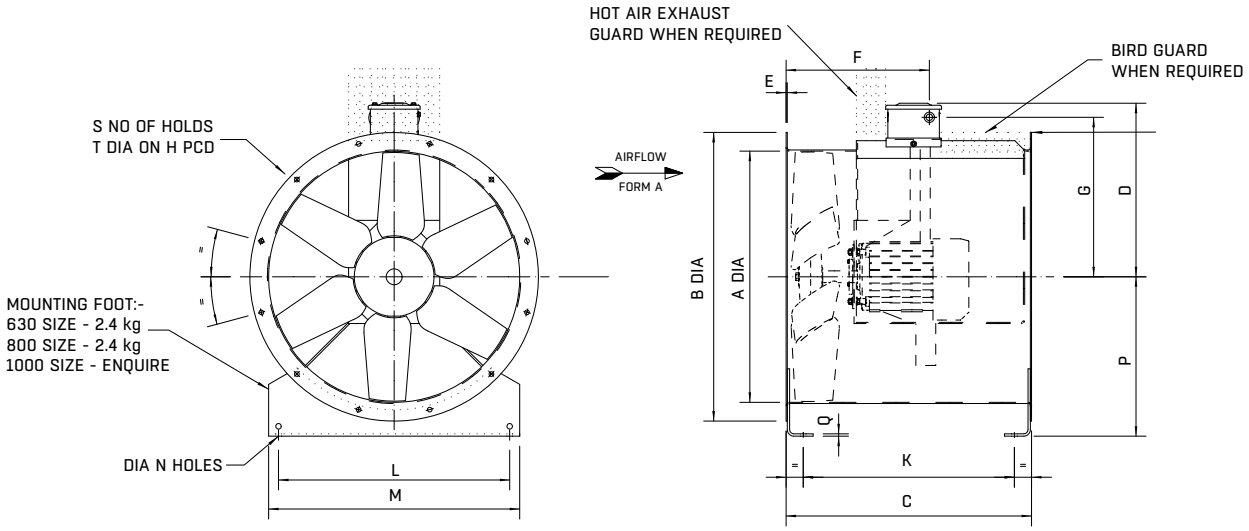

Product Code	Motor Range	A	B	C	D	E	F	G	H	K	L	M	N	P	Q	S	T	Max. Fan Weight (kg)
63JM.Bif/20/4/6/30	100L	630	724	616	412	3	390	434	690	530	580	630	10	400	3	12	12	71
80JM.Bif/20/4/6/22	112M	800	894	660	495	3	434	517	860	544	750	800	10	510	5	16	12	107
100JM.Bif/25/4/9/14	132L	1000	1138	800	650	5	492	608	1070	730	950	1000	12	630	6	16	15	280
100JM.Bif/25/4/9/24	160L	1000	1138	1000	689	5	536	604	1070	930	950	1000	12	630	6	16	15	335

All dimensions in mm.

WIRING DIAGRAMS - JM BIFURCATED AEROFOIL

CD2416

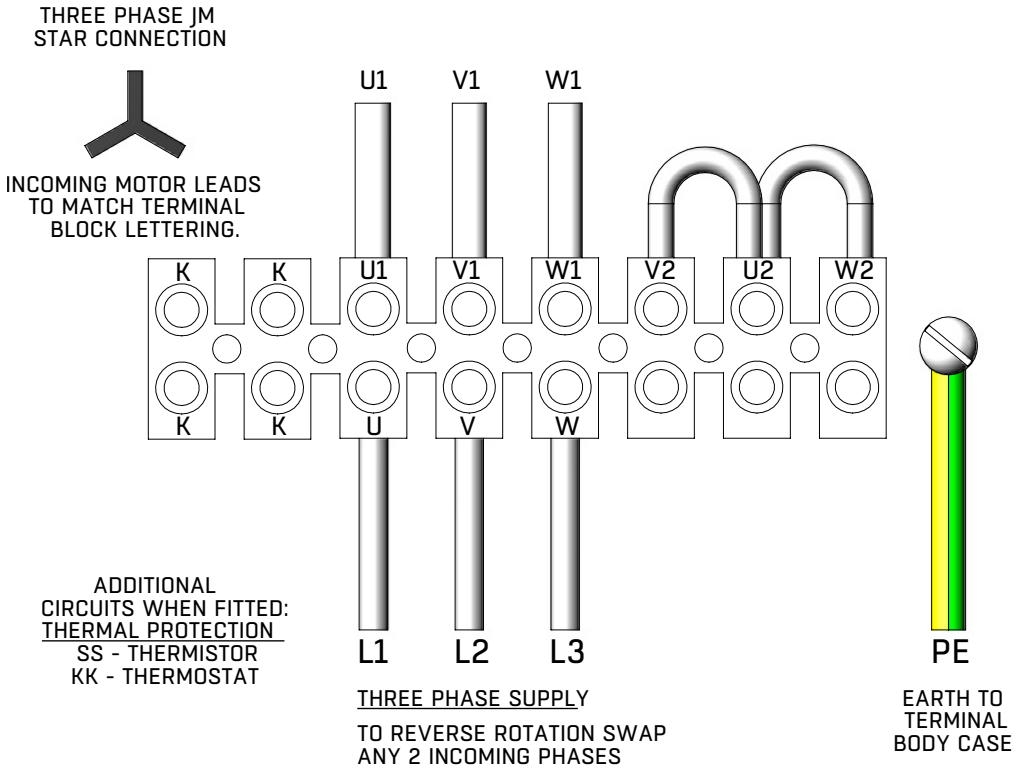

CD2417

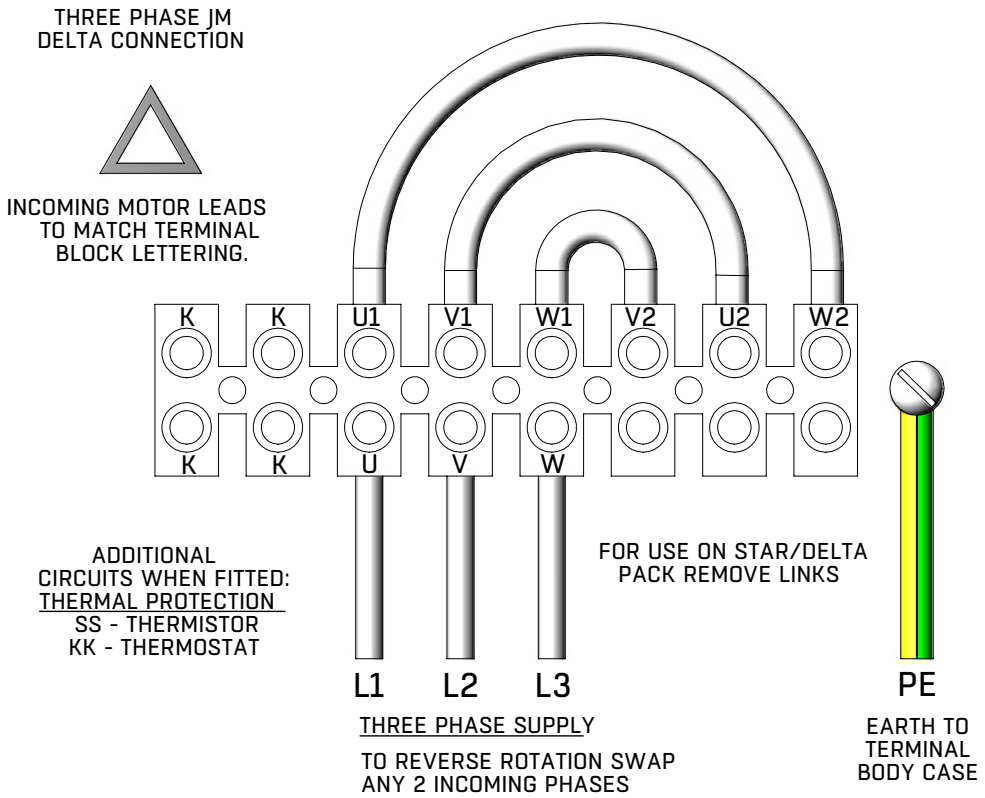

WIRING DIAGRAMS

CD3042 - JM BIFURCATED CONNECTED VIA 1 PHASE INVERTER DRIVE

Mode - On hand (Speed controlled via the up and down arrows on key pad)

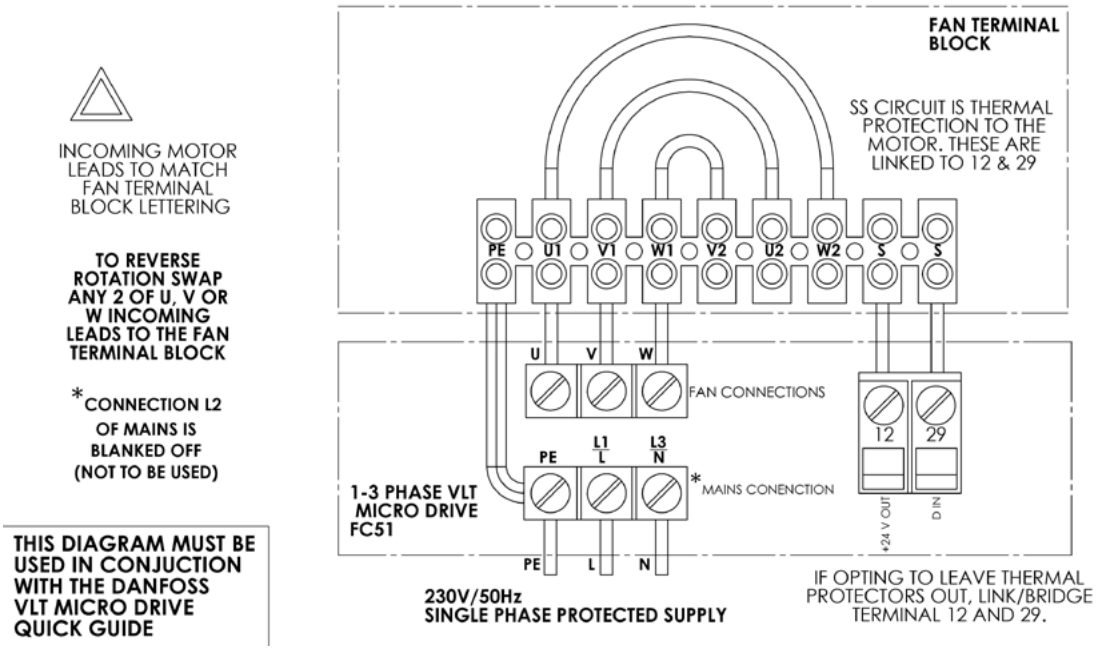

CD3043 - JM BIFURCATED CONNECTED VIA 1 PHASE INVERTER DRIVE INCLUDING POTENTIOMETER

Mode - Auto (Speed controlled via 0-10 volt potentionmeter)

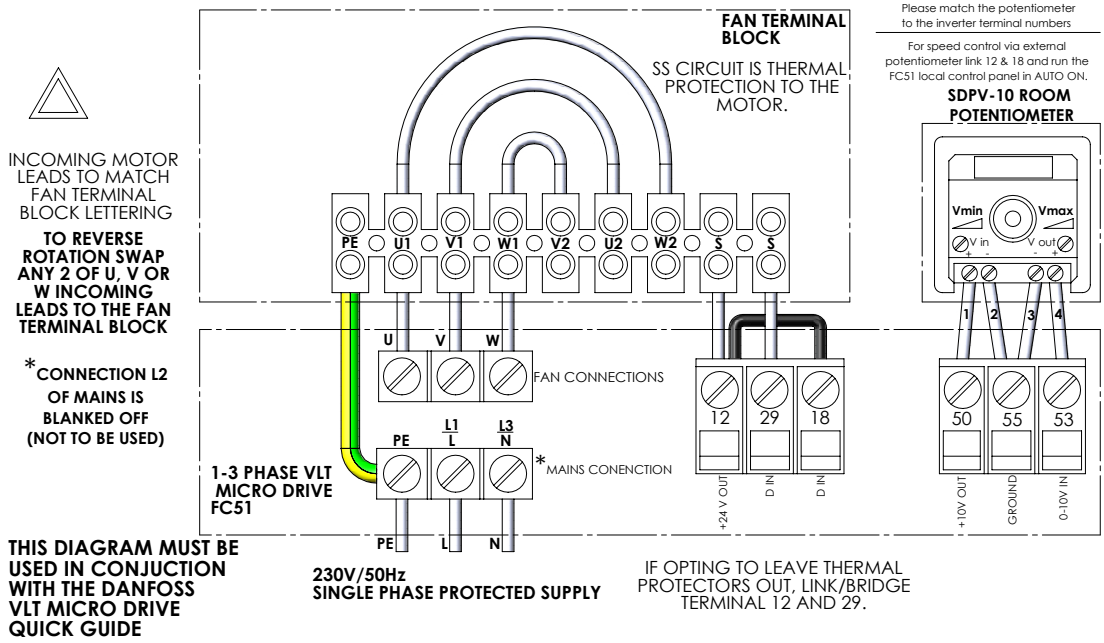

It can also be fitted using a remote switch conntected between 12 & 18

NOTES

CASED AXIAL
BIFURCATED SERIES 33

PRODUCT FACTS

- Air flow up to 0.95 m^3/s
- Static pressures up to 380 Pa
- Suitable for temperatures up to 200°C
- Series 33 is cost effective solution to Bifurcated applications
- Motor protection IP55
- DW172 compliant for solid fuel cooking applications

ELECTRICAL SUPPLY

220-240V/50Hz/1ϕ & 380-420V/50Hz/3ϕ

TEMPERATURE RANGE

Suitable for temperatures between 100°C and 200°C (continuous operation) - exempt from ErP legislation.

SIZES

150, 250 & 300 mm

IMPELLERS

Cast in aluminium silicon alloy and has a fixed pitch aerofoil section blade. This ensures strength, reliability and performance at high temperature.

MOTORS

All motors are totally enclosed fan cooled, class F insulation with motor protection to IP55. All motors are supplied with sealed for life bearings. For higher temperatures please enquire.

CASING

Bifurcated fans are available long case only. Long casing covers impeller and motor and has duct mounted terminal box. The hot dipped galvanised casing gives a high resistance to corrosion. Motor is mounted inside a tunnel, so is 'out of air stream'. Bifurcated fans for external roof mounting, please ensure the motor tunnel is mounted horizontally to avoid water ingress.

TEMPERATURE RANGE

If the temperature of airflow within a bifurcated fan system is excessive, Woods recommend that the fan is allowed to overrun so that any heat is removed from the system. Failure to do this could mean that heat will transfer via the shaft/casing to the motor tunnel, which could cause degradation of the grease and lead to premature failure.

PRODUCT CODE

15JMBif.33 2900

- 15 - denotes the fan impeller diameter in centimetres
- JM Bif - denotes Bifurcated Series 33
- 2900 - denotes speed

ACCESSORIES (Pages 230-237) - CONTROLLERS (Pages 249-297)


Mounting Feet


Flexible Connector


Spring AV's


Flange


Controls Inverter


Rubber AV's

BIFURCATED SERIES 33 PERFORMANCE AND ELECTRICAL DATA

PERFORMANCE CHART - 150-300 MM

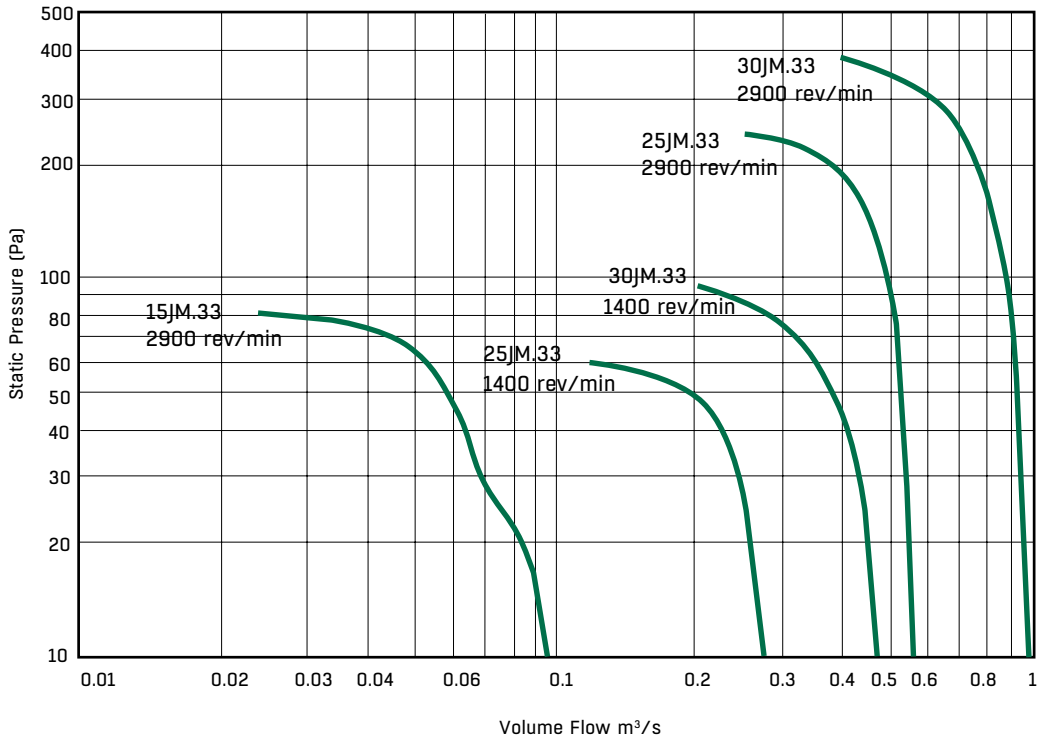

220-240V/50HZ/1ϕ
PRODUCT, ELECTRICAL & PERFORMANCE DETAILS - 150-300 MM

Product Code	Product Number	Speed rev/min	Motor	Rating (kW)	Full Load Current (A)	Starting Current (A)	Wiring Diagram (CD)	Speed Controller Inverter	Inlet Sound Level dBA	m³/s at Pa (Static) 0	25	50	75
15JM.Bif.33	**DB125603**	**2900**	**63**	**0.18**	**1.40**	**4.2**	**CD2426**	**N/A**	**50**	**0.11**	**0.07**	**0.06**	
25JM.Bif.33	**DB215607**	**1400**	**63**	**0.12**	**1.14**	**3.0**	**CD2426**	**N/A**	**46**	**0.29**	**0.25**	**0.19**	
30JM.Bif.33	**DB025607**	**1400**	**63**	**0.12**	**1.14**	**3.0**	**CD2426**	**N/A**	**52**	**0.49**	**0.44**	**0.38**	**0.31**

380-420V/50HZ/3ϕ
PRODUCT, ELECTRICAL & PERFORMANCE DETAILS - 250-300 MM

Product Code	Product Number	Speed rev/min	Motor	Rating (kW)	Full Load Current (A)	Starting Current (A)	Wiring Diagram (CD)	Speed Controller Inverter 3-3Ph	Speed Controller Inverter 1-3Ph	Inlet Sound Level dBA	m³/s at Pa (Static) 0	25	50	75	100	150	200	250	275
25JM.Bif.33	**DB215608**	**1400**	**63**	**0.18**	**0.57**	**2.28**	**CD2416**	**IDDXF54-2.2**	**IEDXB20 4.2**	**46**	**0.29**	**0.25**	**0.19**						
25JM.Bif.33	**DB215609**	**2900**	**71**	**0.37**	**0.90**	**4.95**	**CD2416**	**IDDXF54-2.2**	**IEDXB20 4.2**	**66**	**0.57**	**0.54**	**0.52**	**0.51**	**0.49**	**0.46**	**0.38**		
30JM.Bif.33	**DB025608**	**1400**	**63**	**0.18**	**0.57**	**2.28**	**CD2416**	**IDDXF54-2.2**	**IEDXB20 4.2**	**52**	**0.49**	**0.44**	**0.38**	**0.31**					
30JM.Bif.33	**DB025609**	**2900**	**71**	**0.37**	**0.90**	**4.95**	**CD2416**	**IDDXF54-2.2**	**IEDXB20 4.2**	**71**	**0.98**	**0.96**	**0.93**	**0.91**	**0.88**	**0.83**	**0.77**	**0.7**	**0.44**

Bifurcated fans for external roof mounting, please ensure the motor tunnel is mounted horizontally to avoid water ingress. Sound pressure levels quoted are at the inlet, and are average dBA at 3m distance over a sphere at the mid point at the highest angle given, under free field conditions. These are presented for comparative purposes only. Performance shown at emergency operating temperatures. For speed controllers please see pages 250-297.

1 phase inverter drives are availabe on request, please contact our sales office for more information.

Please note the fan must be re-connected in Delta when using the 1-3 phase inverter drive, use CD2417.

Products in **bold** are available from our UK Distributors on next day delivery, if ordered by 4pm. Please call to confirm availability on 01206 222 580.

DRAWINGS - BIFURCATED SERIES 33

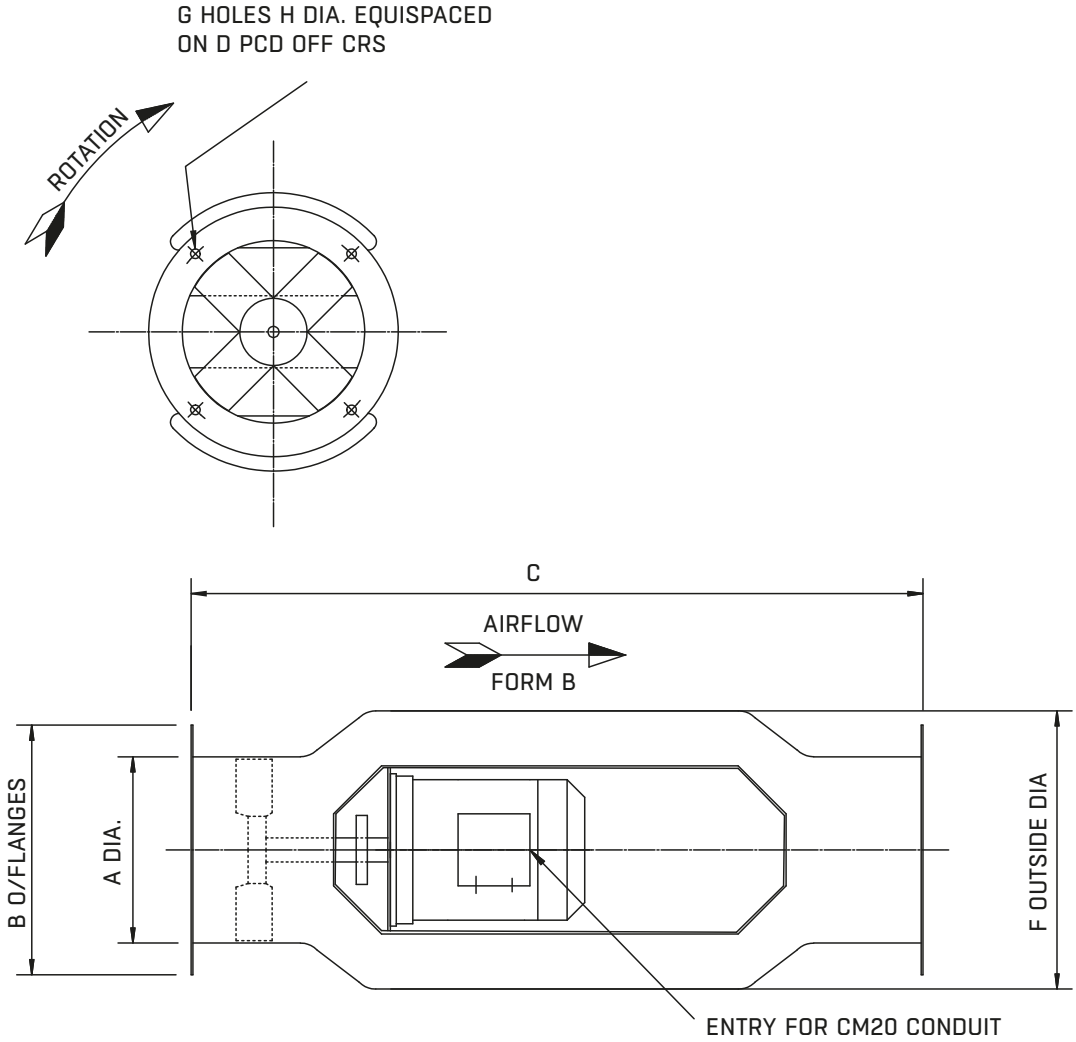

Product Code	Motor Range	Ø A	Ø B	C	D	Ø F	G	Ø H	Weight (kg)
15JM.33	63	155	208	610	184	257	4	8	15
25JM.33	63	254	324	489	299	400	8	10	21
25JM.33	71	254	324	489	299	400	8	10	24
30JM.33	63	305	375	584	349	470	8	10	26
30JM.33	71	305	375	584	349	470	8	10	28

All dimensions in mm.

WIRING DIAGRAMS - BIFURCATED SERIES 33

CD2416

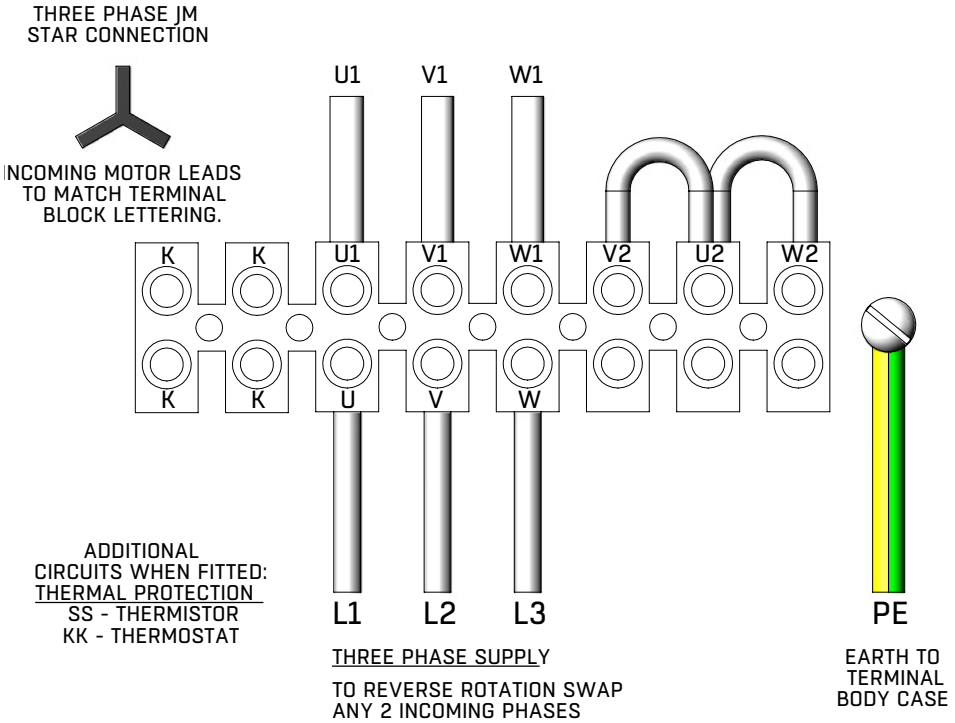

CD2426

SINGLE PHASE
WEG SERIES 33
BIFURCATED

WARNING!
TO REVERSE ROTATION,
INTERCHANGE
LEADS ON TERMINALS
5&8.

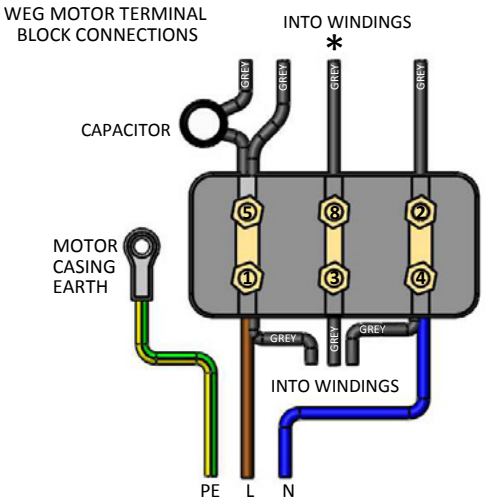

TERMINAL
BLOCK LETTERING
1 = U1
2 = V2
3 = V1
4 = W1
5= W2
8 = U2

ALL INCOMING ELECTRICAL SUPPLIES
TO BE SUITABLY PROTECTED FOR
OVER-CURRENT CONDITIONS

WIRING DIAGRAMS

CD3042 - SERIES 33 BIFURCATED CONNECTED VIA 1 PHASE INVERTER DRIVE

Mode - On hand (Speed controlled via the up and down arrows on key pad)

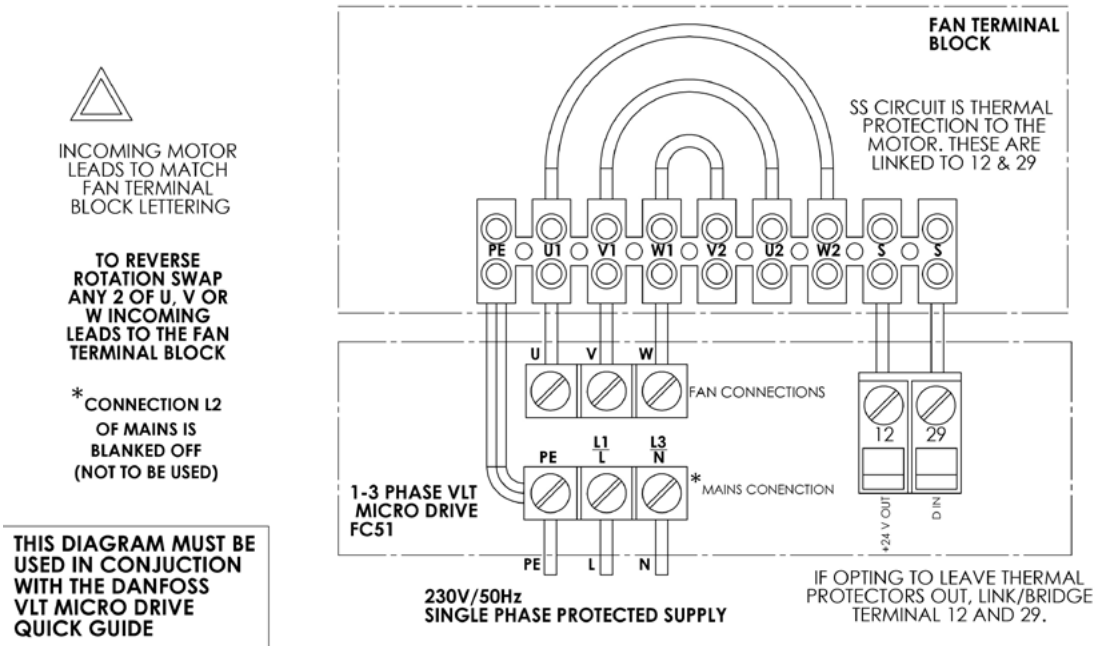

CD3043 - SERIES 33 BIFURCATED CONNECTED VIA 1 PHASE INVERTER DRIVE INCLUDING POTENTIOMETER

Mode - Auto (Speed controlled via 0-10 volt potentionmeter)

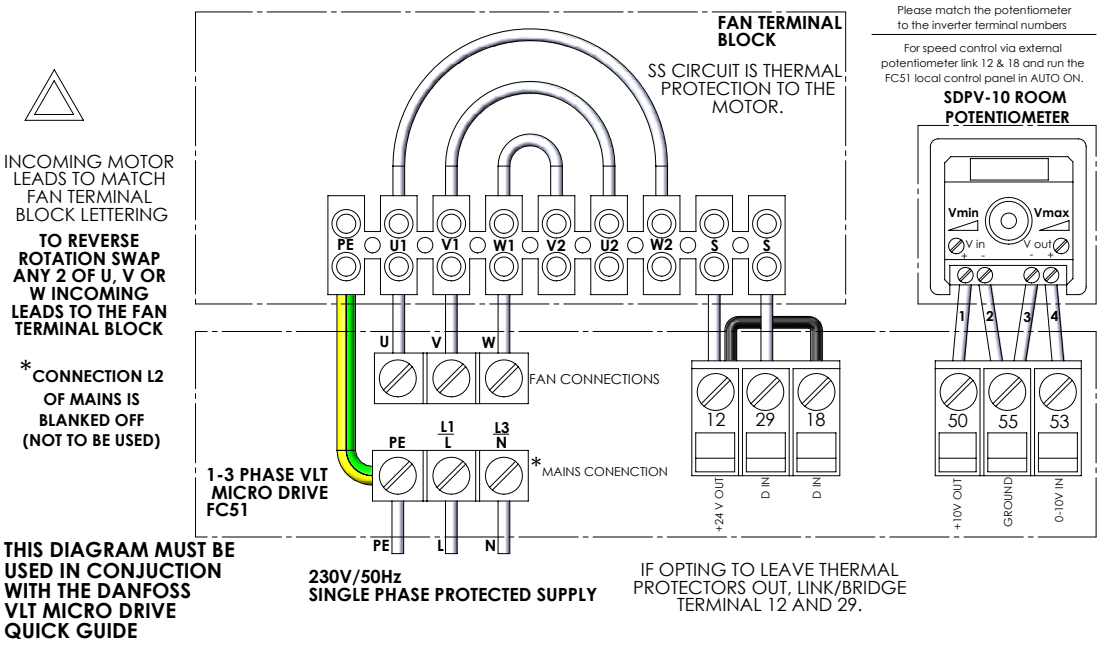

It can also be fitted using a remote switch conntected between 12 & 18

GLEB

Centrifugal Exhaust Fan

Quality ingredients...
...make a quality product

Our Centrifugal Exhaust box fan product has been designed to take account of the fact that it is often located in close proximity to where people are working. The GLEB uses our high efficiency Centriflow Plus impeller, combined with a demand controlled fan speed, to reach the lowest levels for sound and, of course, reduce energy consupmtion and reduce energy costs!

KEY BENEFITS

- Low sound level
- 400°C/2 hours
- Continuous operation 120°C in greasy air conditions
- Suitable for internal or external mounting
- Speed controllable
- Electrical supply: 1ph/230V or 3ph/400V

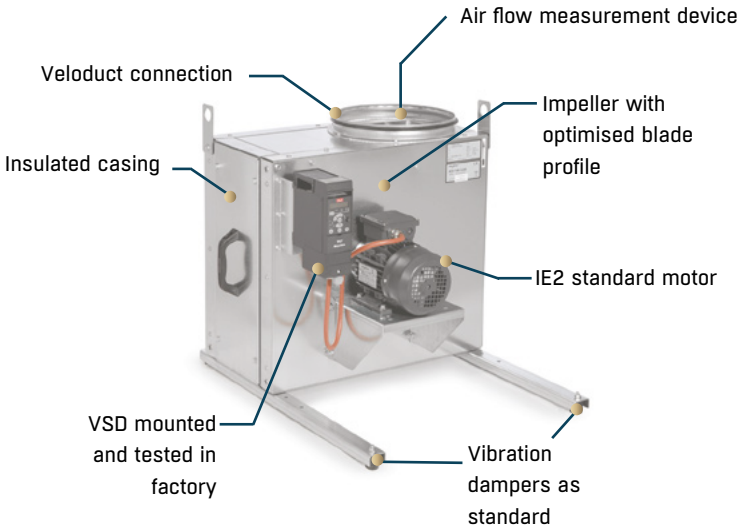

FläktGroup

CENTRIFUGAL EXHAUST FANS
GLEB

PRODUCT FACTS

- Volume flows up to 2.7 m^3/s
- Total pressure up to 1100 Pa
- 400° C/2 hours option available
- Continuous 120° C
- Low sound level
- High efficiency
- Speed controllable
- DW172 compliant for solid fuel cooking applications

ELECTRICAL SUPPLY

230V/50Hz/1ϕ & 400V/50Hz/3ϕ

TEMPERATURE RANGE

From -20°C to +60°C (as standard)

SIZES

250, 315, 400 & 500 mm

FEATURES AND CONSTRUCTION

The fan casing is made of galvanized sheet steel. It is equipped with two inspection hatches, one on each side. Outlet and inlet connections are standard Veloduct component having rubber gasket as standard.

FAN IMPELLER

The fan impeller is made of sheet steel, welded and painted with 60 µm thick epoxy paint (colour RAL 6029 green). The impeller is dynamically balanced to ISO 1940-1973 G 6.3 (size 025) and 2.5 (sizes 031 - 050) at maximum speed. The vibration level of the complete fan is below 7.1 mm/s RMS.

MOTOR

The box fan is supplied with a standard IE2-class 3-phase motor outside of the air stream. The motor is equipped with a thermistor as standard.

SPEED CONTROLLERS

Two different types of VSD are available. 1-phase IP21 class and 3-phase IP54 class drives. If ordered as factory mounted, both versions are connected to the motor, installed to the fan casing and tested.

PRODUCT CODE

GLEB-a-031-3-055-0

- GLEB = Product Name
- a = 1 - Standard or 6 - F400
- 031 = diameter size
- 3 = 3-phase motor
- 055 = 0.55kW motor power
- 0 = version, 0 in the beginning

ACCESSORIES (Pages 238-248) - CONTROLLERS (Pages 249-297)

The range of accessories include safety switches, rain covers, inverter drives, flexible connectors and anti-vibration mounts A quick reference guide is shown below.

Safety Switch

Raincover

Controls Inverter

Flexible Connector

Rubber AV's

PRODUCT AND ELECTRICAL DETAILS

230-240V/50HZ/1ϕ & 380-420V/50HZ/3ϕ

Fan Code	Motor Code	Motor IEC	Max. speed (rpm)	Motor power (kW)	Voltage (V)	Current (A)	Max. Frequency (Hz)	Weight (kg)	Frequency Converter 1x230 V	Max. Input current (A)	Frequency Converter 3x400 V	Max. Input current (A)	Safety Switch
GLEB-1-025-3-037-0	APAL-2-00037-1-2-6	71	2900	0.37	3x230/3x400	1.68/0.97	51.8	55	IEDXB20 4.2	6.1	IDDXF54 2.2	2.1	SAFE-1-0-0
GLEB-6-025-3-037-0	APAL-2-00037-1-2-6	71	2900	0.37	3x230/3x400	1.68/0.97	51.8	55	IEDXB20 4.2	6.1	IDDXF54 2.2	2.1	SAFE-1-0-0
GLEB-1-031-3-055-0	APAL-4-00055-1-2-6	80	2200	0.55	3x230/3x400	2.74/1.58	78.6	75	IEDXB20 4.2	11.6	IDDXF54 2.2	2.1	SAFE-1-0-0
GLEB-6-031-3-055-0	APAL-4-00055-1-2-6	80	2200	0.55	3x230/3x400	2.74/1.58	78.6	75	IEDXB20 4.2	11.6	IDDXF54 2.2	2.1	SAFE-1-0-0
GLEB-1-040-3-110-0	APAL-4-00110-1-2-7	90	2020	1.1	3x230/3x400	4.50/2.60	70.1	102	IEDXB20 6.8	18.7	IDDXF54 3.7	3.5	SAFE-1-0-0
GLEB-6-040-3-110-0	APAL-4-00110-1-2-7	90	2020	1.1	3x230/3x400	4.50/2.60	70.1	102	IEDXB20 6.8	18.7	IDDXF54 3.7	3.5	SAFE-1-0-0
GLEB-1-050-3-220-0	APAL-4-00220-1-2-7	100	1770	2.2	3x230/3x400	8.16/4.71	61.7	142	IEDXB20 9.6	26.4	IDDXF54 5.3	4.7	SAFE-1-0-0
GLEB-6-050-3-220-0	APAL-4-00220-1-2-7	100	1770	2.2	3x230/3x400	8.16/4.71	61.7	142	IEDXB20 9.6	26.4	IDDXF54 5.3	4.7	SAFE-1-0-0

Please note when using the 1 phase inverter drive the motor must be connected in Delta

DRAWING AND DIMENSIONS

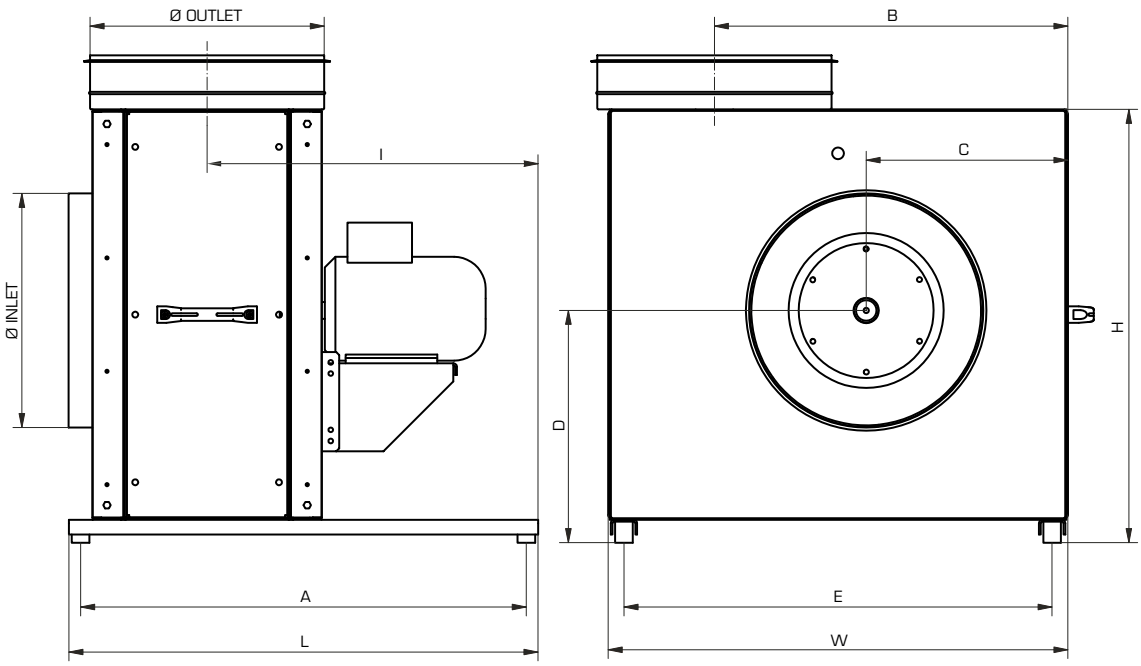

Product Code	A	B	C	D	E	F	H	I	L	W	Ø Inlet	Ø Outlet	Weight Kg
025	560	388	235	282	477	39	516	414	600	527	250	250	55
031	760	465	283	332	587	39	613	592	800	637	315	315	75
040	760	603	344	396	730	92	739	564	800	780	400	400	102
050	760	737	417	472	899	92	888	528	800	949	500	500	142

All dimensions in mm.

Please note other orientations are available, the mounting frame can be removed with the unit mounted flat for bottom inlet applications. For more information please contact our sales office.

PERFORMANCE CHARTS

GLEB WITH DOL 025 TO 050

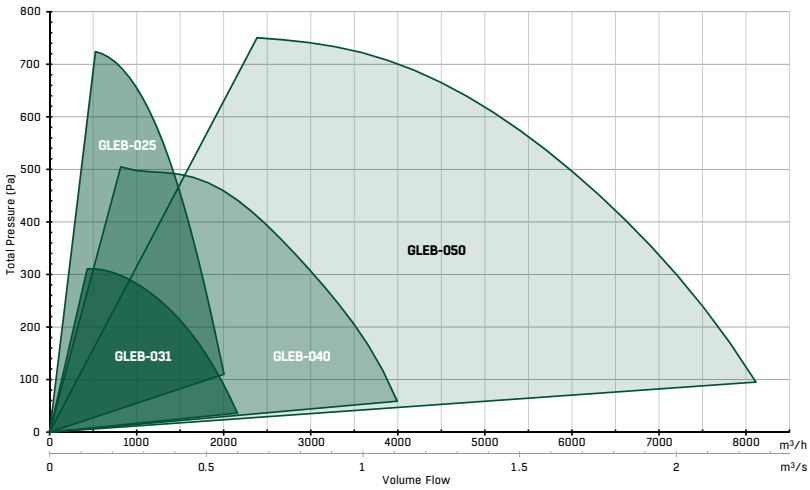

Please note these are total pressure curves, remember to add the velocity head when selecting. If you need any assistance with your selection please contact our sales office.

AIR FLOW AS FUNCTION OF TOTAL PRESSURE WITH DOL

Product Code	m³/s @ Pa (Total)							
	100	150	200	300	400	500	600	700
025	0.65	0.54	0.52	0.49	0.44	0.40	0.33	0.29
031	0.54	0.49	0.43	0.22				
040	1.2	1.0	0.97	0.85	0.69	0.27		
050	2.26	2.26	0.97	2.13	1.84	1.66	1.44	1.12

GLEB WITH INVERTER DRIVE 025 TO 050

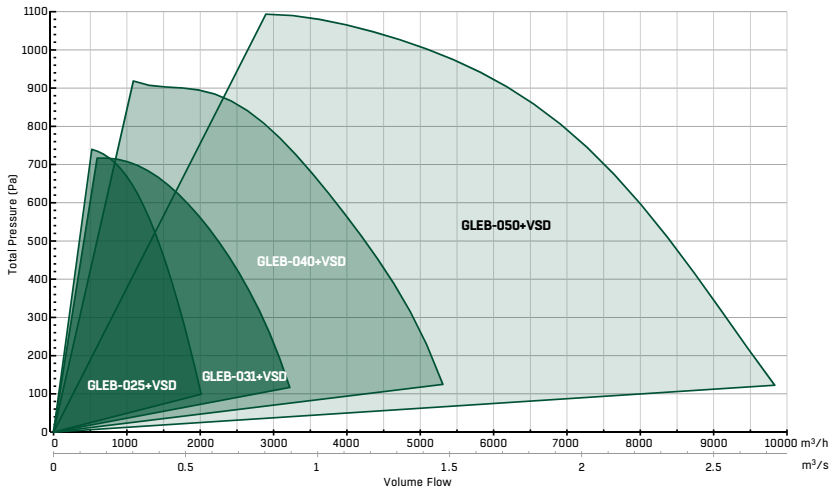

AIR FLOW AS FUNCTION OF TOTAL PRESSURE WITH INVERTER DRIVE

Product Code	m³/s @ Pa (Total)										
	100	150	200	300	400	500	600	700	800	900	1000
025	0.56	0.54	0.53	0.49	0.44	0.39	0.40	0.24			
031	0.91	0.88	0.85	0.78	0.71	0.62	0.51	0.31			
040	1.5	1.47	1.43	1.35	1.27	1.18	1.08	0.96	0.80	0.50	
050	2.75	2.70	2.66	2.56	2.45	2.34	2.06	2.07	1.91	1.72	1.45

ACCESSORIES

SAFETY SWITCH SAFE

The safety isolation switch has been tested to IEC 947-3.
It is avaiable in standard version or in ATEX-version and can be supplied either loose or factory-wired.

Fan code	Motor code	Safety Switch
GLEB-1-025-3-037-0	APAL-2-00037-1-2-6	SAFE-1-0-0
GLEB-1-031-3-055-0	APAL-4-00055-1-2-6	SAFE-1-0-0
GLEB-1-040-3-110-0	APAL-4-00110-1-2-7	SAFE-1-0-0
GLEB-1-050-3-220-0	APAL-4-00220-1-2-7	SAFE-1-0-0
GLEB-6-025-3-037-0	APAL-2-00037-1-2-6	SAFE-1-0-0
GLEB-6-031-3-055-0	APAL-4-00055-1-2-6	SAFE-1-0-0
GLEB-6-040-3-110-0	APAL-4-00110-1-2-7	SAFE-1-0-0
GLEB-6-050-3-220-0	APAL-4-00220-1-2-7	SAFE-1-0-0

FREQUENCY CONVERTER

Motors are 3-phase motors suited for frequency converter operation. Suitable frequency converters and codes can be selected from motor table. If the frequency converter is with single-phase supply, the motor must be Δ-connected (3x230 V). In case of the frequency converter is with three-phase supply, the motor must be Y-connected (3x400V).

Frequency converter ordered together with a rain cover has to be supplied loose because the converter cannot be installed outdoors.

RAIN COVER GLLZ-77-1-ccc-1-0

(ccc = FAN SIZES, E.G. 025)

Can be ordered as an accessory and installed on to the fan.
In case a rain cover is ordered, the eventual frequency converter has to be supplied loose because the converter cannot be installed outdoors.

PRESSURE CONTROLLER STYZ-01-10-0-2

Frequency converter FC controls the fan speed via pressure controller PT + PC so that a constant underpressure is maintained in the duct system. Pressure controller guarantees a higher precision compared to pressure switch.

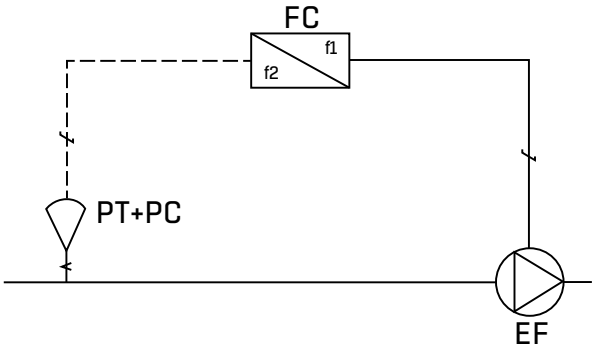

EF = kitchen exhaust fan

FC = frequency converter

PT+PC = pressure controller

ACCESSORIES

AIR FLOW MEASUREMENT GLLZ-09-bbb-1-0

(bbb = FAN SIZES, E.G. 025)

The air flow sensor is used for measuring the air flow of the fan. The method is based on pressure differential. The pressure is measured at the specific point in the inlet cone and the reference pressure is measured upstream of the inlet cone. The air flow is calculated from the equation:

$$Q_v = \frac{\sqrt{\Delta p_m}}{k}$$

Q_v = airflow (m3/s)
k = coefficient of the fan (k-factor)
Δp_m = measured pressure difference (Pa)

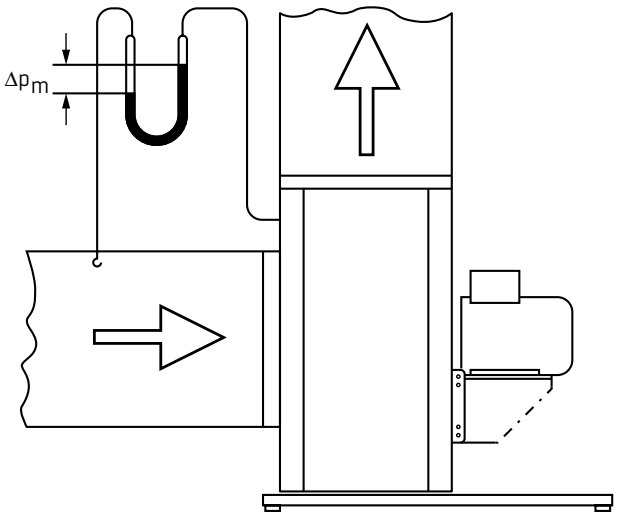

k-FACTOR TABLE

Fan code	k
GLEB-1-025-3-037-0	54,39
GLEB-1-031-3-055-0	34,40
GLEB-1-040-3-110-0	21,18
GLEB-1-050-3-220-0	14,87
GLEB-6-025-3-037-0	54,39
GLEB-6-031-3-055-0	34,40
GLEB-6-040-3-110-0	21,18
GLEB-6-050-3-220-0	14,87

FLEXIBLE CONNECTION

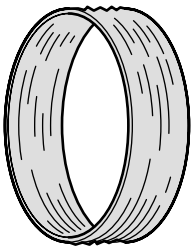

Flexible connection inlet, std	GLLZ-11-1-ccc-1-0
Flexible connection inlet, F400	GLLZ-12-1-ccc-1-0
Flexible connection outlet, std	GLLZ-21-1-ccc-1-0
Flexible connection outlet, F400	GLLZ-22-1-ccc-1-0

where; ccc=fan size, e.g. 025

WIRING DIAGRAM

GLEB CONNECTED TO 1 PHASE INVERTER DRIVE

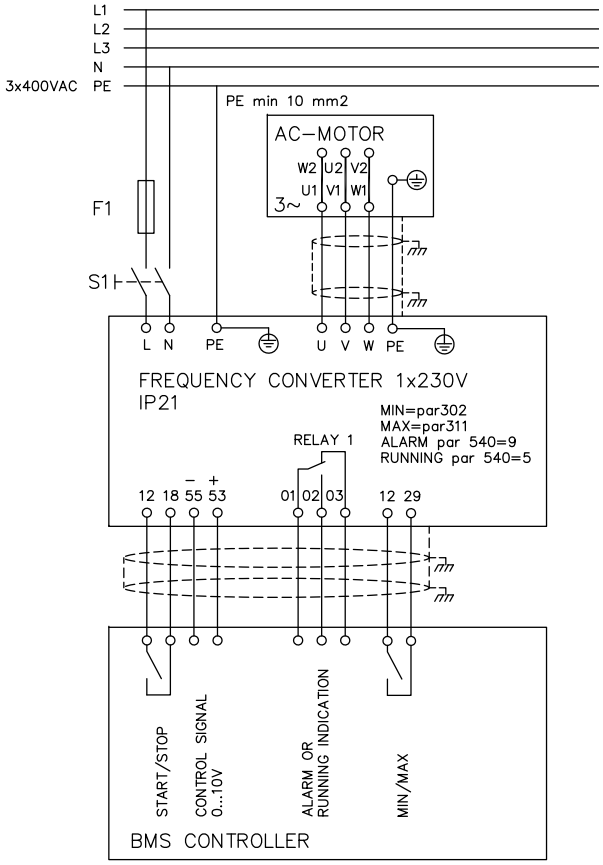

GLEB CONNECTED TO 3 PHASE INVERTER DRIVE

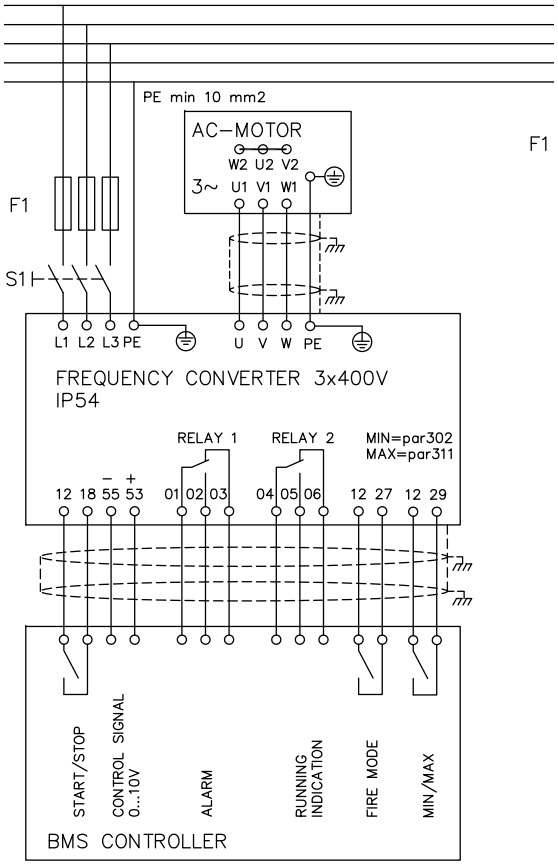

GLEB CONNECTED DIRECT ON LINE

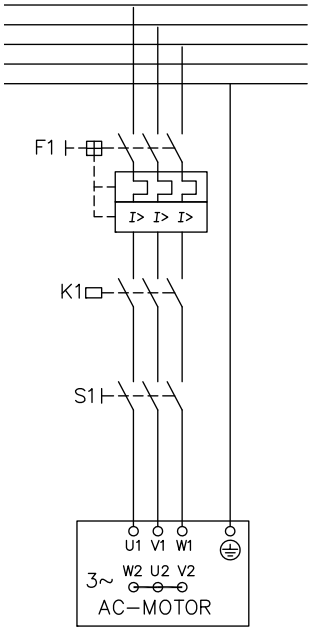

DOL START

POWERBOX FANS
ESTOC TARGE

UP TO 110

PRODUCT FACTS

- Air flow up to 5.7 m^3/s
- Static pressures up to 1400 Pa
- Speed controllable external rotor motors
- Multiple outlet orientations motor located out of air stream
- Air discharged at 90 degrees
- DW172 compliant for solid fuel cooking applications

ELECTRICAL SUPPLY

220-240V/50Hz/1ϕ & 380-420V/50Hz/3ϕ

TEMPERATURE RANGE

Up to 110°C depending on size, see electrical data table on next page for more information.

SIZES

355, 400, 450, 500, 560 and 630 mm

CONSTRUCTION

The Estoc Targe casing is galvanized and made from sheet steel with PentaPost Construction and acoustic insulation made from fibre glass with a thickness of 20 mm.

Can be horizontal or vertical mounted with weather proof hood and has removable side panels. Drip tray included as standard.

IMPELLER

The Estoc Targe is equipped with high efficiency backward curved centrifugal impellers made of aluminium.

MOTOR

Motor is situated out of air stream. The impellers together with the external rotor motors are dynamically balanced to quality standard G2,5 DIN ISO 19410.

SPEED CONTROLLER

Speed is variable using auto transformers and inverter control with auxiliary electronic control option and includes a integrated emergency switch.

PRODUCT CODE

Estoc Targe 50-355-3

- ESTOC TARGE - Product Name
- 50 = Box Size ie, 50 = 500mm; 67 = 670mm; 80 = 800mm; 102 = 1020mm
- 355 = Spigot Diameter size (mm)
- 1 = 1ϕ or 3 = 3ϕ

ACCESSORIES (Pages 238-248) - CONTROLLERS (Pages 249-297)

The range of accessories include dampers, flexible connectors, service doors, outlet covers, guards, side covering and insulating connections. A quick reference guide is shown below.

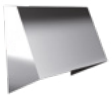
SOC


STP

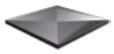
SWR


SFC


Mounting track/SMT


Electronic Controller


Controls Transformer


Controls Inverter

PERFORMANCE & ELECTRICAL DATA

220-240V/50Hz/1ϕ & 380-420V/50HZ/3ϕ

PERFORMANCE TABLE

Product Code	m³/s @ Pa (Static)													
	0	50	100	150	200	250	300	350	400	450	500	550	600	650
Estoc Targe 50-355-1	0.8	0.73	0.66	0.6	0.53	0.45	0.35	0.23	0.08					
Estoc Targe 67-400-1	1.28	1.2	1.12	1.03	0.94	0.84	0.74	0.62	0.49	0.31	0.09			
Estoc Targe 67-450-1	1.78	1.71	1.64	1.57	1.49	1.41	1.32	1.22	1.12	1.01	0.89	0.75	0.58	0.3

Product Code	m³/s @ Pa (Static)														
	0	100	200	300	400	500	600	700	800	900	1000	1100	1200	1300	1400
Estoc Targe 50-355-3	0.85	0.72	0.53	0.32	0.05										
Estoc Targe 67-400-3	1.24	1.08	0.87	0.65	0.36										
Estoc Targe 67-450-3	1.8	1.66	1.51	1.35	1.15	0.89	0.52								
Estoc Targe 80-500-3	2.49	2.33	2.16	1.98	1.77	1.54	1.25	0.82	0.22						
Estoc Targe 80-560-3	3.22	3.06	2.89	2.71	2.52	2.31	2.08	1.8	1.35	0.64					
Estoc Targe 80-630-3	4.05	3.91	3.76	3.62	3.46	3.29	3.1	2.89	2.67	2.42	2.13	1.72	0.88	0.06	
Estoc Targe 102-630-3	5.75	5.56	5.38	5.18	4.98	4.77	4.53	4.27	3.98	3.64	3.26	2.82	2.34	1.76	0.71

PRODUCT AND ELECTRICAL DETAILS

Product Code	Product Number	Speed rpm	Motor Frame	Electrical Supply	Electrical Current			Wiring Diagrams	**Speed Controllers		Maximum Operating Temp°C	Breakout
					Motor (kW)	Full Load Current (A)	Starting Current (A)		Electronic	Transformer		*Sound Level db(A) (3m)
Estoc Targe 50-355-1	**GF503551**	**1360**	**Integral**	**220-240 V/50 Hz/1 Ph**	**0.3**	**1.4**	**3.5**	**CD3006**	**ME1.3**	**TEID 1.5**	**110**	**35**
Estoc Targe 67-400-1	**GF674001**	**1270**	**Integral**	**220-240 V/50 Hz/1 Ph**	**0.5**	**2.2**	**4.8**	**CD3006**	**ME1.3**	**TEID 2.2**	**90**	**39**
Estoc Targe 67-450-1	**GF674501**	**1380**	**Integral**	**220-240 V/50 Hz/1 Ph**	**1**	**5.4**	**12**	**CD3006**	**ME1.6**	**TEID 5**	**80**	**44**

Product Code	Product Number	Speed rpm	Motor Frame	Electrical Supply	Electrical Current			Wiring Diagrams	**Speed Controllers		Maximum Operating Temp°C	Breakout
					Motor (kW)	Full Load Current (A)	Starting Current (A)		Transformer	Inverter		*Sound Level db(A) (3m)
Estoc Targe 50-355-3	**GF503553**	**1360**	**Integral**	**380-420 V/50 Hz/3 Ph**	**0.3**	**0.7**	**2.6**	**CD3031**	**TDID 2.5**	**IDDXF54 2.2**	**110**	**35**
Estoc Targe 67-400-3	**GF674003**	**1240**	**Integral**	**380-420 V/50 Hz/3 Ph**	**0.5**	**1**	**2.8**	**CD3031**	**TDID 2.5**	**IDDXF54 2.2**	**100**	**38**
Estoc Targe 67-450-3	**GF674503**	**1380**	**Integral**	**380-420 V/50 Hz/3 Ph**	**0.9**	**1.8**	**8.8**	**CD3031**	**TDID 2.5**	**IDDXF54 2.2**	**100**	**44**
Estoc Targe 80-500-3	**GF805003**	**1380**	**Integral**	**380-420 V/50 Hz/3 Ph**	**1.5**	**3**	**15**	**CD3032**	**TDID 4**	**IDDXF54 3.7**	**90**	**47**
Estoc Targe 80-560-3	**GF805607**	**1410**	**Integral**	**380-420 V/50 Hz/3 Ph**	**2.5**	**7**	**25**	**CD3032**	**TDID 8**	**IDDXF54 7.2**	**100**	**49**
Estoc Targe 80-630-3	**GF806303**	**1445**	**Integral**	**380-420 V/50 Hz/3 Ph**	**4.4**	**8**	**46**	**CD3032**	**-**	**IDDXF54 9**	**90**	**53**
Estoc Targe 102-630-3	**GF106303**	**1460**	**Integral**	**380-420 V/50 Hz/3 Ph**	**6**	**11**	**62.6**	**CD3032**	**-**	**IDDXF54 12**	**75**	**91**

*Sound power levels are average dBA at 3 metres distance over sphere, under free field conditions and are presented for comparative purposes only. Values shown are those at the mid-point of the performance curve. **For speed controllers, please see pages 219-267. For ErP efficiency ratings and grades please refer to our Fan Selector for more information.

Products in **bold** are available from our UK Distributors on next day delivery, if ordered by 4pm. Please call to confirm availability on 01206 222 580.

DRAWINGS AND DIMENSIONS

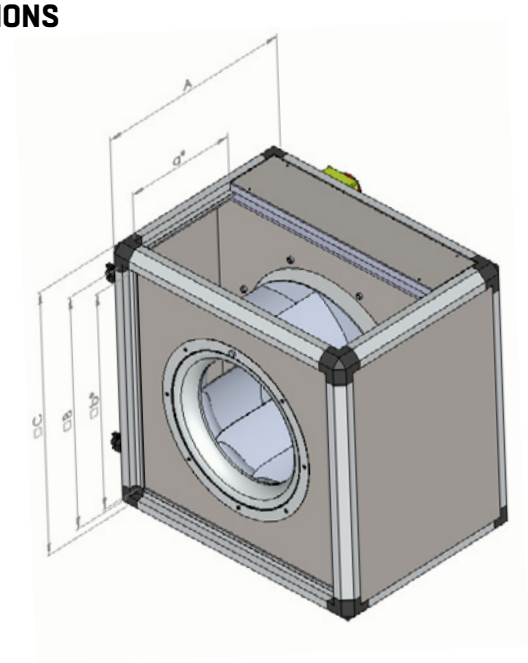

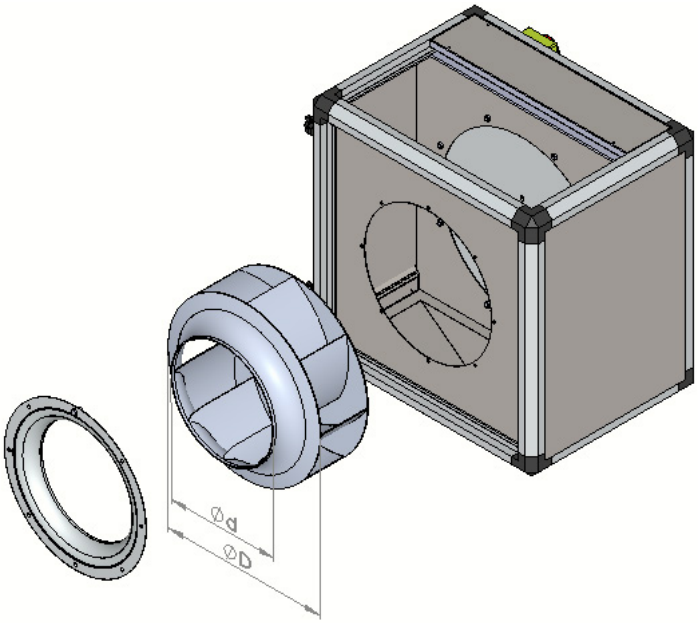

Product Code	A	a*	B	b*	C	Ø D	Ø d	Weight Max (kg)
ESTOC TARGE 50-355	420	190	410	380	500	365	228	36
ESTOC TARGE 67-400	500	230	580	550	670	404	257	55
ESTOC TARGE 67-450	500	230	580	550	670	545	289	62
ESTOC TARGE 80-500	590	310	710	680	800	504	325	95
ESTOC TARGE 80-560	740	310	710	680	800	570	362	100
ESTOC TARGE 80-630	800	310	710	680	800	640	410	105
ESTOC TARGE 102-630	880	370	930	900	1020	640	410	165

All dimensions shown in mm

Products in **bold** are available from our UK Distributors on next day delivery, if ordered by 4pm. Please call to confirm availability on 01206 222 580.

PERFORMANCE CHARTS

ESTOC TARGE 50-355-1 - GF503551

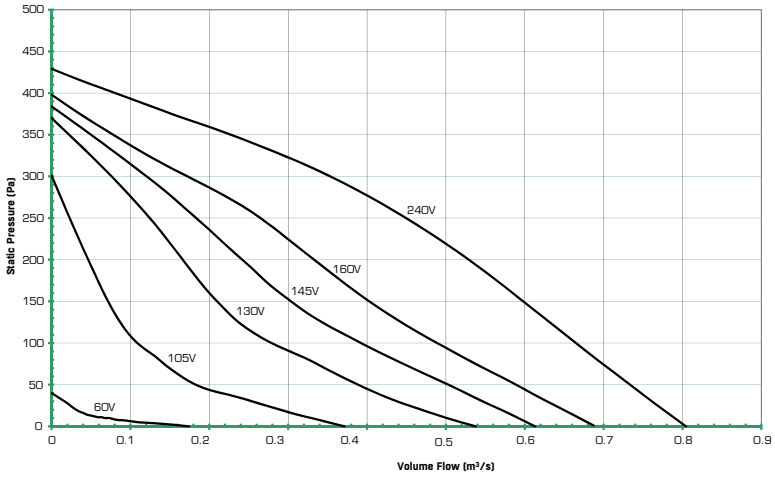

ESTOC TARGE 67-400-1 - GF674001

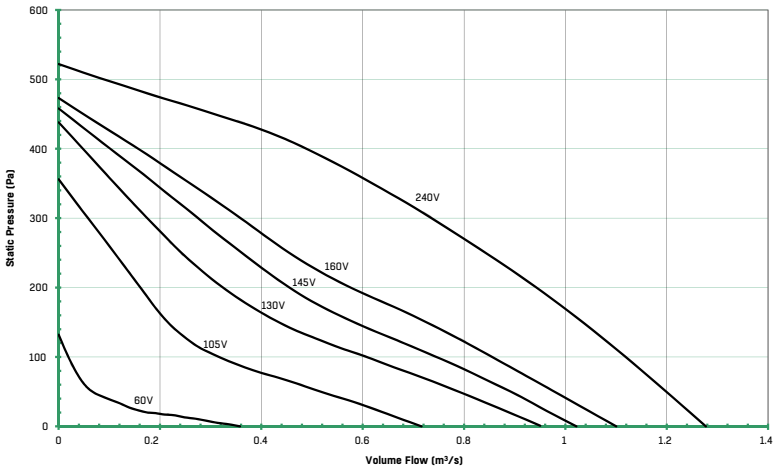

ESTOC TARGE 67-450-1 - GF674501

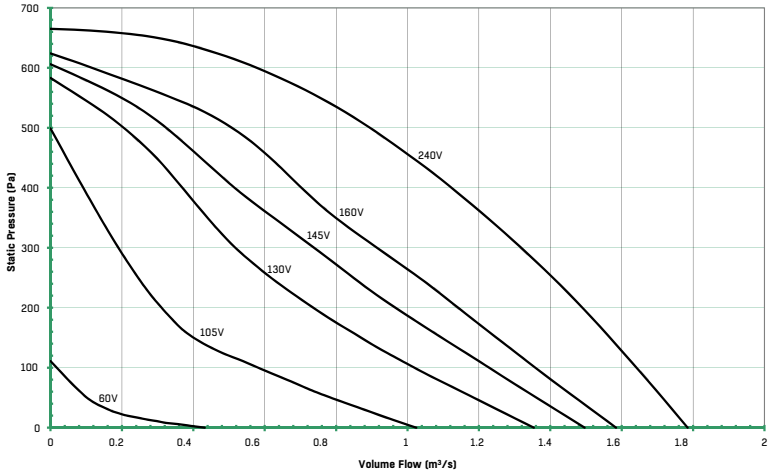

PERFORMANCE CHARTS

ESTOC TARGE 50-355-3 - GF503553

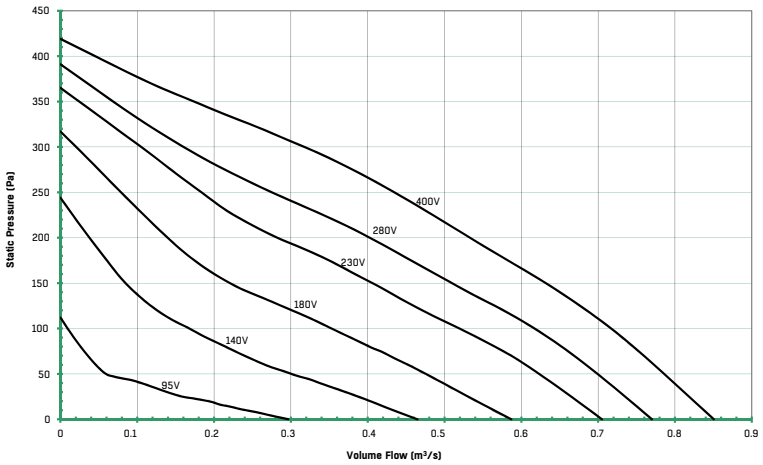

ESTOC TARGE 67-400-3 - GF674003

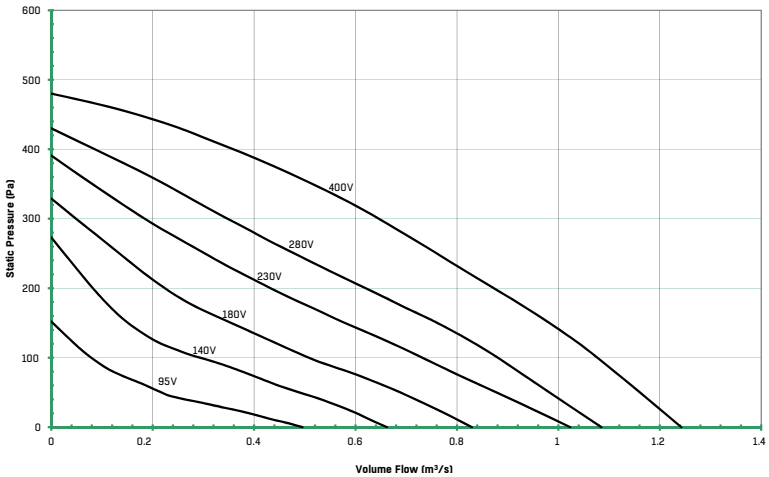

ESTOC TARGE 67-450-3 - GF674503

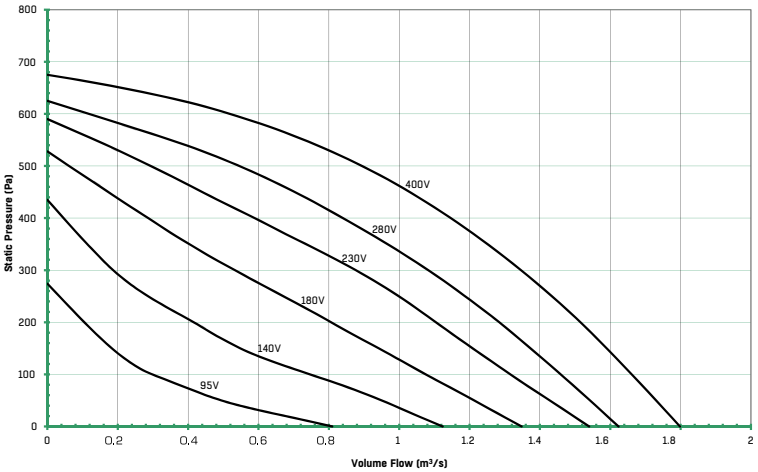

PERFORMANCE CHARTS

ESTOC TARGE 80-500-3 - GF805003

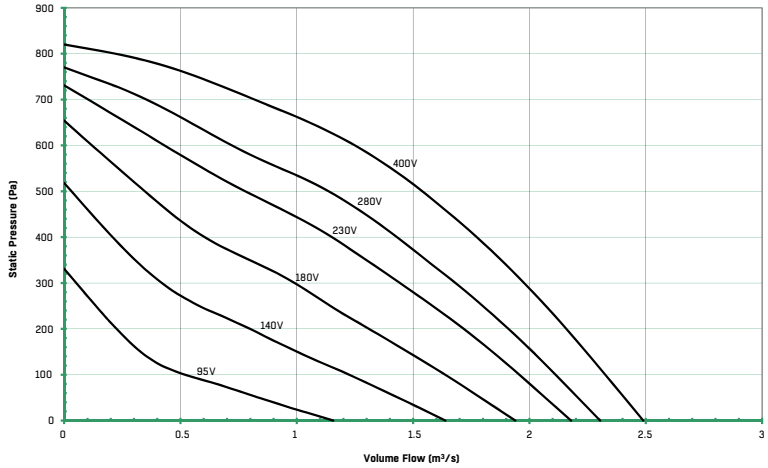

ESTOC TARGE 80-560-3 - GF805607

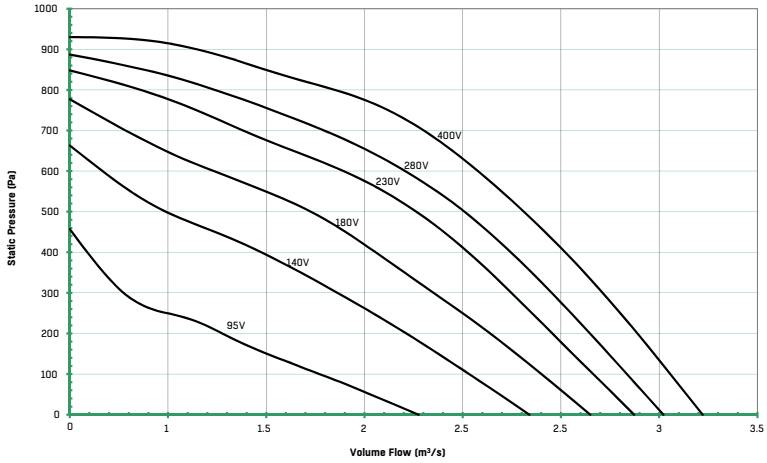

ESTOC TARGE 80-630-3 - GF806303

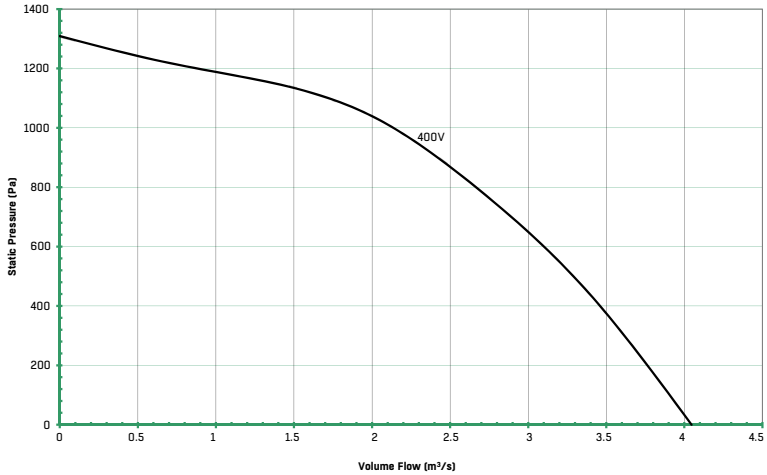

PERFORMANCE CHARTS

ESTOC TARGE 102-630-3 - GF106303

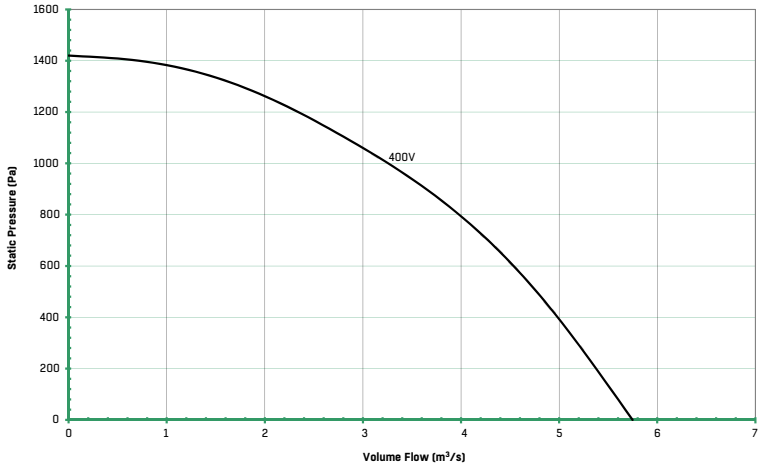

INSTALLATION GUIDE

Outdoor installation PowerBox GF Estoc Targe
Axial air flow (90° discharge available)

All accessories supplied separately

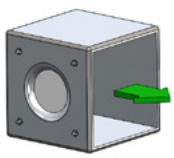

Centrifugal Discharge

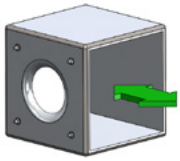

Centrifugal on both sides - free discharge

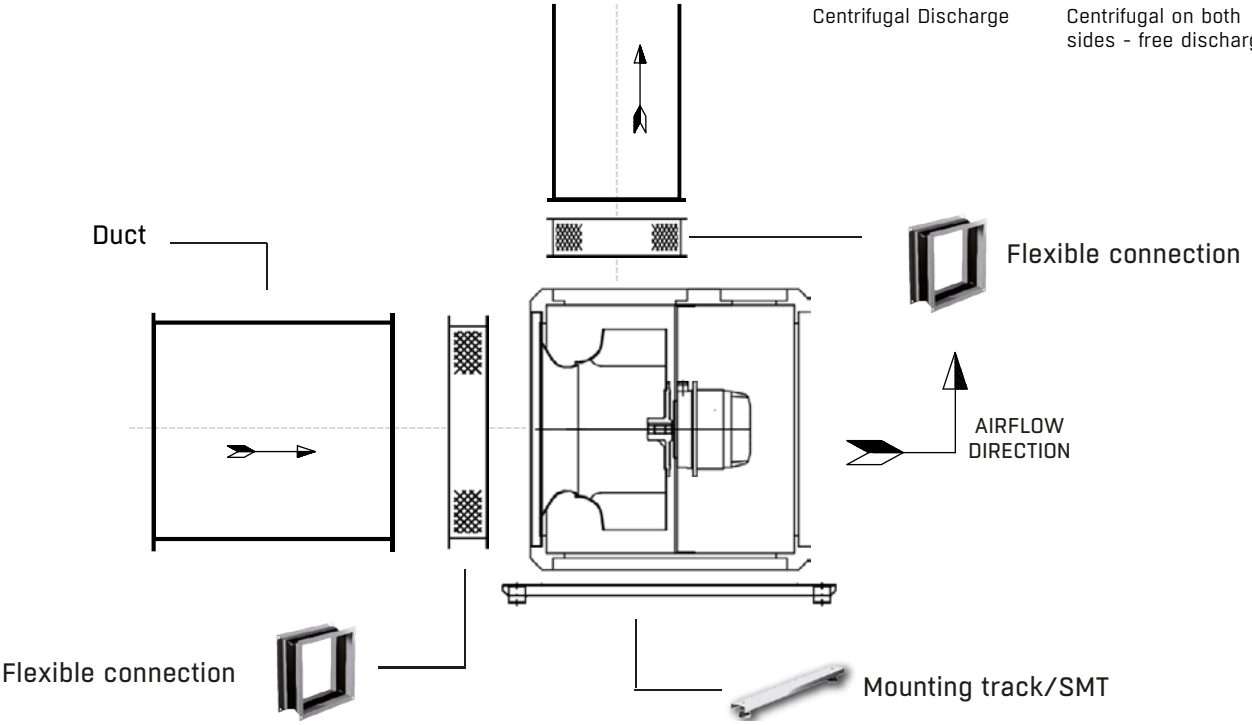

When the Estoc Targe is used externally with a horizontal outlet an additional weather roof/cowl is available if required.

WIRING DIAGRAMS - ESTOC TARGE

CD3006

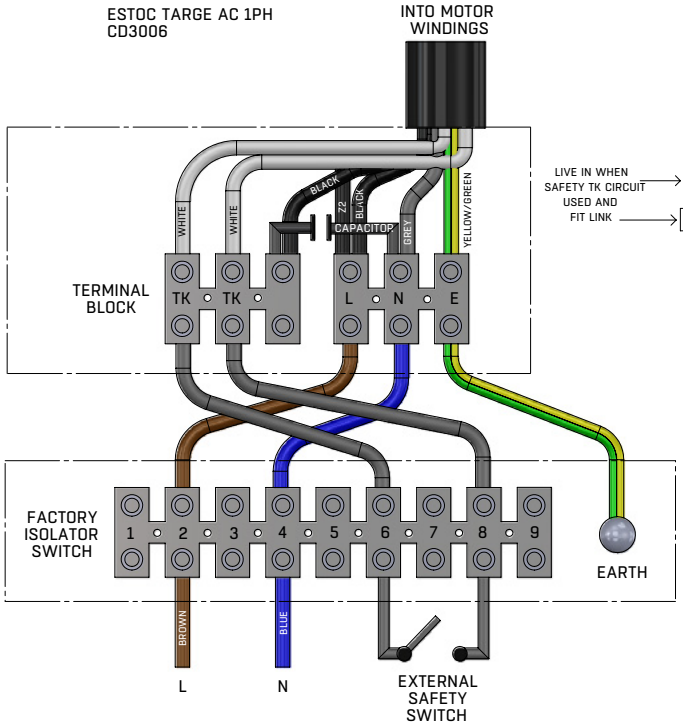

ISOLATOR		OUTPUT
8	TK	WHITE
6	TK	WHITE
2	L	Z2
4	N	V2

CD3031

355-450

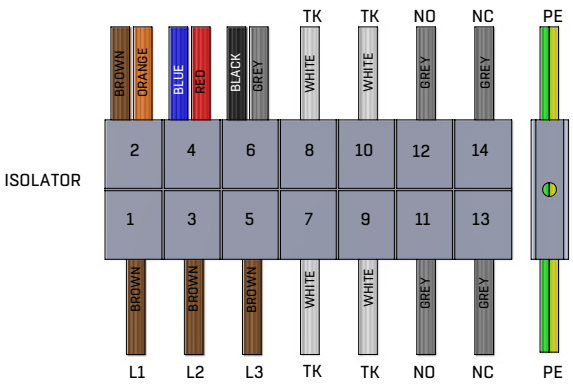

CD3032

500-630

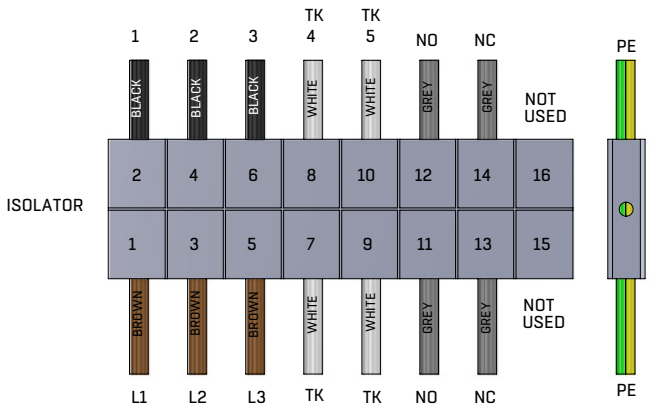

POWERBOX FANS
ESTOC TARGE EC

PRODUCT FACTS

- Air flow up to 3.7 m^3/s
- Static pressures up to 1000 Pa
- Controllable EC motors
- Multiple outlet orientations motor located out of air stream
- Air discharged at 90 degrees
- DW172 compliant for solid fuel cooking applications

ELECTRICAL SUPPLY

220-240V/50Hz/1ϕ & 380-420V/50Hz/3ϕ

TEMPERATURE RANGE

Up to 120°C depending on size, see electrical data table on next page for more information.

SIZES

355, 400, 450, 500, 560 and 630 mm

CONSTRUCTION

The Estoc Targe EC casing is galvanized and made from sheet steel with PentaPost Construction and acoustic insulation made from fibre glass with a thickness of 20 mm.

Can be horizontal or vertical mounted with weather proof hood and has removable side panels. Drip tray included as standard.

IMPELLER

The Estoc Targe EC is equipped with high efficiency backward curved centrifugal impellers made of aluminium.

MOTOR

Motor is situated out of air stream. The impellers together with the external rotor motors are dynamically balanced to quality standard G2,5 DIN ISO 19410. The used EC-motors are characterized by a very high efficiency in full-load and part-load operation. They are easy to connect, individually reconfigured, they have a compact design and a high power density.

The implementation of additional functions like airflow or pressure regulation is possible.

SPEED CONTROLLER

Speed is variable using a 0-10 volt potentiometer.

PRODUCT CODE

ESTOC TARGE EC 50-355-3

- ESTOC TARGE EC - Product Name
- 50 = Box Size ie, 50 = 500mm; 67 = 670mm; 80 = 800mm; 102 = 1020mm
- 355 = Spigot Diameter size (mm)
- 1 = 1ϕ or 3 = 3ϕ

ACCESSORIES (Pages 238-248) - CONTROLLERS (Pages 249-297)

The range of accessories include dampers, flexible connectors, service doors, outlet covers, guards, side covering and insulating connections. A quick reference guide is shown below.

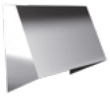

SOC

STP

SWR

SFC

Mounting track/SMT

0-10 V Potentiometer

PERFORMANCE & ELECTRICAL DATA

220-240V/50Hz/1ϕ & 380-420V/50HZ/3ϕ

PERFORMANCE TABLE

Product Code	m³/s @ Pa (Static)																			
	0	25	50	75	100	125	150	175	200	225	250	275	300	325	350	375	400	425	450	475
ESTOC TARGE EC 50-355-1	0.9	0.88	0.86	0.83	0.81	0.78	0.75	0.72	0.69	0.66	0.62	0.59	0.54	0.5	0.43	0.33	0.19			
ESTOC TARGE EC 67-400-1	1.25	1.22	1.19	1.16	1.13	1.09	1.06	1.02	0.98	0.93	0.88	0.83	0.78	0.72	0.66	0.57	0.37			
ESTOC TARGE EC 67-450-1	1.58	1.54	1.51	1.47	1.43	1.4	1.36	1.32	1.28	1.23	1.18	1.13	1.07	1.01	0.93	0.85	0.74	0.62	0.3	0.05

Product Code	m³/s @ Pa (Static)																					
	0	50	100	150	200	250	300	350	400	450	500	550	600	650	700	750	800	850	900	950	1000	1050
ESTOC TARGE EC 50-355-3	0.91	0.86	0.8	0.75	0.69	0.62	0.54	0.43	0.21													
ESTOC TARGE EC 67-400-3	1.33	1.27	1.21	1.15	1.08	1.01	0.92	0.81	0.69	0.48												
ESTOC TARGE EC 67-450-3	1.79	1.73	1.67	1.61	1.54	1.47	1.39	1.3	1.2	1.07	0.92	0.71	0.14									
ESTOC TARGE EC 80-500-3	2.5	2.43	2.37	2.3	2.23	2.15	2.07	1.98	1.87	1.75	1.64	1.52	1.39	1.25	1	0.52						
ESTOC TARGE EC 80-560-3	3.03	2.96	2.89	2.82	2.74	2.66	2.59	2.5	2.42	2.32	2.23	2.12	2.01	1.88	1.74	1.55	1.02	0.33				
ESTOC TARGE EC 80-630-3	3.68	3.6	3.53	3.45	3.37	3.3	3.22	3.13	3.05	2.97	2.88	2.8	2.7	2.6	2.49	2.36	2.2	2.01	1.74	1.23	0.41	0.1

PRODUCT AND ELECTRICAL DETAILS

Product Code	Product Number	Speed rpm	Motor Frame	Electrical Supply	Electrical Current			Wiring Diagrams	**Speed Controllers	Maximum Operating Temp°C	Breakout
					Motor (kW)	Full Load Current (A)	Starting Current (A)		Potentiometer		*Sound Level db(A) (3m)
ESTOC TARGE EC 50-355-1	GF503555	1500	Integral	220-240 V/50 Hz/1 Ph	0.36	1.5	1.5	1.451	0-10 V Pot	120	36
ESTOC TARGE EC 67-400-1	GF674005	1320	Integral	220-240 V/50 Hz/1 Ph	0.43	1.8	1.8	1.451	0-10 V Pot	120	41
ESTOC TARGE EC 67-450-1	GF674506	1230	Integral	220-240 V/50 Hz/1 Ph	0.65	2.8	2.8	1.451	0-10 V Pot	120	42

Product Code	Product Number	Speed rpm	Motor Frame	Electrical Supply	Electrical Current			Wiring Diagrams	**Speed Controllers	Maximum Operating Temp°C	Breakout
					Motor (kW)	Full Load Current (A)	Starting Current (A)		Potentiometer		*Sound Level db(A) (3m)
ESTOC TARGE EC 50-355-3	GF503556	1500	Integral	380-420 V/50 Hz/3 Ph	0.36	0.7	0.7	1.451	0-10 V Pot	120	37
ESTOC TARGE EC 67-400-3	GF674006	1500	Integral	380-420 V/50 Hz/3 Ph	0.62	1.2	1.2	1.451	0-10 V Pot	120	43
ESTOC TARGE EC 67-450-3	GF674507	1400	Integral	380-420 V/50 Hz/3 Ph	0.95	1.7	1.7	1.451	0-10 V Pot	120	45
ESTOC TARGE EC 80-500-3	GF805006	1400	Integral	380-420 V/50 Hz/3 Ph	1.45	2.4	2.4	1.451	0-10 V Pot	120	48
ESTOC TARGE EC 80-560-3	GF805608	1400	Integral	380-420 V/50 Hz/3 Ph	2.3	3.6	3.6	1.451	0-10 V Pot	120	50
ESTOC TARGE EC 80-630-3	GF806306	1350	Integral	380-420 V/50 Hz/3 Ph	3.6	5.5	5.5	1.451	0-10 V Pot	120	51

*Sound power levels are average dBA at 3 metres distance over sphere, under free field conditions and are presented for comparative purposes only. Values shown are those at the mid-point of the performance curve. **For speed controllers, please see pages 250-297. For ErP efficiency ratings and grades please refer to our Fan Selector for more information.

Products in **bold** are available from our UK Distributors on next day delivery, if ordered by 4pm. Please call to confirm availability on 01206 222 580.

DRAWINGS AND DIMENSIONS

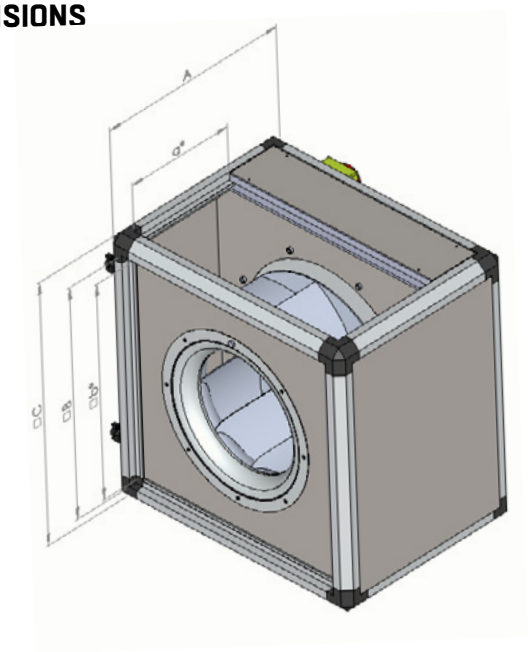

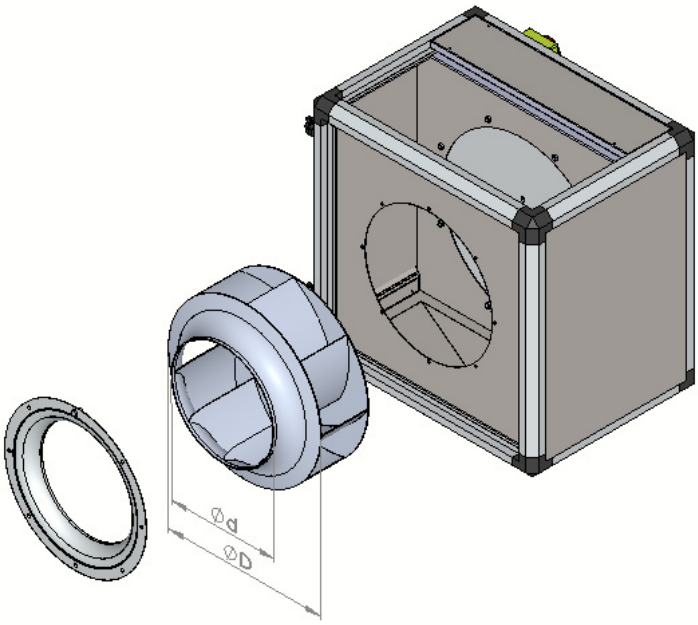

Product Code	A	a*	B	b*	C	Ø D	Ø d	Weight Max (kg)
ESTOC TARGE EC 50-355	420	190	410	380	500	365	228	36
ESTOC TARGE EC 67-400	500	230	580	550	670	404	257	55
ESTOC TARGE EC 67-450	500	230	580	550	670	545	289	62
ESTOC TARGE EC 80-500	590	310	710	680	800	504	325	95
ESTOC TARGE EC 80-560	740	310	710	680	800	570	362	100
ESTOC TARGE EC 80-630	800	310	710	680	800	640	410	105
ESTOC TARGE EC 102-630	880	370	930	900	1020	640	410	165

All dimensions shown in mm

Products in **bold** are available from our UK Distributors on next day delivery, if ordered by 4pm. Please call to confirm availability on 01206 222 580.

PERFORMANCE CHARTS

ESTOC TARGE EC 50-355-1 - GF503555

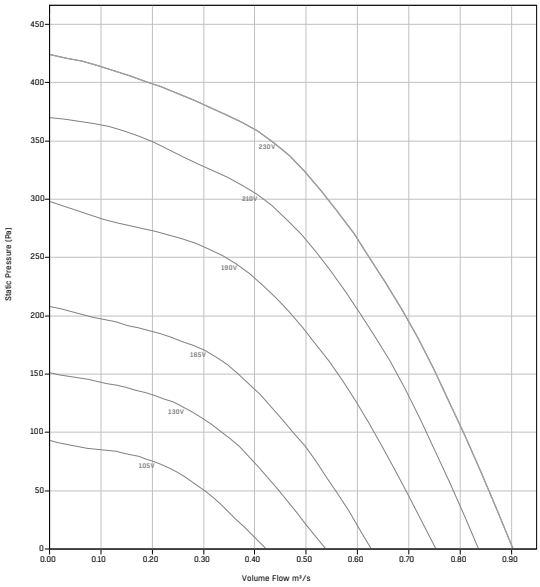

ESTOC TARGE EC 67-400-1 - GF674005

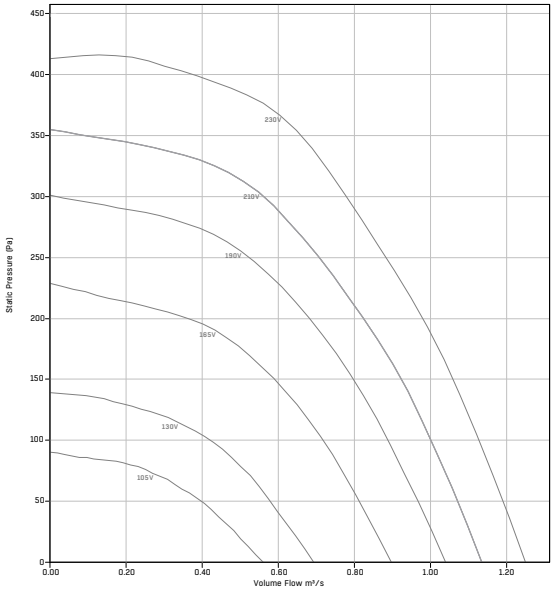

ESTOC TARGE EC 67-450-1 - GF674506

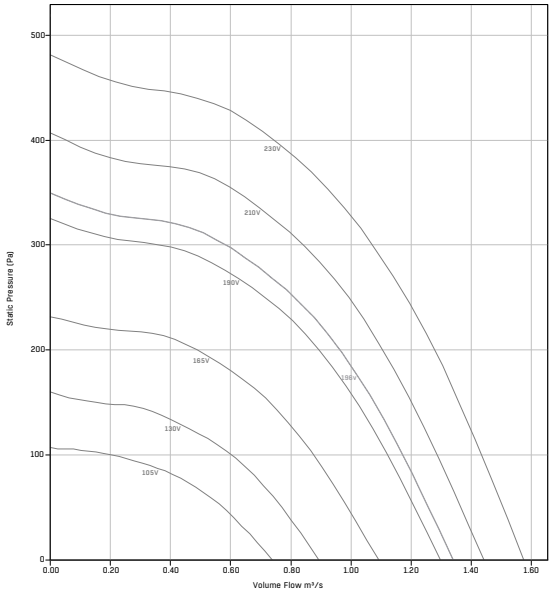

PERFORMANCE CHARTS

ESTOC TARGE EC 50-355-3 - GF503556

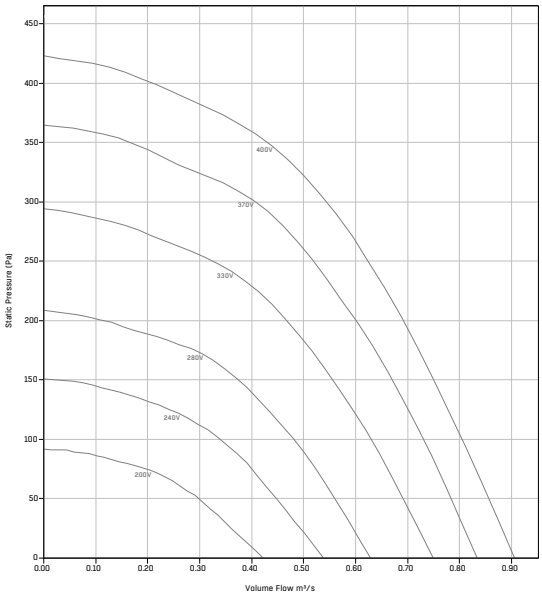

ESTOC TARGE EC 67-400-3 - GF674006

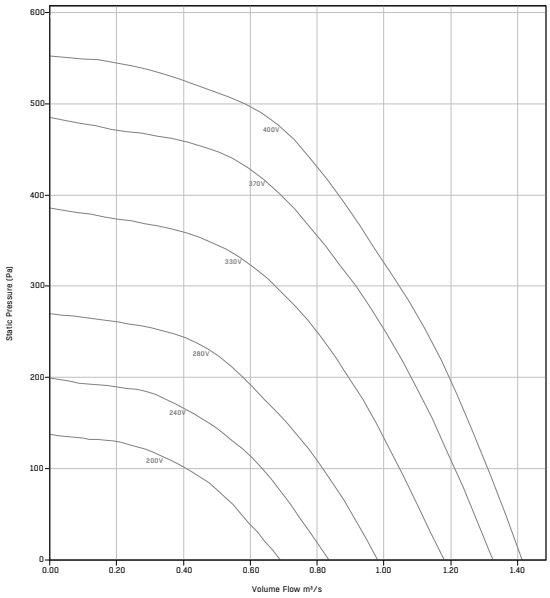

ESTOC TARGE EC 67-450-3 - GF674507

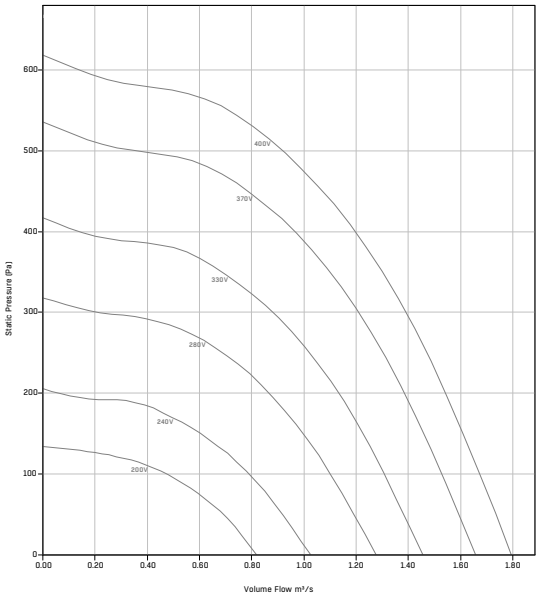

ESTOC TARGE EC 80-500-3 - GF805006

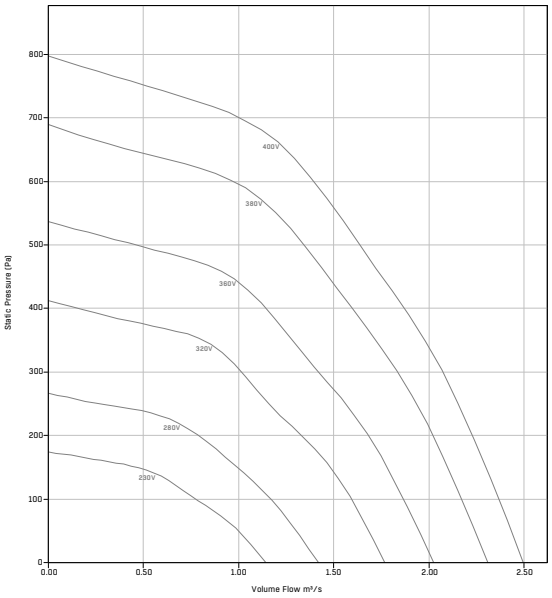

PERFORMANCE CHARTS

ESTOC TARGE EC 80-560-3 - GF805608

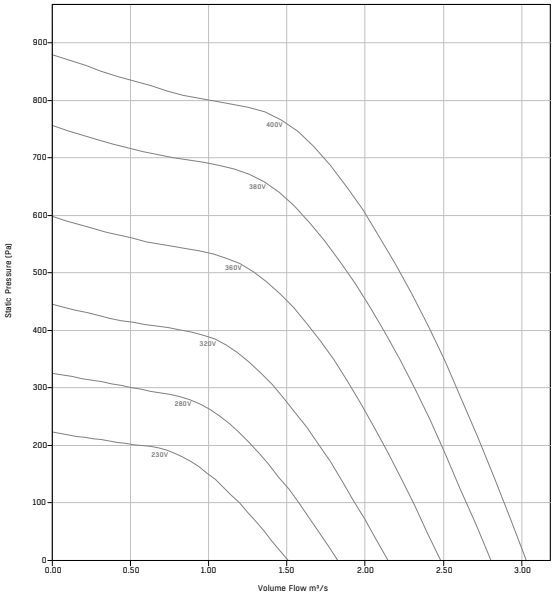

ESTOC TARGE EC 80-630-3 - GF806306

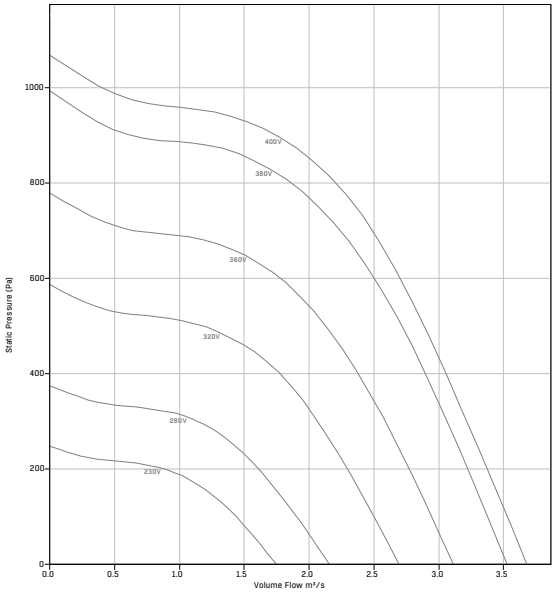

WIRING DIAGRAMS - ESTOC TARGE EC

1.451

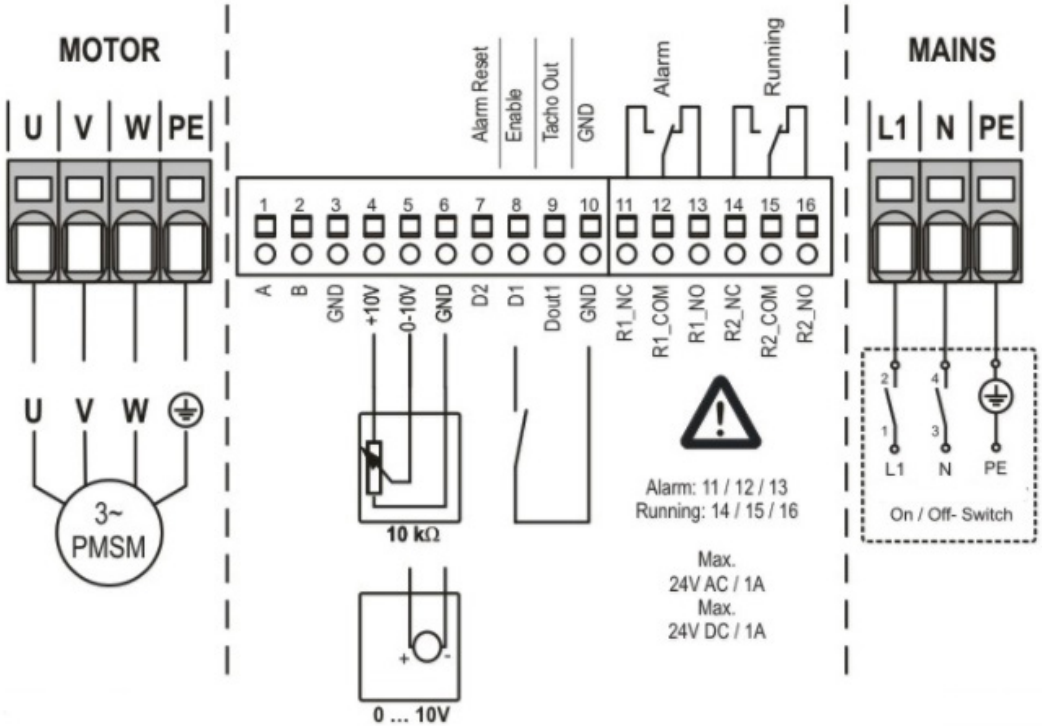

Selection tools and web resources, **guaranteed to make your job easier** – always available at flaktgroup.com

FläktGroup is committed to provide the best possible pre and post sales service. We are proud of our products and continously invest in our selection tools and sales support staff to make sure you can always get the best from them.

Always make www.flaktgroup.com your first port of call for up-to-date:

- **Product technical documentation**
- **Instruction manuals**
- **Certifications**
- **Sales and marketing leaflets**
- **And more...**

We also provide **BIM files** for many FläktGroup products as well as MagiCAD plugin.

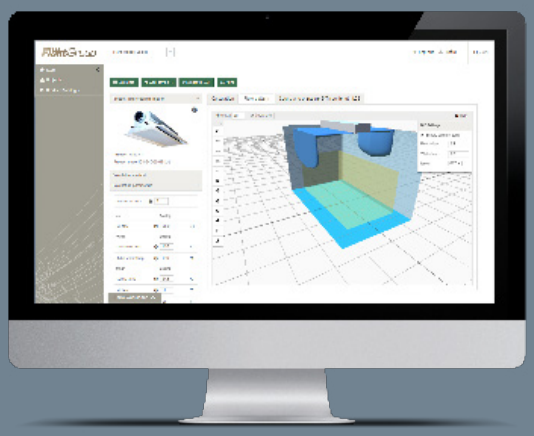

Selection tools at your service

We offer a number of advanced selection tools and apps, available directly for download from www.flaktgroup.com, that will help you make the correct product choice for every application and provide great guidance to your customers. Among the tools you will find are **ACON** for Air Treatment products, **SELECT** for Air Diffusion and **Fan Selector** for Air Movement products.

POWERBOX FANS
ePOWERBOX

PRODUCT FACTS

- Air flow up to 5.2 m^3/s
- Static pressures up to 1130 Pa
- Speed controllable external rotor motors
- Multiple outlet orientations
- All panels interchangeable to offer flexible outlet position

ELECTRICAL SUPPLY

220-240V/50Hz/1ϕ & 380-420V/50Hz/3ϕ

TEMPERATURE RANGE

Maximum temperature from +40°C to +70°C (depending on the model)

SIZES

355, 400, 450, 500, 560, 630 and 710 mm

CONSTRUCTION

The ePowerBox casing is made from galvanized sheet steel with PentaPost construction and acoustic insulation made from mineral wool with a thickness of 20 mm.

IMPELLER

The ePowerBox has a backward curved centrifugal impellers made of plastic with galvanised steel support plates for those up to 560 mm. Fans with a diameter of 630 mm and larger have high efficiency backward curved centrifugal impellers made of aluminium.

MOTOR

The impellers together with the external rotor motors are dynamically balanced to quality standard G2,5 DIN ISO 19410.

SPEED CONTROLLER

Speed is 100% infinitely variable using auto transformers or inverter control.

NB; Performance reduction in straight through configuration. Please refer to performance curve.

PRODUCT CODE

ePowerBox 50-355-3

- ePowerBox - Product Name
- 50 = Box Size ie, 50 = 500mm; 67 = 670mm; 80 = 800mm; 102 = 1020mm
- 355 = Spigot Diameter size (mm)
- 1 = 1ϕ or 3 = 3ϕ

ACCESSORIES (Pages 238-248) - CONTROLLERS (Pages 249-297)

The range of accessories include dampers, flexible connectors, service doors, outlet covers, guards, side covering and insulating connections. A quick reference guide is shown below.

SFC

SWR

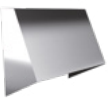

SOC

Controls Transformer

Mounting track/SMT

Controls Inverter

Controls Electronic

PERFORMANCE AND ELECTRICAL DATA

220-240V/50Hz/1ϕ & 380-420V/50HZ/3ϕ

PERFORMANCE TABLE

Product Code	m³/s @ Pa (Static)													
	0	50	100	150	200	250	300	350	400	450	500	550	600	650
ePowerBox 50-355-1	**1.3**	**1.24**	**1.17**	**1.11**	**1.04**	**0.97**	**0.87**	**0.75**	**0.58**	**0.18**				
ePowerBox 67-400-1	**0.91**	**0.86**	**0.79**	**0.73**	**0.66**	**0.57**	**0.45**	**0.18**						
ePowerBox 67-450-1	**1.91**	**1.84**	**1.77**	**1.69**	**1.61**	**1.53**	**1.44**	**1.33**	**1.21**	**1.08**	**0.91**	**0.6**	**0.13**	
ePowerBox 67-500-1	**2.61**	**2.52**	**2.43**	**2.34**	**2.24**	**2.15**	**2.05**	**1.94**	**1.83**	**1.7**	**1.55**	**1.39**	**1.16**	**0.86**

Product Code	m³/s @ Pa (Static)										
	0	100	200	300	400	500	600	700	800	900	1000
ePowerBox 50-355-3	**0.93**	**0.8**	**0.65**	**0.43**							
ePowerBox 67-400-3	**1.3**	**1.15**	**1.01**	**0.81**	**0.4**						
ePowerBox 67-450-3	**1.81**	**1.66**	**1.49**	**1.3**	**1.03**	**0.59**	**0.02**				
ePowerBox 67-500-3	**2.58**	**2.4**	**2.23**	**2.03**	**1.82**	**1.55**	**1.16**	**0.38**			
ePowerBox 80-560-3	**3.61**	**3.4**	**3.19**	**2.98**	**2.75**	**2.47**	**2.13**	**1.69**	**0.88**	**0.22**	
ePowerBox 80-630-3	**4.01**	**3.82**	**3.64**	**3.44**	**3.25**	**3.05**	**2.83**	**2.57**	**2.24**	**1.74**	**0.13**
ePowerBox 102-710-3	**4.82**	**4.47**	**4.07**	**3.63**	**3.14**	**2.59**	**0.99**				

PRODUCT AND ELECTRICAL DETAILS

Product Code	Product Number	Speed rpm	Motor Frame	Electrical Supply	Electrical Current			Wiring Diagrams	**Speed Controllers	Maximum Operating Temp°C	Breakout
					Motor (kW)	Full Load Current (A)	Starting Current (A)		Transformer		*Sound Level db(A) (3m)
ePowerBox 50-355-1	**BE355017**	**1325**	**Integral**	**220-240 V-50 Hz-1 Ph**	**0.28**	**1.35**	**4.46**	**CD3028**	**TEID 1.5**	**65**	**33**
ePowerBox 67-400-1	**BE400018**	**1360**	**Integral**	**220-240 V-50 Hz-1 Ph**	**0.51**	**2.45**	**7.11**	**CD3028**	**TEID 2.2**	**65**	**45**
ePowerBox 67-450-1	**BE450022**	**1270**	**Integral**	**220-240 V-50 Hz-1 Ph**	**0.85**	**4.1**	**15.58**	**CD3028**	**TEID 3.5**	**45**	**41**
ePowerBox 67-500-1	**BE500003**	**1310**	**Integral**	**220-240 V-50 Hz-1 Ph**	**1.38**	**6.22**	**19.90**	**CD3028**	**TEID 7.5**	**40**	**45**

Product Code	Product Number	Speed rpm	Motor Frame	Electrical Supply	Electrical Current			Wiring Diagrams	**Speed Controllers	Maximum Operating Temp°C	Breakout
					Motor (kW)	Full Load Current (A)	Starting Current (A)		Transformer		*Sound Level db(A) (3m)
ePowerBox 50-355-3	**BE355018**	**1355**	**Integral**	**380-420V-50 Hz-3 Ph**	**0.28**	**0.67**	**2.68**	**CD3030**	**IDDXF54 2.2**	**70**	**34**
ePowerBox 67-400-3	**BE400019**	**1335**	**Integral**	**380-420V-50 Hz-3 Ph**	**0.44**	**0.88**	**3.34**	**CD3030**	**IDDXF54 2.2**	**70**	**37**
ePowerBox 67-450-3	**BE450023**	**1345**	**Integral**	**380-420V-50 Hz-3 Ph**	**0.73**	**1.47**	**4.85**	**CD3030**	**IDDXF54 2.2**	**50**	**37**
ePowerBox 67-500-3	**BE500004**	**1380**	**Integral**	**380-420V-50 Hz-3 Ph**	**1.29**	**2.82**	**14.95**	**CD3030**	**IDDXF54 3.7**	**60**	**44**
ePowerBox 80-560-3	**BE560023**	**1350**	**Integral**	**380-420V-50 Hz-3 Ph**	**2.1**	**4.07**	**16.28**	**CD3030**	**IDDXF54 5.3**	**50**	**47**
ePowerBox 80-630-3	**BI101234**	**1380**	**Integral**	**380-420V-50 Hz-3 Ph**	**3.28**	**6.1**	**34.20**	**CD3030**	**IDDXF54 7.2**	**60**	**55**
ePowerBox 102-710-3	**BI101237**	**890**	**Integral**	**380-420V-50 Hz-3 Ph**	**2.17**	**4.79**	**19.16**	**CD3030**	**IDDXF54 5.3**	**70**	**49**

*Sound power levels are average dBA at 3 metres distance over sphere, under free field conditions and are presented for comparative purposes only. Values shown are those at the mid-point of the performance curve.

** For speed controllers, please see pages 250-297. For ErP efficiency ratings and grades please refer to our Fan Selector for more information.

Products in **bold** are available from our UK Distributors on next day delivery, if ordered by 4pm. Please call to confirm availability on 01206 222 580.

DRAWING AND DIMENSIONS

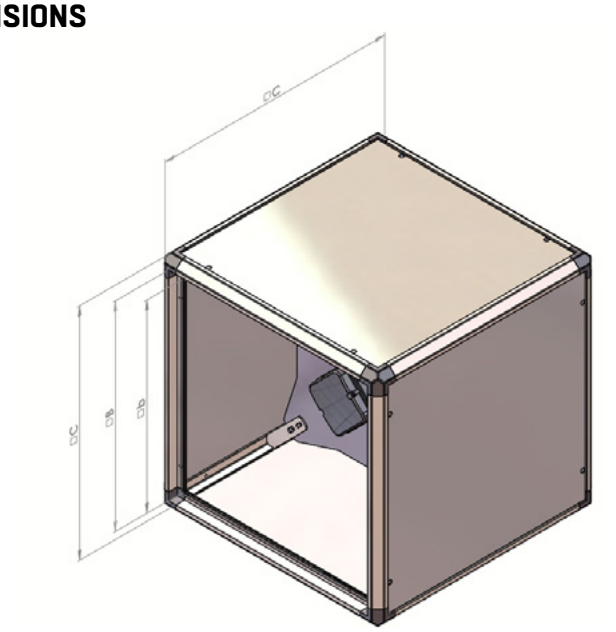

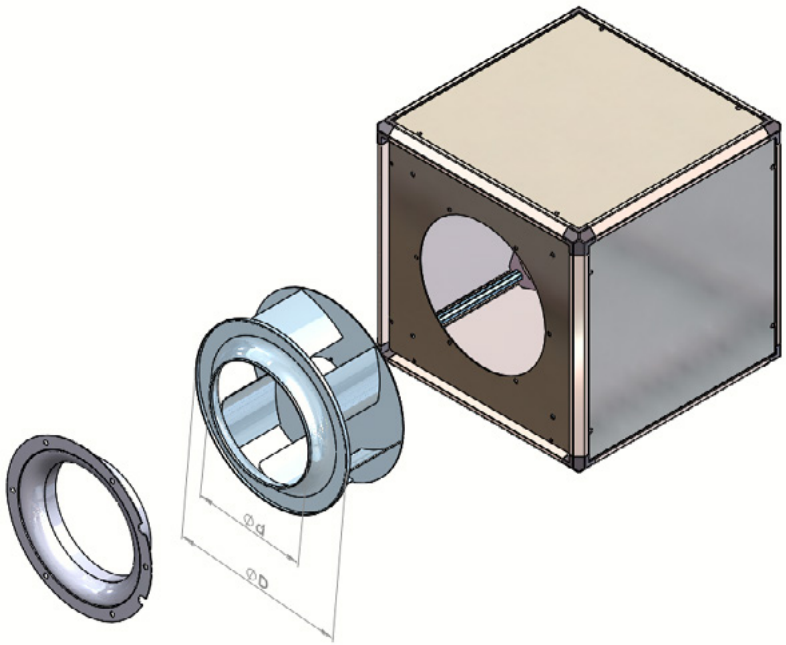

Product Code	A	B	b	C	Ø D	Ø d	Weight max (kg)
ePowerBox 50-355	500	450	420	500	365	224	33
ePowerBox 67-400	670	620	590	670	404	253	49
ePowerBox 67-450	670	620	590	670	454	286	58
ePowerBox 67-500	670	620	590	670	504	321	66
ePowerBox 80-560	800	720	690	800	570	361	95
ePowerBox 80-630	800	720	690	800	634	407	105
ePowerBox 102-710	1020	940	910	1020	718	438	157

All dimensions shown in mm

Products in **bold** are available from our UK Distributors on next day delivery, if ordered by 4pm. Please call to confirm availability on 01206 222 580.

PERFORMANCE CHARTS

ePOWERBOX 50-355-1 - BE355017

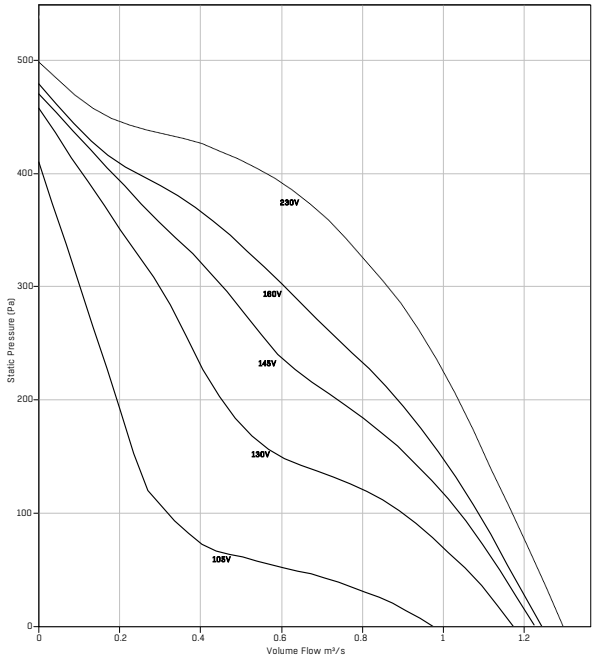

ePOWERBOX 67-400-1 - BE400018

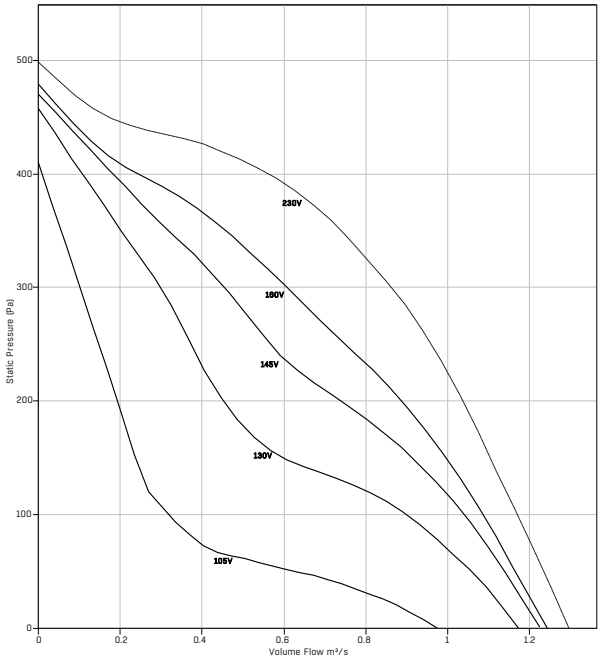

ePOWERBOX 67-450-1 BE450022

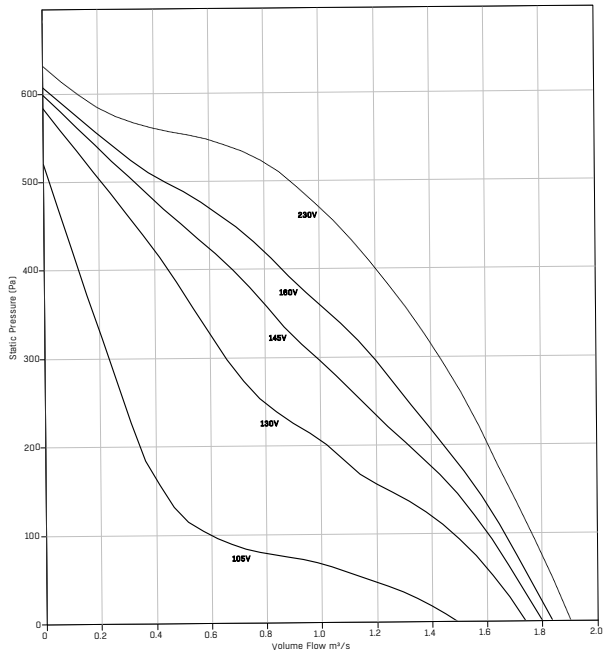

Please note : -

The performances shown are based on the centrifugal 90 degrees discharge, for the axial flow performance please contact our sales team.

PERFORMANCE CHARTS

ePOWERBOX 67-500-1 - BE500003

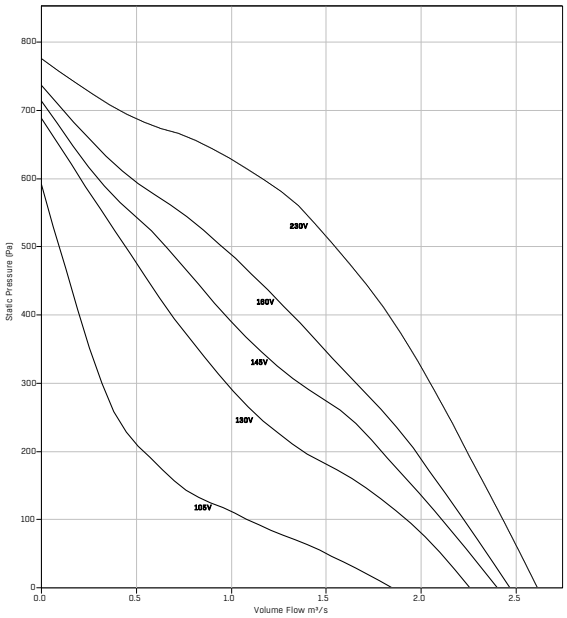

ePOWERBOX 50-355-3 - BE355018

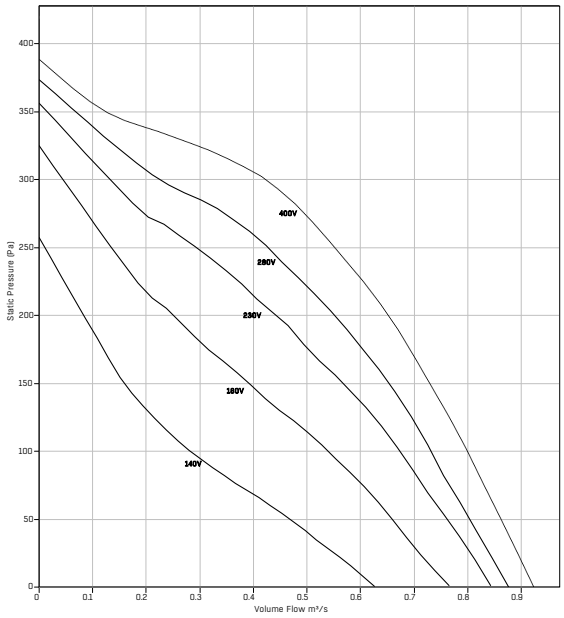

ePOWERBOX 67-400-3 - BE400019

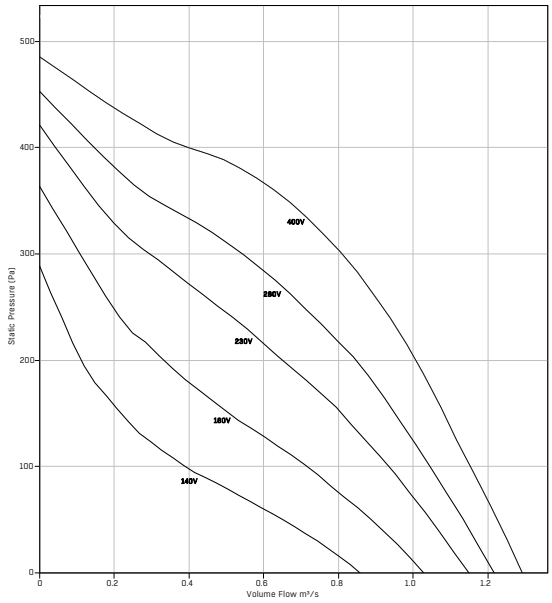

Please note : -

The performances shown are based on the centrifugal 90 degrees discharge, for the axial flow performance please contact our sales team.

PERFORMANCE CHARTS

ePOWERBOX 67-450-3 - BE450019

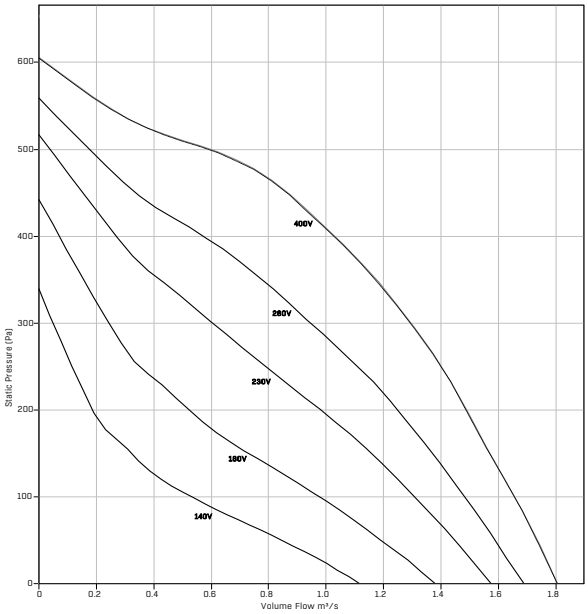

ePOWERBOX 67-500-3 - BE500004

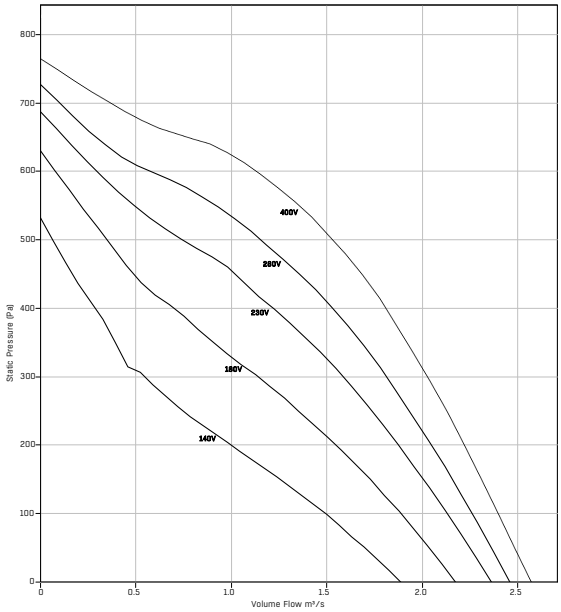

ePOWERBOX 67-560-3 - BE560023

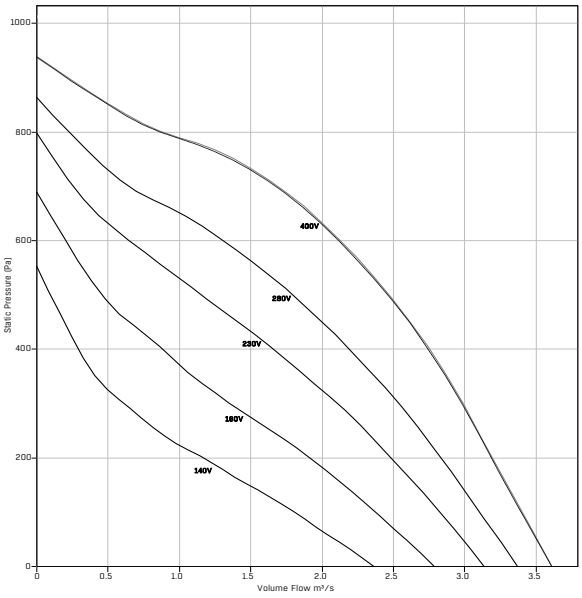

Please note : -

The performances shown are based on the centrifugal 90 degrees discharge, for the axial flow performance please contact our sales team.

PERFORMANCE CHARTS

ePOWERBOX 80-630-3 - BI101234

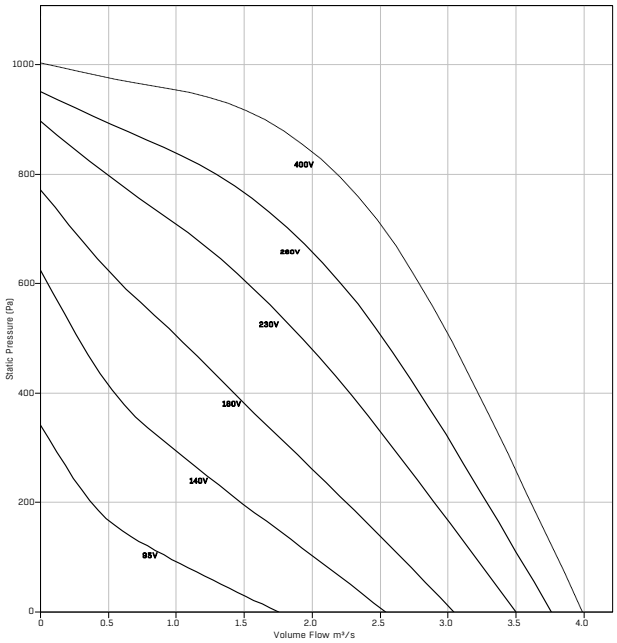

Please note : -

The performances shown are based on the centrifugal 90 degrees discharge, for the axial flow performance please contact our sales team.

ePOWERBOX 102-710-3 - BI101237

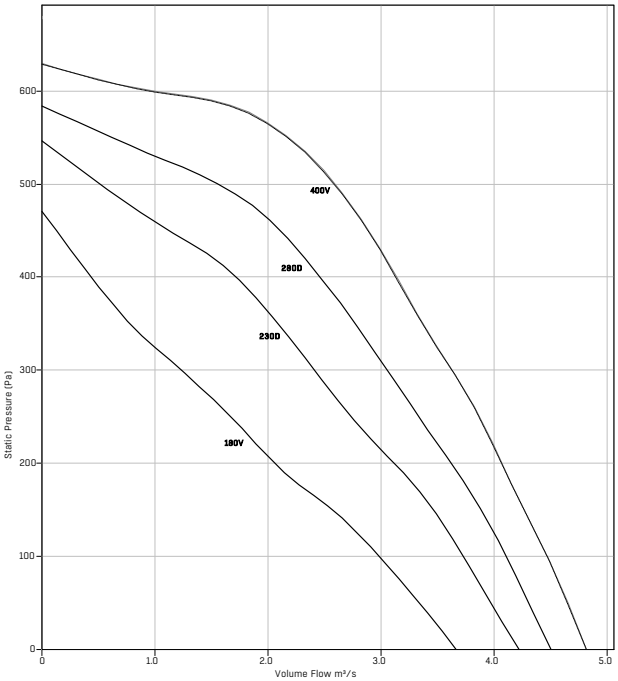

INSTALLATION GUIDE

Outdoor installation PowerBox Estoc
Axial air flow (90° discharge available)

All accessories supplied separately

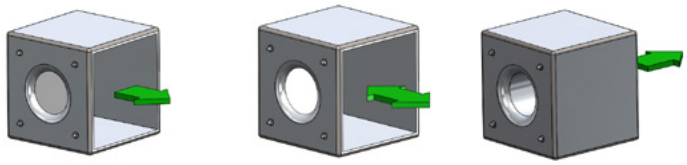

Centrifugal Discharge | Centrifugal on both sides - free discharge | Axial Discharge

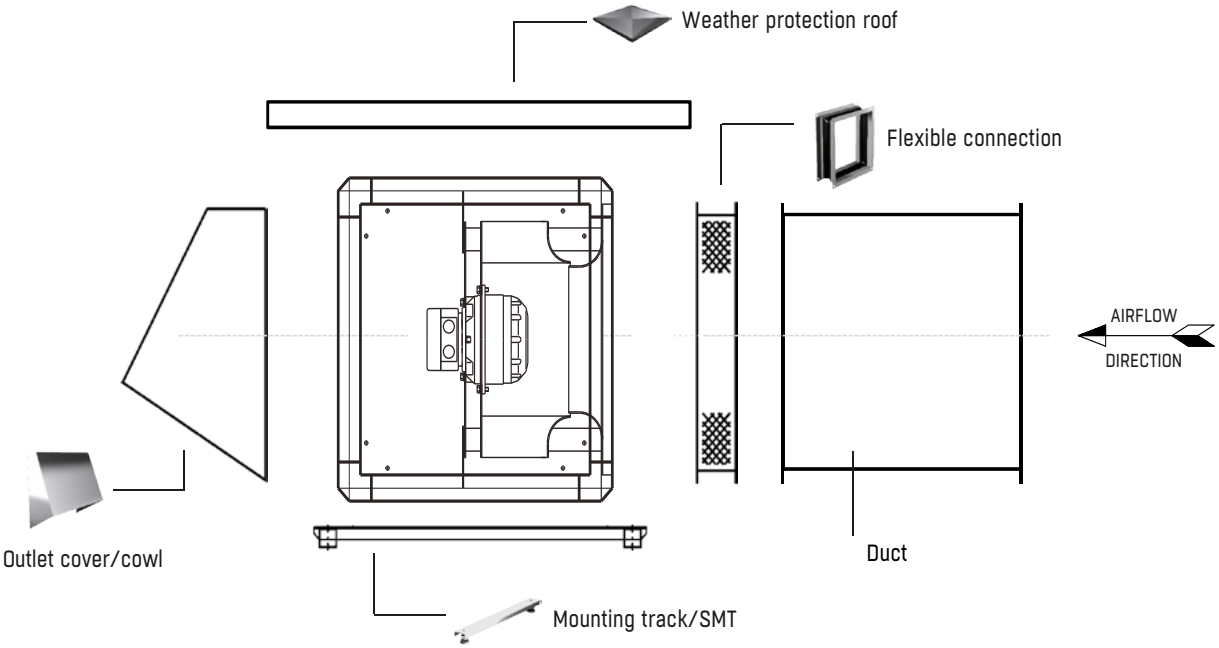

WIRING DIAGRAMS - ESTOC

CD3028

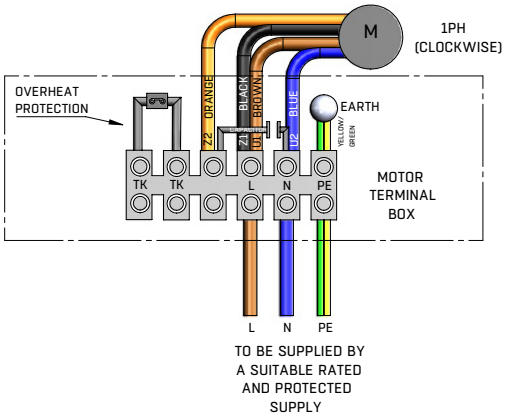

FACTORY CONFIGURATION
(CLOCKWISE ROTATION)

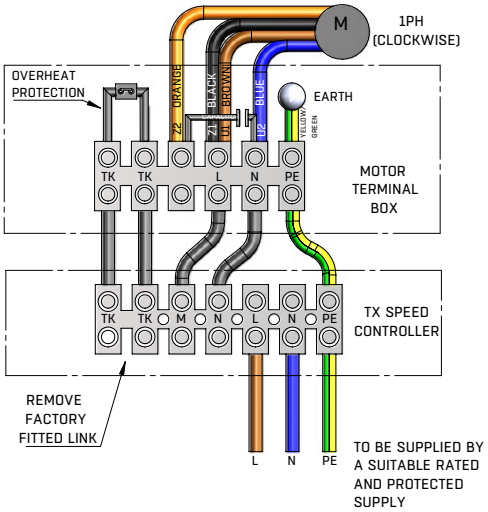

CD3030

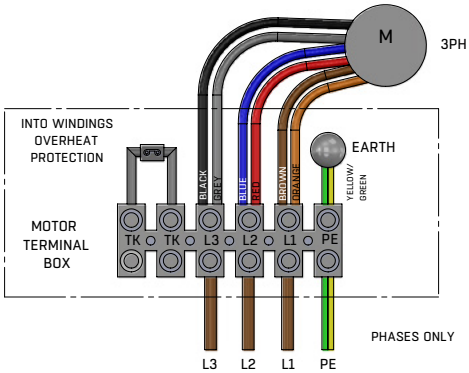

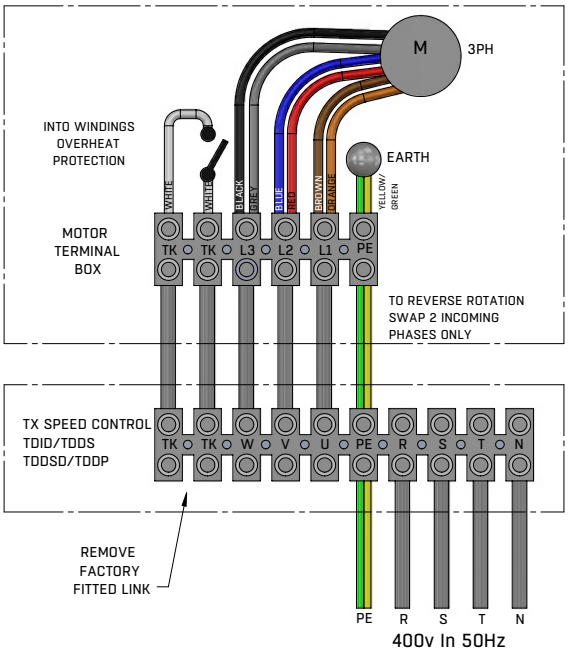

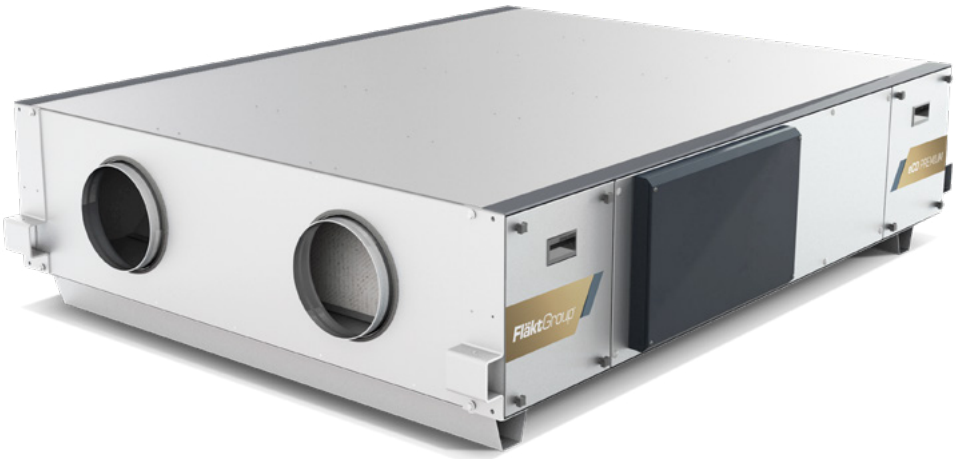

AVAILABLE IN **6 SIZES** 0.1–0.8 m³/s

LOW ENERGY CONSUMPTION >90% Wet 85% Dry recovery

VERY LOW NOISE LEVELS <20 dBA at 3 m*

*without a battery work bulkhead in standard classroom

eCO PREMIUM™

ENERGY RECOVERY UNIT DESIGNED TO PROVIDE PERFECT COMFORT

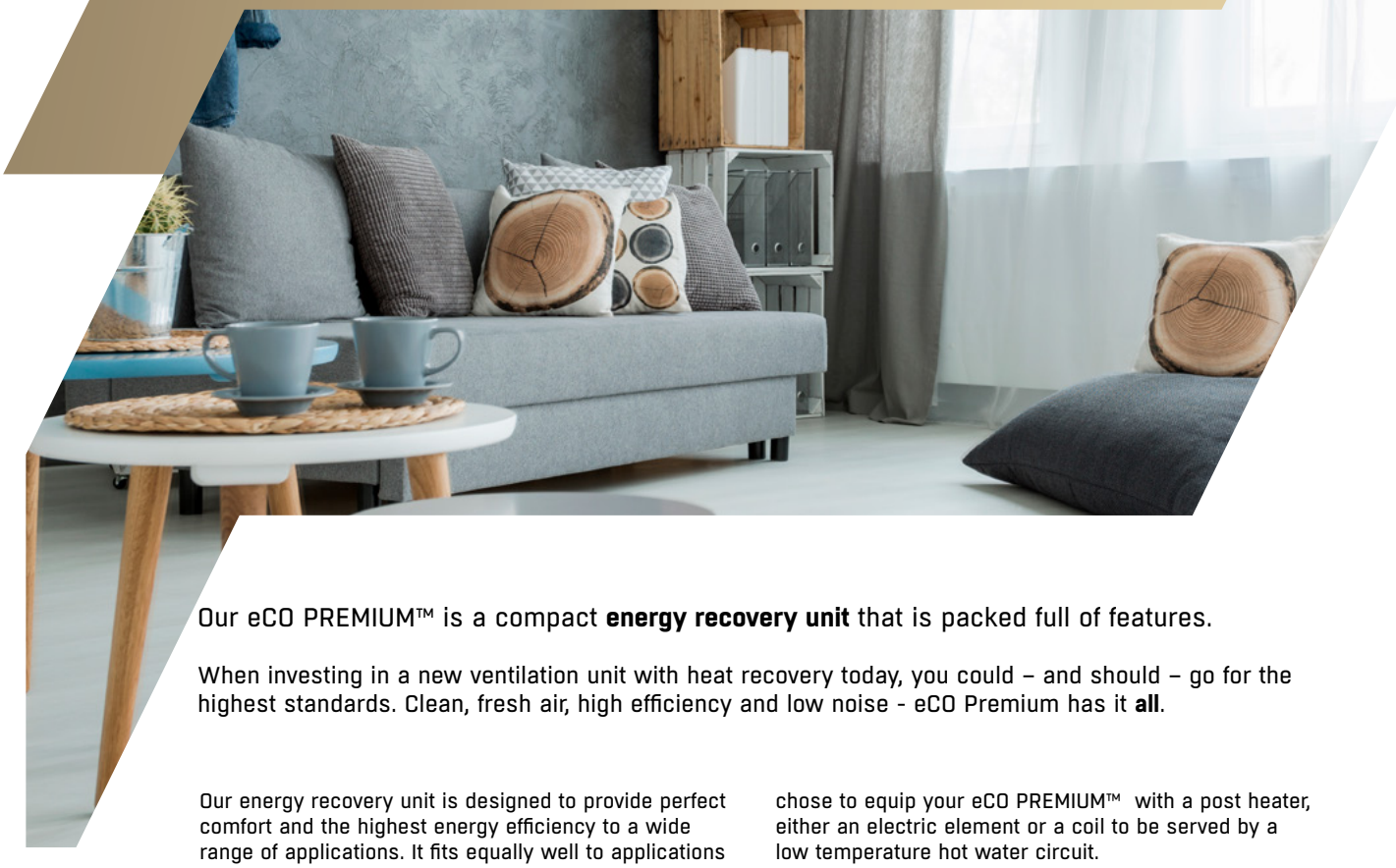

Our eCO PREMIUM™ is a compact **energy recovery unit** that is packed full of features.

When investing in a new ventilation unit with heat recovery today, you could – and should – go for the highest standards. Clean, fresh air, high efficiency and low noise - eCO Premium has it **all**.

Our energy recovery unit is designed to provide perfect comfort and the highest energy efficiency to a wide range of applications. It fits equally well to applications such as classrooms, gyms, offices, shops or hotels.

Our versatile unit is available in 6 different sizes and air flow capacities range from 0.2–0.9 m³/s. You can chose to equip your eCO PREMIUM™ with a post heater, either an electric element or a coil to be served by a low temperature hot water circuit.

Electric pre-heaters are also available depending on your application requirements. Our eCO Premium, a perfect solution for your ventilation needs.

A COMFORTABLE & HEALTHY INDOOR ENVIRONMENT

BB93 BB101

Commercial buildings · Sports stadiums · Retail · Health care · Hotels · Schools

CURO CONTROL PRE-CONNECTED

VAV – Touch
CAV – Touch
COP – Touch
VAV – Touch + CO_2 AIR Quality

POWERBOX FANS
ESTOC EC

PRODUCT FACTS

- Air flow up to 5.4 m^3/s
- Static pressures up to 840 Pa
- Controllable EC motors
- Multiple outlet orientations

ELECTRICAL SUPPLY

220-240V/50Hz/1ϕ & 380-420V/50Hz/3ϕ

TEMPERATURE RANGE

Maximum temperature up to +55°C (depending on the model)

SIZES

315, 355, 400, 450, 500, 560, 630 & 710 mm

CONSTRUCTION

The Estoc EC casing is galvanized and made from sheet steel with PentaPost construction and acoustic insulation made from fibre glass with a thickness of 20 mm.

IMPELLER

The Estoc EC has a backward curved centrifugal impellers made of plastic with galvanised steel support plates for those up to 450 mm. Fans with a diameter of 500 mm and larger have high efficiency backward curved centrifugal impellers made of aluminium.

MOTOR

The impellers together with the EC (electronically controlled) external rotor motors are dynamically balanced to quality standard G2,5 DIN ISO 19410.

SPEED CONTROLLER

Speed is variable using a 0-10 volt potentiometer.

PRODUCT CODE

ESTOC EC 50-355-3

- ESTOC EC - Product Name
- 50 = Box Size ie, 50 = 500mm; 67 = 670mm; 80 = 800mm; 102 = 1020mm
- 355 = Spigot Diameter size (mm)
- 1 = 1ϕ or 3 = 3ϕ

ACCESSORIES (Pages 238-248) - CONTROLLERS (Pages 249-297)

The range of accessories include dampers, flexible connectors, service doors, outlet covers, guards, side covering and insulating connections. A quick reference guide is shown below.

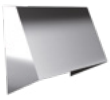

SOC

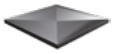

SWR

iFan

SFC

Mounting track/SMT

0-10v Potentiometer

PERFORMANCE & ELECTRICAL DATA

220-240V/50Hz/1ϕ & 380-420V/50HZ/3

PERFORMANCE TABLE

Product Code	m³/s @ Pa (Static)												
	0	50	100	150	200	250	300	350	400	450	500	550	600
ESTOC EC 50-315-1	0.73	0.69	0.64	0.59	0.52	0.42							
ESTOC EC 50-355-1	0.96	0.91	0.87	0.82	0.77	0.69	0.6	0.49					
ESTOC EC 67-400-1	1.12	1.07	1.01	0.94	0.84	0.71	0.51						
ESTOC EC 67-450-1	1.79	1.74	1.69	1.63	1.58	1.51	1.45	1.37	1.28	1.18	1.05	0.86	0.02

Product Code	m³/s @ Pa (Static)																	
	0	50	100	150	200	250	300	350	400	450	500	550	600	650	700	750	800	850
ESTOC EC 80-500-3	2.92	2.84	2.77	2.7	2.62	2.55	2.47	2.39	2.3	2.21	2.12	2.01	1.89	1.74	1.55	1.24		
ESTOC EC 80-560-3	3.71	3.63	3.56	3.48	3.4	3.32	3.23	3.14	3.05	2.96	2.85	2.74	2.62	2.48	2.33	2.14	1.89	1.37
ESTOC EC 102-630-3	4.17	4.05	3.93	3.8	3.68	3.55	3.42	3.28	3.14	2.97	2.79	2.55	2.21	1.52				
ESTOC EC 102-710-3	5.45	5.28	5.11	4.93	4.75	4.56	4.36	4.15	3.91	3.64	3.31	2.85	2.03					

PRODUCT AND ELECTRICAL DETAILS

Product Code	Product Number	Speed rpm	Motor Frame	Electrical Supply	Electrical Current			Wiring Diagrams	**Speed Controllers	Maximum Operating Temp°C	Breakout
					Motor (kW)	Full Load Current (A)	Starting Current (A)		Potentio-meter		*Sound Level db(A) (3m)
ESTOC EC 50-315-1	UB503159	1500	Integral	220-240 V/50 Hz/1 Ph	0.2	1.3	1.3	CD3011	0-10 V Pot	55	32
ESTOC EC 50-355-1	UB503559	1500	Integral	220-240 V/50 Hz/1 Ph	0.35	2.1	2.1	CD3011	0-10 V Pot	50	37
ESTOC EC 67-400-1	UB674059	1500	Integral	220-240 V/50 Hz/1 Ph	0.62	3.7	3.7	CD3011	0-10 V Pot	50	43
ESTOC EC 67-450-1	UB674559	1450	Integral	220-240 V/50 Hz/1 Ph	1	5.7	5.7	CD3011	0-10 V Pot	50	47

Product Code	Product Number	Speed rpm	Motor Frame	Electrical Supply	Electrical Current			Wiring Diagrams	**Speed Controllers	Maximum Operating Temp°C	Breakout
					Motor (kW)	Full Load Current (A)	Starting Current (A)		Potentio-meter		*Sound Level db(A) (3m)
ESTOC EC 80-500-3	UB805069	1500	Integral	380-420 V/50 Hz/3 Ph	1.9	3	3	CD3012	0-10 V Pot	50	50
ESTOC EC 80-560-3	UB805669	1400	Integral	380-420 V/50 Hz/3 Ph	2.8	4.3	4.3	CD3012	0-10 V Pot	50	50
ESTOC EC 102-630-3	UB106369	1100	Integral	380-420 V/50 Hz/3 Ph	2.3	3.7	3.7	CD3012	0-10 V Pot	50	43
ESTOC EC 102-710-3	UB107169	940	Integral	380-420 V/50 Hz/3 Ph	2.7	4.1	4.1	CD3012	0-10 V Pot	50	54

*Sound power levels are average dBA at 3 metres distance over sphere, under free field conditions and are presented for comparative purposes only. Values shown are those at the mid-point of the performance curve. ** For speed controllers, please see pages 219-267. For ErP efficiency ratings and grades please refer to our Fan Selector for more information.

DRAWING AND DIMENSIONS

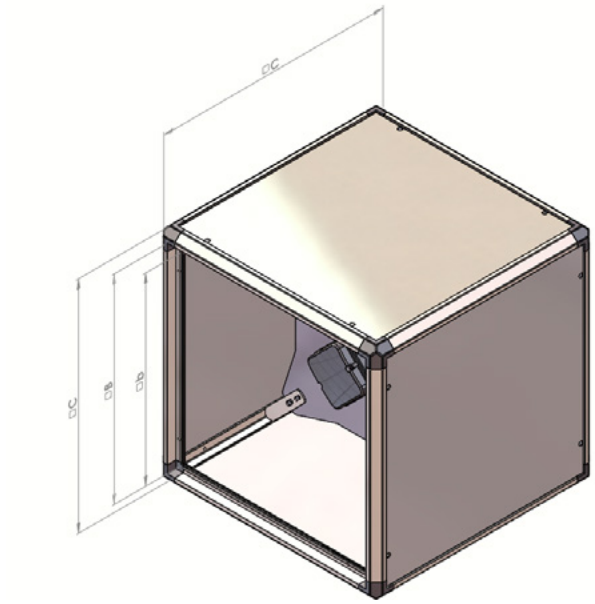

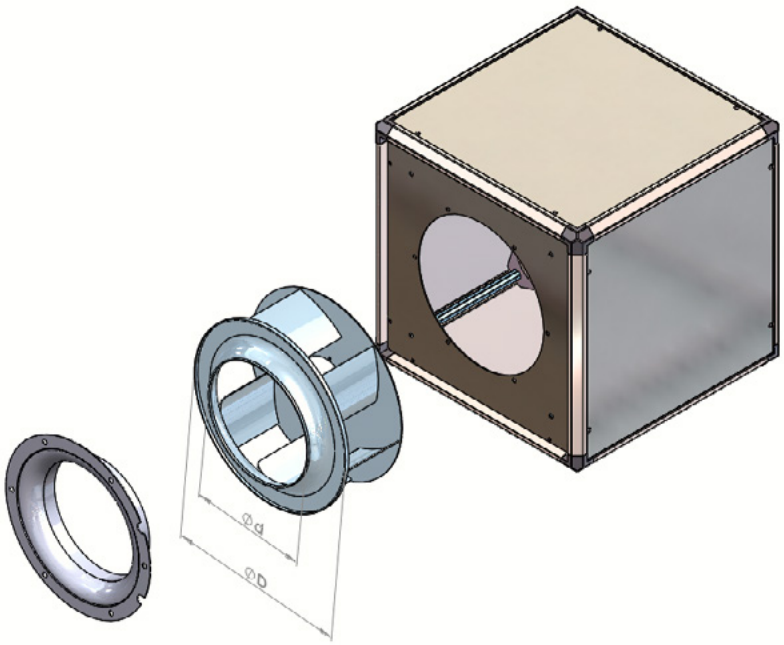

Product Code	A	B	b	C	Ø D	Ø d	Max Weight Kg
ESTOC EC 50-315	500	450	420	500	319	203	31
ESTOC EC 50-355	500	450	420	500	359	228	36
ESTOC EC 67-400	670	620	590	670	404	257	47
ESTOC EC 67-450	670	620	590	670	454	289	53
ESTOC EC 80-500	800	720	690	800	510	325	84
ESTOC EC 80-560	800	720	690	800	570	362	86
ESTOC EC 102-630	1020	940	910	1020	640	410	94
ESTOC EC 102-710	1020	940	910	1020	718	460	100

PERFORMANCE CHARTS

ESTOC EC 50-315-1 - UB503159

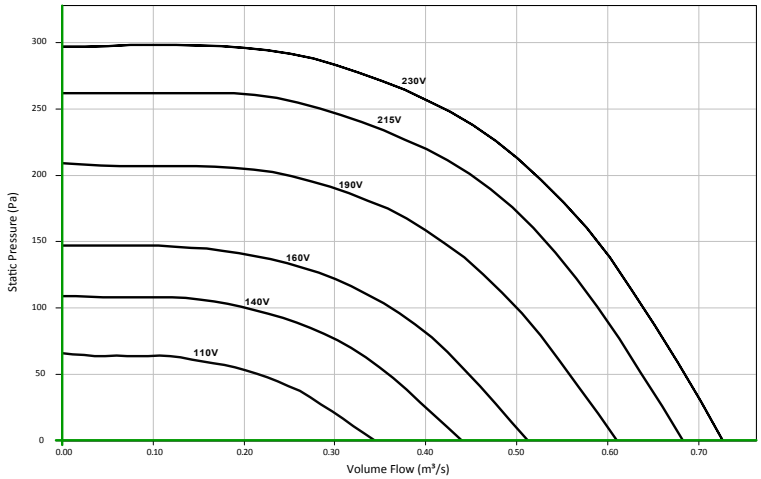

ESTOC EC 50-355-1 - UB503559

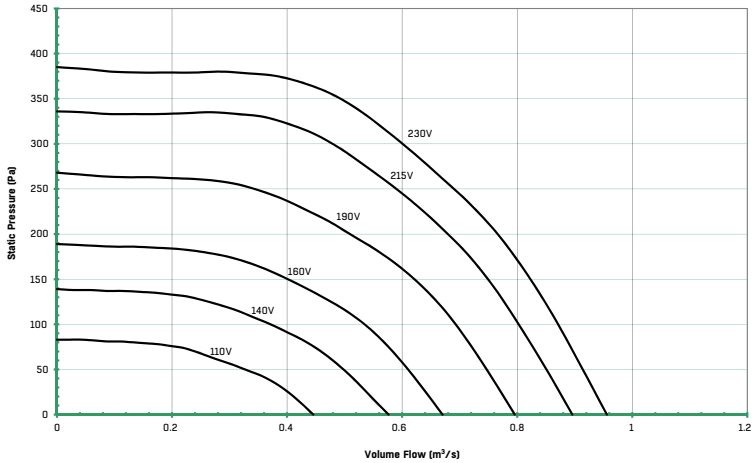

Please note : -

The performances shown are based on the centrifugal 90 degrees discharge, for the axial flow performance please contact our sales team.

ESTOC EC 67-400-1 - UB674059

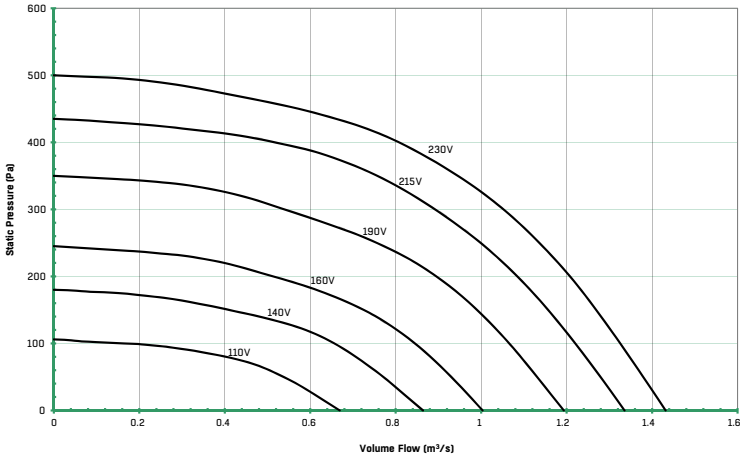

PERFORMANCE CHARTS

ESTOC EC 67-450-1 - UB674559

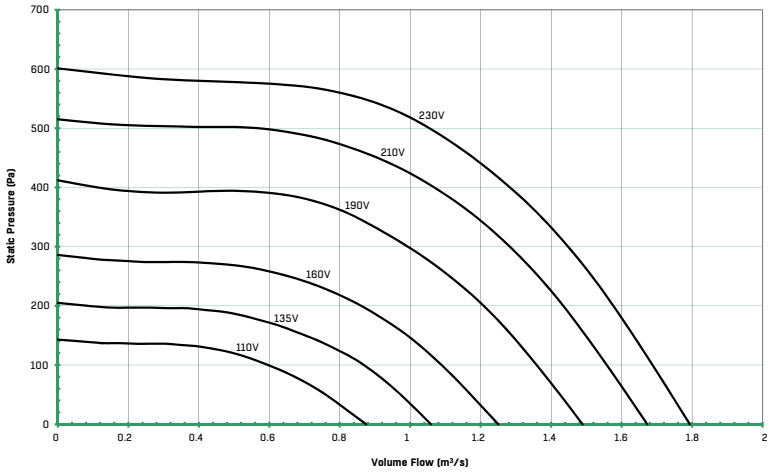

ESTOC EC 80-500-3 - UB805069

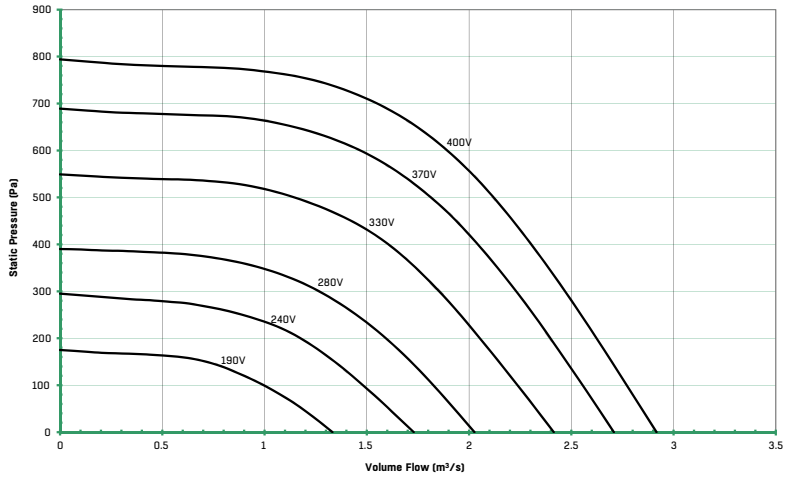

Please note : -

The performances shown are based on the centrifugal 90 degrees discharge, for the axial flow performance please contact our sales team.

ESTOC EC 80-560-3 - UB805669

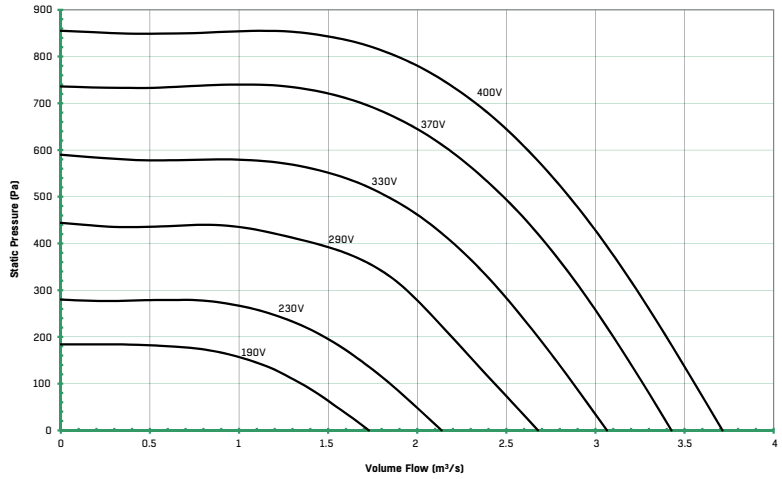

PERFORMANCE CHARTS

ESTOC EC 102-630-3 - UB106369

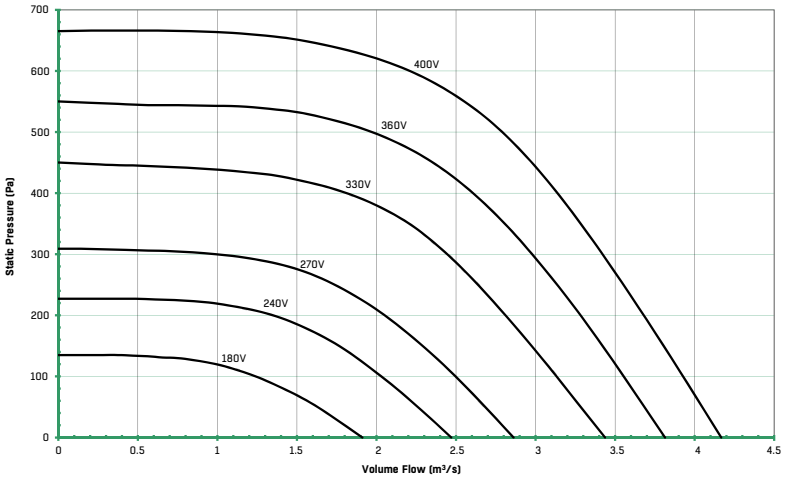

ESTOC EC 102-710-3 - UB107169

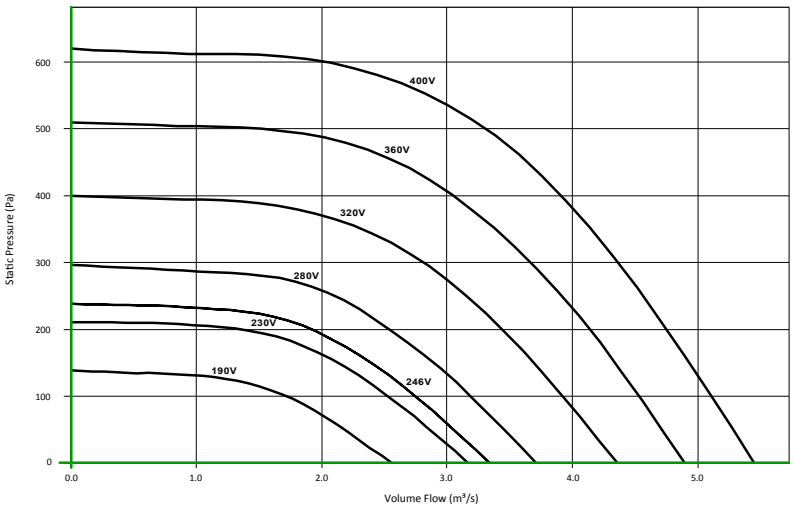

Please note : -

The performances shown are based on the centrifugal 90 degrees discharge, for the axial flow performance please contact our sales team.

INSTALLATION GUIDE

Outdoor installation PowerBox Estoc
Axial air flow (90° discharge available)

All accessories supplied separately

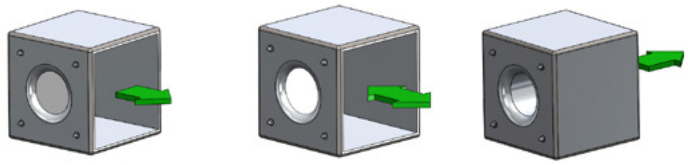

Centrifugal Discharge | Centrifugal on both sides - free discharge | Axial Discharge

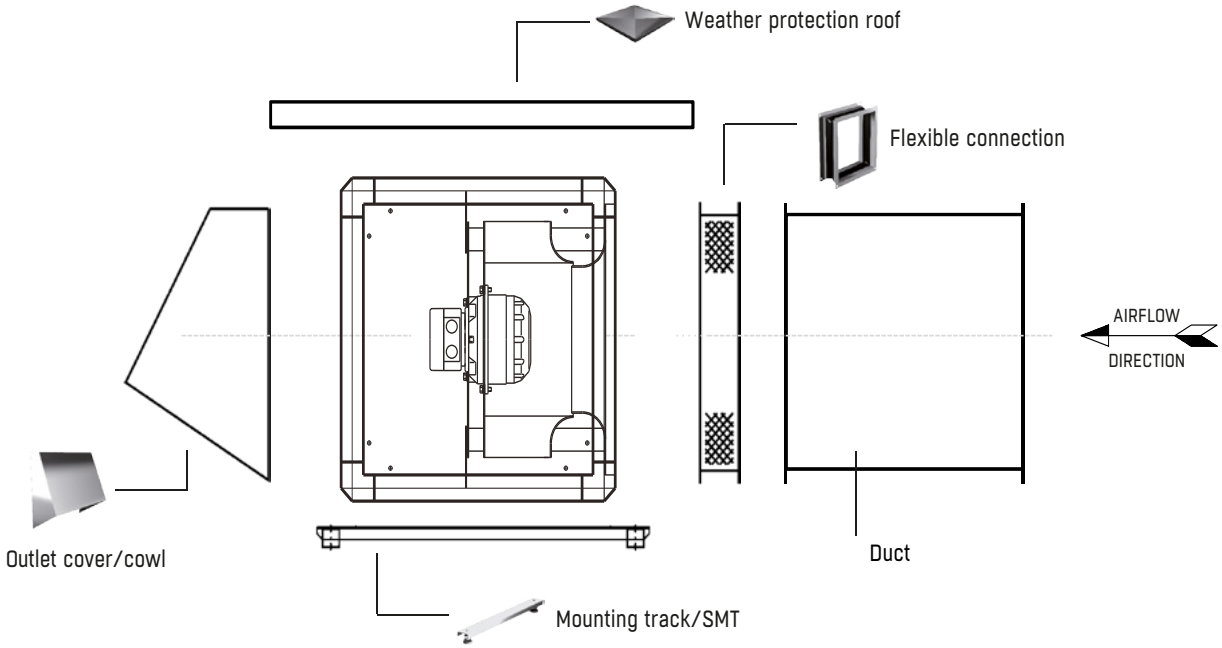

WIRING DIAGRAMS - ESTOC EC

CD3011

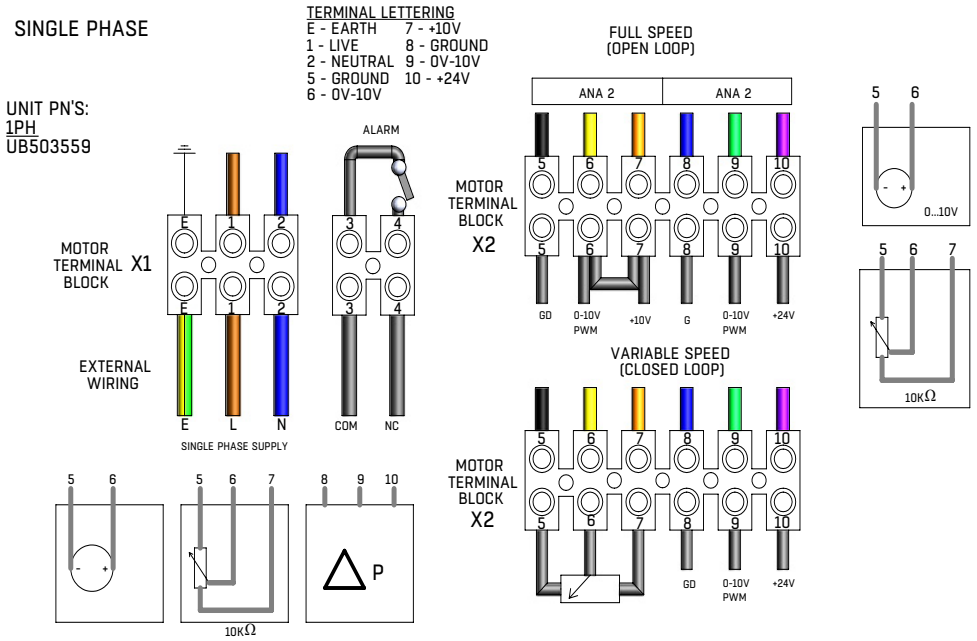

CD3012

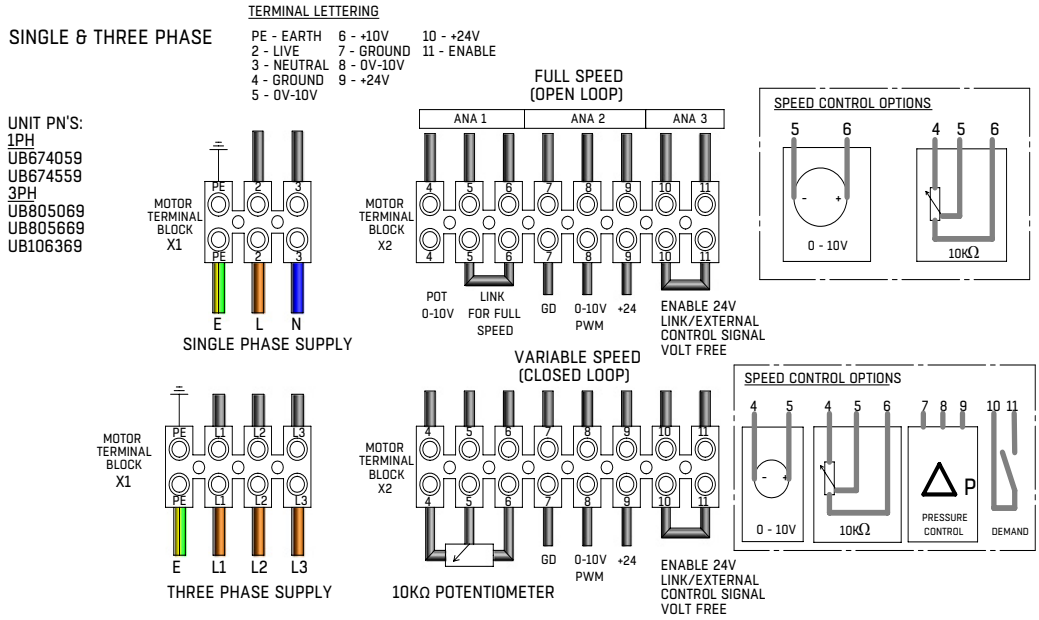

HEAT RECOVERY UNIT
eCO PREMIUM

PRODUCT FACTS

- 6 standard sizes
- Air flow up to 0.9 m^3/s
- Static pressures up to 350Pa
- F7 supply filters
- Low noise
- Casing leakage L2 as standard
- Fully integrated EC control
- Counterflow heat exchanger with efficiencies up to 90%
- 100% bypass with free night time cooling
- ErP, Eurovent and SFPint compliant

ELECTRICAL SUPPLY

220-240V/50Hz/3ph & 380-420V/50Hz/3ph - dependent on unit size and integral heaters

TEMPERATURE RANGE

Maximum temperature from -20°C to +40°C (depending on the model)

SIZES

1, 2, 3, 4, 5, 6 - sizes 1-4 available with acoustic casing

FEATURES

eCO PREMIUM is a compact unit in six sizes that require minimal space and cover a flow range up to 0.9 m^3/s. Compact dimensions and low noise data provides great flexibility in the placement of the unit. The unit is supplied with direct drive on both supply and exhaust fans, compact supply and extract air filters and a counterflow heat exchanger.

FILTERS

Filter for supply and extract air are made of compact fiberglass optimized for low pressure drop. G4 or F7 class is available on the supply air and G4 or M5 on the extract air. The filters are pressed against the runners inside the casing for tightness and easy fitting/removal.

CASING

The unit is made of self-supporting double skin galvanized sheet steel, insulated with 25 mm mineral wool (35 kg/m3). All panels have plastic handles integrated in the outer panel. The filter panel (service side) has screws with plastic head for easy access (by hand) where other panels has fasteners that requires screwdriver. The unit is supplied on a stable base which can be fitted with feet.

- Corrosivity class C3 (BSK 94/99 and ISO 12944-2)
- Leakage class L2 (EN 1886)

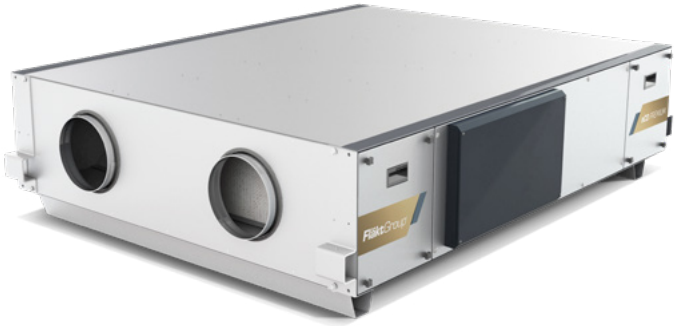

PRODUCT CODE

REDA-a-b-cc-d-e-ff

- a = Size — Size 1,2,3,4,5,6
- b = Inspection side — 1 - Right, 2 - Left, 3 - Left 'Acoustic' casing
  4 - Right 'Acoustic' casing
- cc = Unit variants — 00 - Essential, 01 Enhanced electrical,
  02 - Enhanced hot water, 03 -Elite Electrical,
  04 - Elite hot water
- d = Filter (supply/exhaust) — 1 - G4 compact / G4 compact
  2 - F7 compact / m5 compact
- e = Fan control speed — 1 - Variably Air Volume, VAV
  2 - Constant Pressure, COP
  3 - Constant Air Volume, CAV
  4 - VAV+co2 function (int. as standard)
- ff = Language — 03 - English

ACCESSORIES (Pages 130-133)

The range of accessories as a quick reference guide is shown below.


Shut Off Damper With Acuator


Duct Mounted Cooling Coil


Standard Silencer


Weather Cover Roof


Duct Mounted Pre Heater

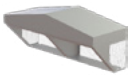
Weather Cowl Kit


Curo Control included as standard


Mounting Feet

DRAWING AND DIMENSIONS

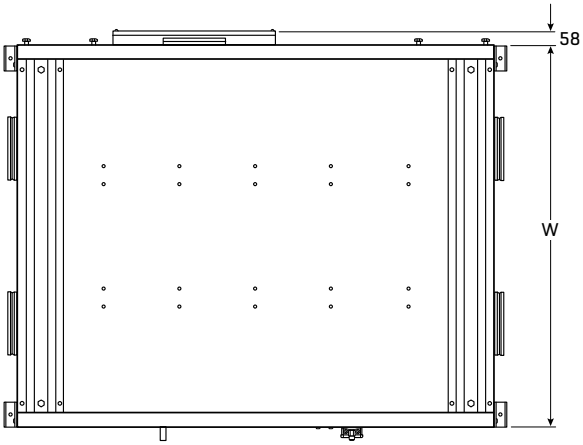

MINIMUM MAINTENANCE SPACE

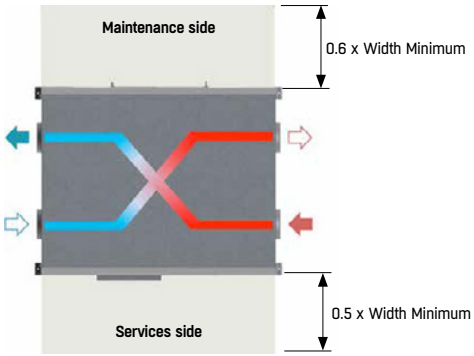

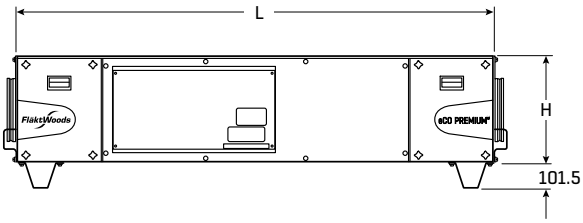

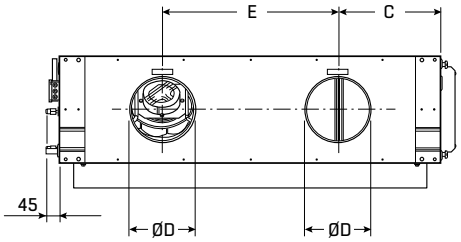

Unit Size	L	W	H	C	Ø D	E	W1	W2
1	1600	1220	380	335	250	550	188	217
2	1600	1220	380	335	250	550	200	218
3	1900	1520	425	410	250	700	263	294
4	1900	1520	425	410	250	700	269	300
5	2000	1720	470	460	315	800	290	-
6	2480	1720	685	460	500	800	495	-

All dimensions in mm. All weights in kg.

W1 - Weight for Essential model, Standard
W2 - Weight for Essential model, Acoustic

PERFORMANCE CHARTS

SIZE 1

SUPPLY AIR FAN

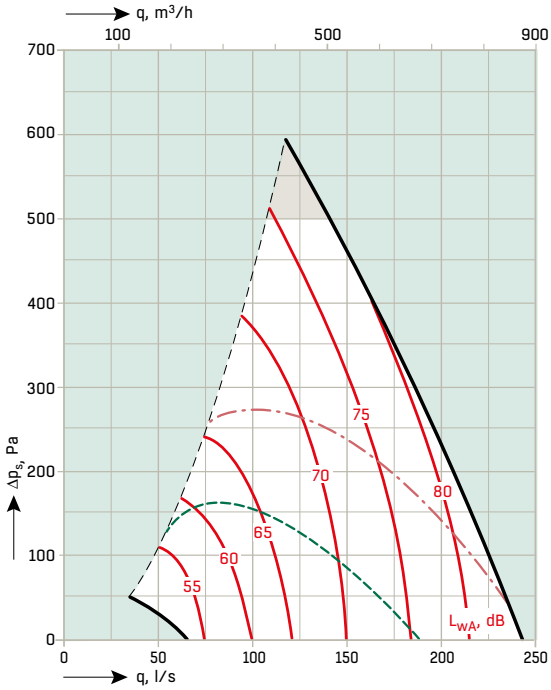

SFPv 0.75 SFPv [W/(l/s)][1)] SFPv 0.50 SFPv [W/(l/s)][1)]

[1)] Essential and Acoustic model with G4 filter

EXTRACT AIR FAN

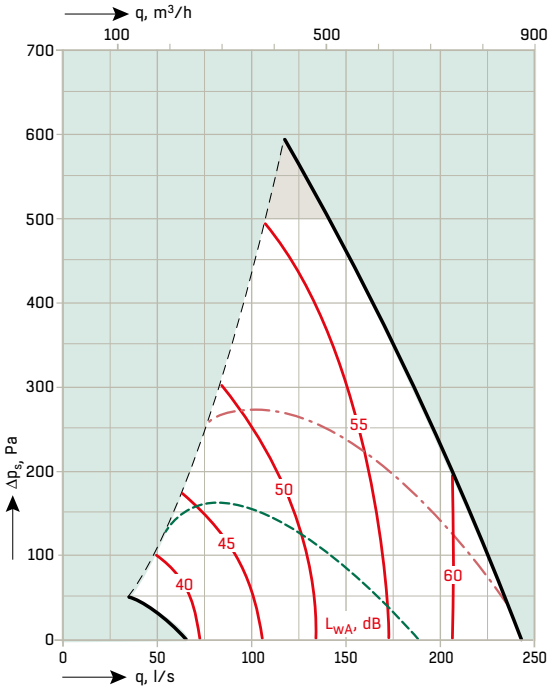

SFPv 0.75 SFPv [W/(l/s)][1)] SFPv 0.50 SFPv [W/(l/s)][1)]

[1)] Essential and Acoustic model with G4 filter

SYSTEM OVERVIEW

The diagrams show the available external pressure for the duct system. The weighted sound power noise levels given in dB(A) apply to ducts on the supply fan's outlet side (diagram 1) and extract fans' inlet side (diagram 2). The SFP_v values for each fan are calculated according to clean filters. SFPv is calculated for the complete unit and includes power to both supply and extract fan divided by either the supply or extract volume whichever is the greater.

ELECTRICAL DATA

External fuse: Recommended 10 A.
The mains supply cable must be fitted with an external safety switch, which can cut the current to the entire unit.
Ambient temperature during operation –20° - +40°C

Unit Version	Fan Motors Power, 2 fans kW	Post Heater kW	Rated Power kW	Rated Current A	Electrical Supply V/Ph/Hz
Essential Enhanced HW Elite HW	0.338	–	0.358	2.8	230/1/50
Enhanced HE Elite HE	0.338	1.0	1.358	7.1	230/1/50

TEMPERATURE EFFICIENCY

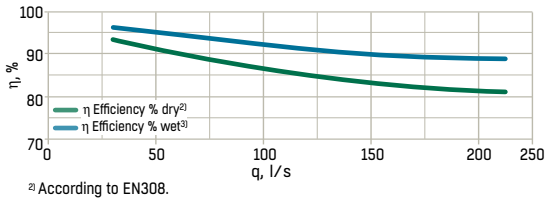

[2)] According to EN308.
[3)] –5° C/RH 90% Outdoor and +22° C/RH 50% Extract.

FILTER

Supply air: 550 x 307 x 48 mm, G4 alt F7
Extract air: 550 x 307 x 48 mm, G4 alt M5

PERFORMANCE CHARTS

SIZE 2

SUPPLY AIR FAN

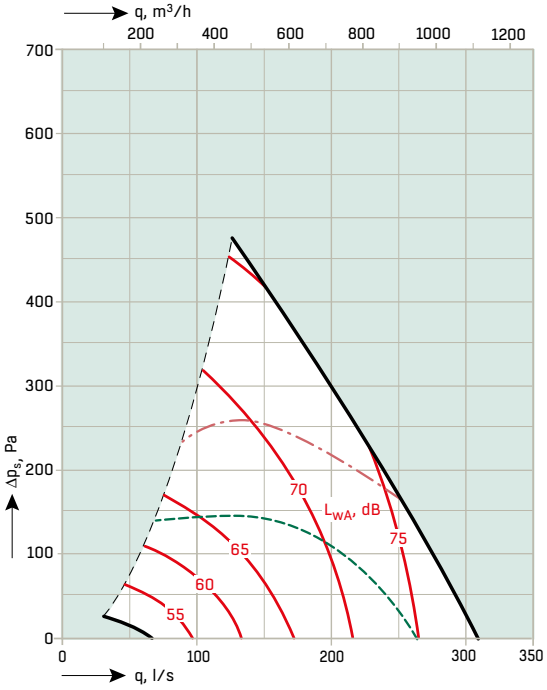

SFPv 0.75 SFPv [W/(l/s)][1] SFPv 0.50 SFPv [W/(l/s)][1]

[1] Essential and Acoustic model with G4 filter

EXTRACT AIR FAN

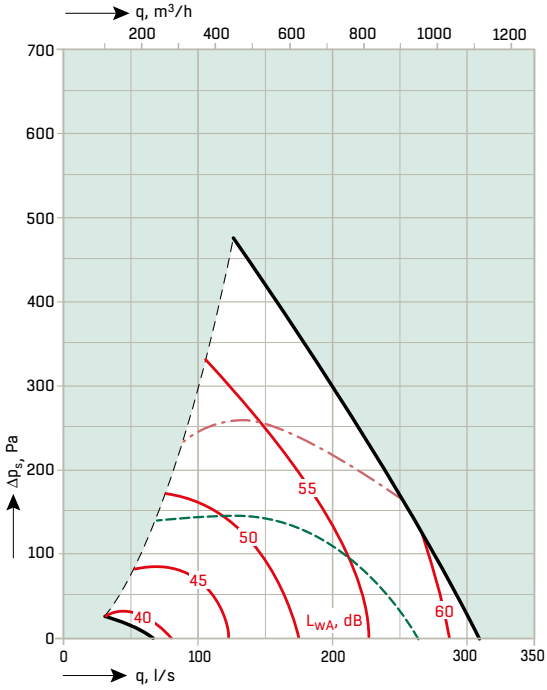

SFPv 0.75 SFPv [W/(l/s)][1] SFPv 0.50 SFPv [W/(l/s)][1]

[1] Essential and Acoustic model with G4 filter

SYSTEM OVERVIEW

The diagrams show the available external pressure for the duct system. The weighted sound power noise levels given in dB(A) apply to ducts on the supply fan's outlet side (diagram 1) and extract fans' inlet side (diagram 2). The SFP_v values for each fan are calculated according to clean filters. SFPv is calculated for the complete unit and includes power to both supply and extract fan divided by either the supply or extract volume whichever is the greater.

ELECTRICAL DATA

External fuse: Recommended 10 A.
The mains supply cable must be fitted with an external safety switch, which can cut the current to the entire unit.
Ambient temperature during operation –20° - +40°C

Unit Version	Fan Motors Power, 2 fans kW	Post Heater kW	Rated Power kW	Rated Current A	Electrical Supply V/Ph/Hz
Essential Enhanced HW Elite HW	0.34	–	0.36	2.9	230/1/50
Enhanced HE Elite HE	0.34	1.0	1.36	7.2	230/1/50

TEMPERATURE EFFICIENCY

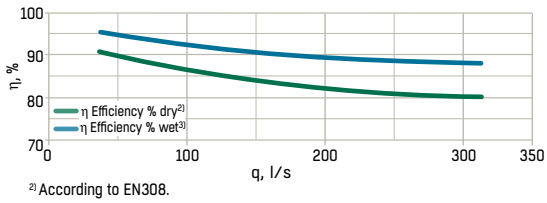

[2] According to EN308.
[3] –5° C/RH 90% Outdoor and +22° C/RH 50% Extract.

FILTER

Supply air: 550 x 307 x 48 mm, G4 alt F7
Extract air: 550 x 307 x 48 mm, G4 alt M5

PERFORMANCE CHARTS

SIZE 3

SUPPLY AIR FAN

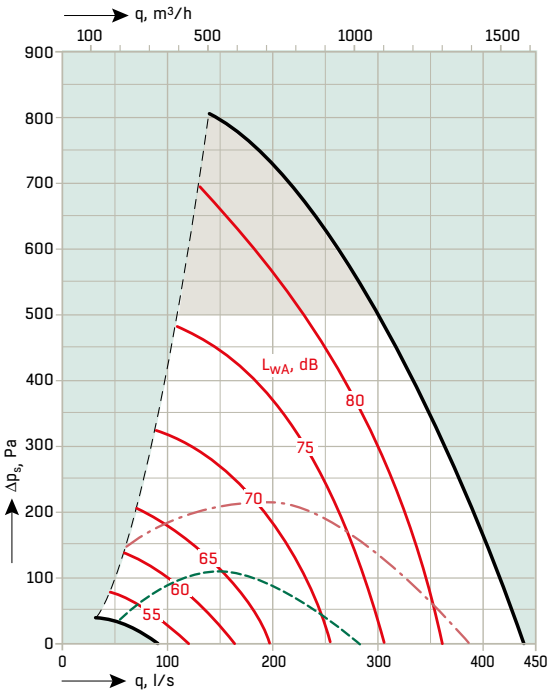

SFPv 0.75 SFPv [W/(l/s)][1)] SFPv 0.50 SFPv [W/(l/s)][1)]

[1)] Essential and Acoustic model with G4 filter

EXTRACT AIR FAN

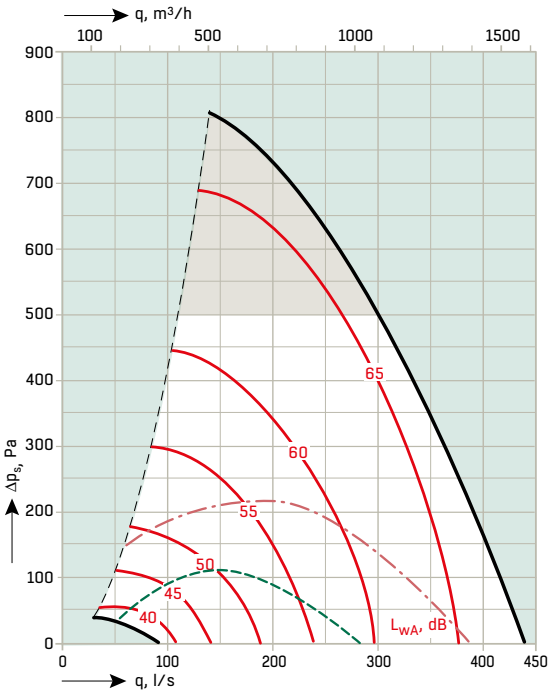

SFPv 0.75 SFPv [W/(l/s)][1)] SFPv 0.50 SFPv [W/(l/s)][1)]

[1)] Essential and Acoustic model with G4 filter

SYSTEM OVERVIEW

The diagrams show the available external pressure for the duct system. The weighted sound power noise levels given in dB(A) apply to ducts on the supply fan's outlet side (diagram 1) and extract fans' inlet side (diagram 2). The SFP_v values for each fan are calculated according to clean filters. SFPv is calculated for the complete unit and includes power to both supply and extract fan divided by either the supply or extract volume whichever is the greater.

ELECTRICAL DATA

External fuse: Recommended 10 A without electrical heater.
Recommended 16 A with electrical heater.

The mains supply cable must be fitted with an external safety switch, which can cut the current to the entire unit.

Ambient temperature during operation –20° - +40°C

Unit Version	Fan Motors Power, 2 fans kW	Post Heater kW	Rated Power kW	Rated Current A	Electrical Supply V/Ph/Hz
Essential Enhanced HW Elite HW	0.77	–	0.79	5.1	230/1/50
Enhanced HE Elite HE	0.77	1.5	2.29	11.6	230/1/50

TEMPERATURE EFFICIENCY

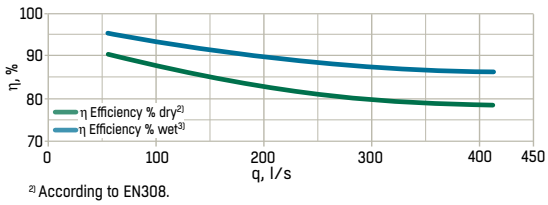

[2)] According to EN308.

[3)] –5° C/RH 90% Outdoor and +22° C/RH 50% Extract.

FILTER

Supply air: 2 x 348 x 352 x 48 mm, G4 alt F7

Extract air: 2 x 348 x 352 x 48 mm, G4 alt M5

PERFORMANCE CHARTS

SIZE 4

SUPPLY AIR FAN

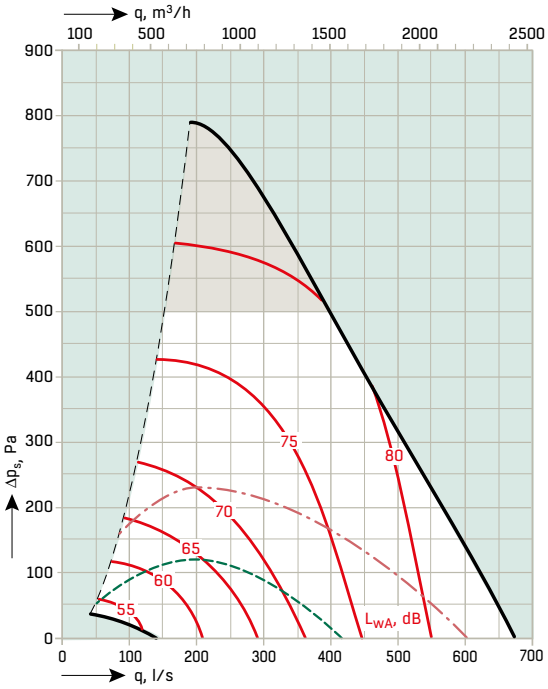

SFPv 0.75 SFPv [W/(l/s)][1)] SFPv 0.50 SFPv [W/(l/s)][1)]

[1)] Essential and Acoustic model with G4 filter

EXTRACT AIR FAN

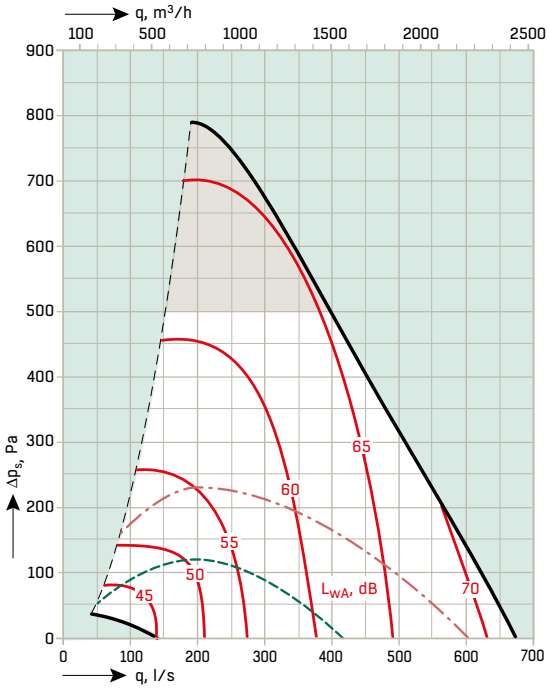

SFPv 0.75 SFPv [W/(l/s)][1)] SFPv 0.50 SFPv [W/(l/s)][1)]

[1)] Essential and Acoustic model with G4 filter

SYSTEM OVERVIEW

The diagrams show the available external pressure for the duct system. The weighted sound power noise levels given in dB(A) apply to ducts on the supply fan's outlet side (diagram 1) and extract fans' inlet side (diagram 2). The SFP_v values for each fan are calculated according to clean filters. SFPv is calculated for the complete unit and includes power to both supply and extract fan divided by either the supply or extract volume whichever is the greater.

ELECTRICAL DATA

External fuse: Recommended 10 A without electrical heater.
Recommended 16 A with electrical heater.

The mains supply cable must be fitted with an external safety switch, which can cut the current to the entire unit.

Ambient temperature during operation –20° - +40°C

Unit Version	Fan Motors Power, 2 fans kW	Post Heater kW	Rated Power kW	Rated Current A	Electrical Supply V/Ph/Hz
Essential Enhanced HW Elite HW	1.0	–	1.02	4.5	230/1/50
Enhanced HE Elite HE	1.0	2.0	3.02	13.2	230/1/50

TEMPERATURE EFFICIENCY

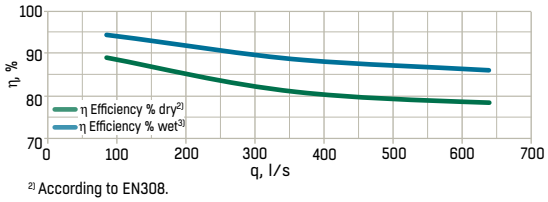

[2)] According to EN308.
[3)] –5° C/RH 90% Outdoor and +22° C/RH 50% Extract.

FILTER

Supply air: 2 x 348 x 352 x 48 mm, G4 alt F7
Extract air: 2 x 348 x 352 x 48 mm, G4 alt M5

PERFORMANCE CHARTS

SIZE 5

SUPPLY AIR FAN

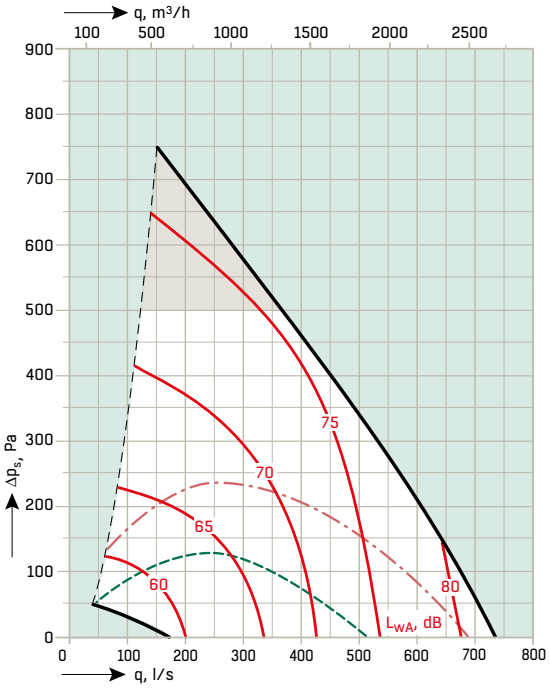

SFPv 0.75 SFPv [W/(l/s)][1)] SFPv 0.50 SFPv [W/(l/s)][1)]

[1)] Essential and Acoustic model with G4 filter

EXTRACT AIR FAN

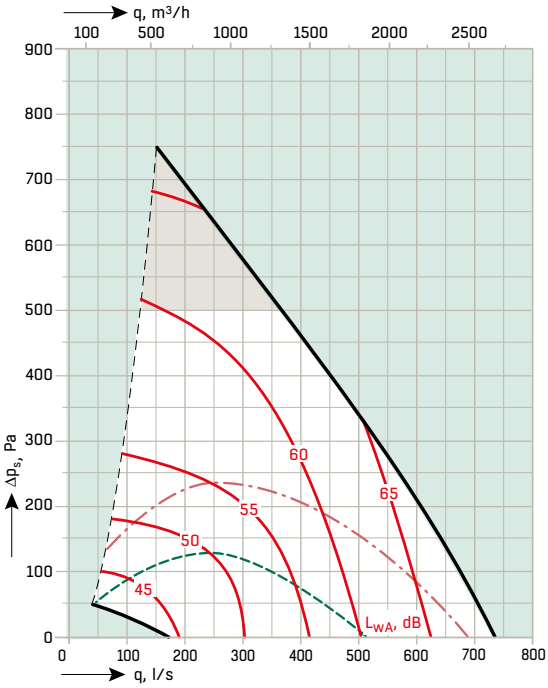

SFPv 0.75 SFPv [W/(l/s)][1)] SFPv 0.50 SFPv [W/(l/s)][1)]

[1)] Essential and Acoustic model with G4 filter

SYSTEM OVERVIEW

The diagrams show the available external pressure for the duct system. The weighted sound power noise levels given in dB(A) apply to ducts on the supply fan's outlet side (diagram 1) and extract fans' inlet side (diagram 2). The SFP_v values for each fan are calculated according to clean filters. SFPv is calculated for the complete unit and includes power to both supply and extract fan divided by either the supply or extract volume whichever is the greater.

ELECTRICAL DATA

External fuse: Recommended 10 A without electrical heater.
Recommended 16 A with electrical heater.

The mains supply cable must be fitted with an external safety switch, which can cut the current to the entire unit.

Ambient temperature during operation –20° - +40°C

Unit Version	Fan Motors Power, 2 fans kW	Post Heater kW	Rated Power kW	Rated Current A	Electrical Supply V/Ph/Hz
Essential Enhanced HW Elite HW	1.0	–	1.02	4.5	230/1/50
Enhanced HE Elite HE	1.0	2.5	3.52	15.4	230/1/50

TEMPERATURE EFFICIENCY

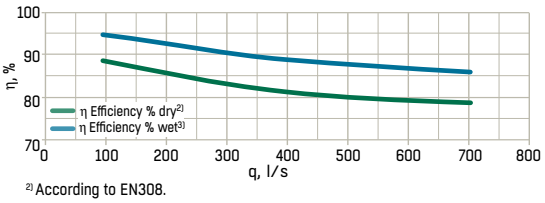

[2)] According to EN308.

[3)] –5° C/RH 90% Outdoor and +22° C/RH 50% Extract.

FILTER

Supply air: 2 x 398 x 407 x 48 mm, G4 alt F7

Extract air: 2 x 398 x 407 x 48 mm, G4 alt M5

PERFORMANCE CHARTS

SIZE 6

SUPPLY AIR FAN

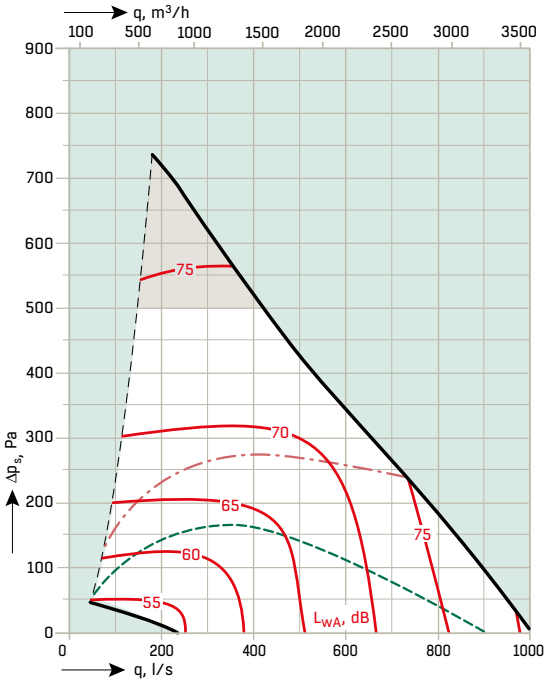

1) Essential and Acoustic model with G4 filter

EXTRACT AIR FAN

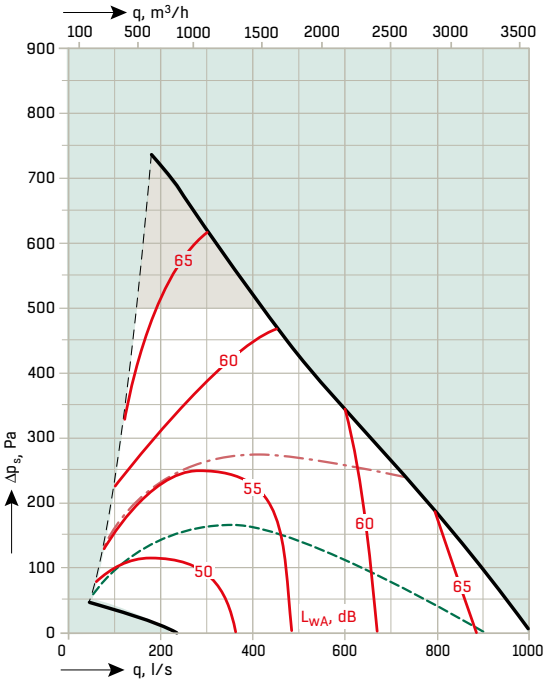

1) Essential and Acoustic model with G4 filter

SYSTEM OVERVIEW

The diagrams show the available external pressure for the duct system. The weighted sound power noise levels given in dB(A) apply to ducts on the supply fan's outlet side (diagram 1) and extract fans' inlet side (diagram 2). The SFP_v values for each fan are calculated according to clean filters. SFPv is calculated for the complete unit and includes power to both supply and extract fan divided by either the supply or extract volume whichever is the greater.

ELECTRICAL DATA

External fuse: Recommended 10 A.
The mains supply cable must be fitted with an external safety switch, which can cut the current to the entire unit.
Ambient temperature during operation –20° - +40°C

Unit Version	Fan Motors Power, 2 fans kW	Post Heater kW	Rated Power kW	Rated Current A	Electrical Supply V/Ph/Hz
Essential Enhanced HW Elite HW	1.0	–	1.02	4.4	230/1/50
Enhanced HE Elite HE	1.0	3.0	4.02	8.0	400/3/50

TEMPERATURE EFFICIENCY

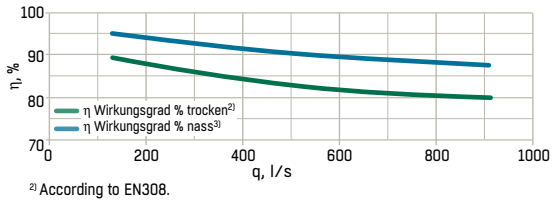

2) According to EN308.
3) –5° C/RH 90% Outdoor and +22° C/RH 50% Extract.

FILTER

Supply air: 2 x 398 x 602 x 48 mm, G4 alt F7
Extract air: 2 x 398 x 602 x 48 mm, G4 alt M5

ACCESSORIES

DUCT MOUNTED COOLING COIL - REDZ-14

Air cooler for cold water with copper tubes and aluminum fins. The air cooler is built into a galvanized sheet steel casing, AZ 185 with 9 mm insulation. The casing has a removable hatch for cleaning and duct connections with rubber ring seals. The air cooler has to be installed so that the distance to the fan or bend upstream of the cooler is at least 600 mm. The cooler is only available in a left-hand configuration.

Venting and draining is carried out via the pipe system. The pipe connection, Ø 22 mm, is located on the outlet end, is smooth and is intended for a compression fitting. The drainage tray is in stainless steel and has an R 1/2" connection.

Max. Operating pressure 1.0 Mpa.

Max. Operating temperature 100°C.

DUCT MOUNTED PRE HEATER - REDZ-82

An optional electric pre-heater (frost heater) is available as part of frost protection strategy and is delivered in the unit version ELITE. The heater is a stand alone device and has no electrical connection with the unit. The heater is made in Aluzink steel plate and its element in stainless steel according EN 1.4301. The heater complies with protection class C to EN 15727. Built-in electronic flow switch and regulator via built-in temperature sensor in duct. Set point adjustment is set on the heater cover.

Unit size	Diameter [mm]	Rated Power [kW]	Supply voltage [V]	Supply phase [nr]
1-2	250	3	230	1
3-4	250	6	400	2
5	315	9	400	3
6	400[1)]	12	400	3

[1)] *Needs a dimension change from 500 to 400.*

WEATHER COVER ROOF - REDZ-80

eCO PREMIUM™ unit can be installed outside when a weather cover roof is fitted. The separate roof made in Aluzink is done to resist outdoor environment and fulfills the C4 class (BSK 94/99 and ISO 12944-2).

STANDARD SILENCER - BDER

The standard silencer is a straight circular duct silencer with 50 mm mineral wool filling. Duct connections have rubber seals. The silencer consists of a perforated sheet metal pipe surrounded by a galvanized sheet steel mantle and end pieces sandwiching mineral wool covered with nonwoven fabric to prevent fibre migration. Fire resistance rating EI30. The available nominal lengths are 600, 900 & 1200 mm.

ACCESSORIES

SHUT OFF DAMPER WITH ACTUATOR - REDZ-87

Duct mounted damper in leakage class 3 (CEN 3). The damper is made of galvanized sheet steel and has a spring return on/off actuator mounted on it. The actuator is connected to a terminal block in the electrical cabinet. The damper has a duct connection with a rubber ring seal and it can be mounted directly onto the unit or into the duct. It is designed for duct insulation of up to 50 mm. At air speeds below 10 m/s and the damper fully open the sound power level is below 20 dB. A spring return shut-off damper should be used for units with a water coil. IP 54.

MOUNTING FEET - REDZ-88

The unit can be mounted directly onto the surface if this is flat and horizontal. The height of the mounting feet can be adjusted between 15 - 85 mm. Rubber feet are included in the kit.

WEATHER COWL KIT - REDZ-89

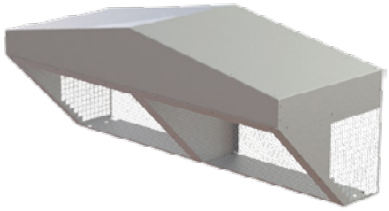

Outside wall cowl for outdoor air and exhaust air. The cowl comes with bird guard net and is made of Aluzink to resist outdoor environment. It fulfills the C4 class (BSK 94/99 and ISO 12944-2). The size allows to have a shut off damper (REDZ-87) mounted on the unit.

ACCESSORIES

CONTROLS

GENERAL

eCO PREMIUM™ is delivered with the integrated control platform Curo® and the belonging control panel, Curo® Touch. All internal components are prewired and the eCO PREMIUM™ is factory tested. The controls are easy to use. The control equipment can communicate via Modbus RS485 or Modbus TCP/IP. For adjustments and settings use the control panel Curo® Touch.

STANDARD CONTROL FUNCTIONS

- Fan speed control
  - VAV, Variable air volume (supply and extract)
- Temperature control
  - Supply air control
- Communication Modbus RS 485
- Fan monitoring
- Fire Protection system
- Night cooling
- Cooling recovery
- Frost protection, standard with a unit equipped with water heater coil
- Schedule
- Demand controlled defrosting (Thermo Ice)

ACCESSORIES /OPEN OPTIONS

- Fan speed control
  - CAV, Constant Air Volume
  - COP, Constant Pressure (supply and exhaust)
  - VAV, Variable Air Volume with CO_2 function
- Temperature control
  - Extract air control
  - Room control
  - Outdoor air compensation
- Communication Modbus TCP/IP
- Filter monitoring
- Extended and / or forced operation
  - External timer
  - PIR

STANDARD CONTROL FUNCTIONS

FAN SPEED CONTROL - VAV

Fan speeds are set individually between 30-100%

TEMPERATURE CONTROL

Supply air control

Constant supply air temperature is maintained.

COMMUNICATION

eCO PREMIUM™ is delivered with BMS communication (MODBUS RS-485)

FAN MONITORING

The controls will stop the unit and generate an alarm if the flow of the fans is too low.

FIRE PROTECTION

A separate fire protection system may be connected to the unit.
Function: stop the unit.

NIGHT COOLING (FREE COOLING)

Night cooling is used during warm summer nights in order to reduce the indoor temperature. This is done by cooling down the warm indoor temperature with cold outdoor air.

COOLING RECOVERY

When there is a cooling demand the unit will automatically close the bypass to cool the supply air. It happens when the extract air temperature is lower than the outdoor air temperature and there is a cooling demand.

SCHEDULE

The controller has three types of internal time schedules, Weekly, Single date and Date period.

DEFROSTING (THERMO ICE)

eCO PREMIUM™ uses an advanced defrosting function that ensures that the annual heat recovery efficiency is as high as possible.

During cold periods if icing has occurred on the counter flow heat exchanger then the defrosting function will stop the supply fan and start the defrosting process.

The defrosting function will only be active when necessary, a large part of the counter flow needs to be iced before the defrosting function starts.

ACCESSORIES

CONTROLS CONT.

ACCESSORIES /OPEN OPTIONS

FAN SPEED CONTROL *REDA-a-b-cc-d-**e**-ff*

Different fan speed control is available to individually adjust the airflow for supply and exhaust side. The following options can be selected and will automatic be handled by the CURO® Control.

- **COP**. Constant Pressure
- **CAV**. Constant Air Volume
- **VAV+CO_2**. Fan speeds are set individually, overrides by the demand ventilation (CO_2) when the set PPM value is exceeded.

TEMPERATURE CONTROL REDZ-01

Extract air control

Constant extract air temperature is maintained via cascade regulation of the supply air temperature with min- and max temperature limits.

Room air control

Constant room air temperature is maintained via cascade regulation of the supply air temperature with min- and max temperature limits.

Outdoor air compensation

The function offsets the set point of the supply air temperature. Not available with extract- or room air control.

COMMUNICATION - REDZ-05

eCO PREMIUM™ can be delivered with Modbus TCP/IP via separate Ethernet card.

FILTER MONITORS - REDZ-28

The controls will generate an alarm if the pressure drop over each filter exceeds set value.

SAFETY SWITCH - REDZ-39

The mains supply cable must be fitted with an external safety switch, which can cut the current to the entire unit. Is available in 16A & 25 A.

EXTENDED FORCED OPERATION - REDZ-40

External timer

PIR

External timer (setting 0-5 hours) or occupancy detector (PIR). Both for external and recessed mounting.

COIL CONTROL - REDZ-70

Air heater

Control signal (0-10V) for a valve actuator.

Freeze protection: When the unit is not in operation mode the water temperature will be held constant at 25°C. During operation mode the valve will be controlled so that the returned water temperature will not be below 15° C. The unit will be stopped and an alarm will be activated If the returned water temperature is below 7° C.

Air cooler

Control signal 0-10 V for air cooler, water.

Valve actuator for air heater/ cooler

Valve actuator customized to fit a valve with a 5.5mm and G3/4" thread.

RECTANGULAR BOX FANS
KATANA EC

PRODUCT FACTS

- Air flow up to 3.3 m^3/s
- Static pressures up to 877 Pa
- Speed controllable external rotor motors
- Horizontal or vertical mounting
- Low profile ideal for mounting in ceiling voids
- The fans are suitable for mounting internally
- Speed Controllable (0-10V) via potentiometer

ELECTRICAL SUPPLY

220-240V/50Hz/1ϕ & 380-420V/50Hz/3ϕ

TEMPERATURE RANGE

Maximum temperature from +45°C to +50°C (depending on the model)

SIZES

315, 355, 400, 450, 500 & 560 mm

CONSTRUCTION

The Katana is a centrifugal in-line duct fan which can be mounted in any position. Constructed from galvanized sheet metal. The flange is drilled to allow for ease of installation for mounting in any position. Equipped with complete swing-out motorised impellers for easy inspection cleaning and maintenance. The fans are driven by an external rotor EC motor, fitted in the centrifugal impeller.

IMPELLER

The Katana has a backward curved centrifugal impeller.

MOTOR

External rotor motor directly coupled class F, IP54 except model 200 which is IP44. Motor-impeller dynamically balanced according to ISO 1940. The integrated motor protection is signaled via alarm relay.

SPEED CONTROLERS

Speed is 100% infinitely variable using 0-10 volt potentiometer.

PRODUCT CODE

Katana EC 225-2-1(A)

- Katana - Product Name
- 225 = Impeller diameter size (mm)
- 2 = 2 pole or 4 pole
- 1 = 1ϕ or 3 = 3ϕ

ACCESSORIES (Pages 238-248) - CONTROLLERS (Pages 249-297)

The range of accessories include duct clamps, filters, guards, dampers, silencers, mounting brackets, shutters. A quick reference guide is shown below.

RSA

RFC

RCF

RLS

RAD

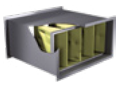

RFB

0-10v Potentiometer

PERFORMANCE AND ELECTRICAL DATA

220-240V/50HZ/1ϕ & 380-420V/50HZ/3ϕ

PERFORMANCE TABLE

Product Code	m³/s @ Pa (Static)																	
	0	50	100	150	200	250	300	350	400	450	500	550	600	650	700	750	800	850
KATANA EC 315	0.57	0.54	0.5	0.47	0.43	0.38	0.33	0.26	0.09									
KATANA EC 355	0.98	0.93	0.87	0.82	0.77	0.71	0.63	0.52	0.38									
KATANA EC 355	1.1	1.06	1.03	0.99	0.94	0.9	0.86	0.81	0.76	0.69	0.61	0.51	0.35					
KATANA EC 400	1.36	1.32	1.28	1.23	1.19	1.14	1.09	1.04	0.98	0.92	0.85	0.76	0.66	0.55	0.19			
KATANA EC 450	1.81	1.76	1.71	1.67	1.62	1.57	1.52	1.47	1.41	1.36	1.29	1.23	1.16	1.08	0.99	0.9	0.81	0.7
KATANA EC 500	2.77	2.69	2.62	2.54	2.46	2.38	2.3	2.22	2.13	2.04	1.95	1.85	1.75	1.63	1.5	1.35	1.14	0.82
KATANA EC 560	3.32	3.24	3.16	3.08	3	2.91	2.83	2.74	2.65	2.56	2.46	2.35	2.23	2.09	1.92	1.71	1.42	0.91

PRODUCT AND ELECTRICAL DETAILS

Product Code	Product Number	Speed rpm	Motor Frame	Electrical Supply	Electrical Current			Wiring Diagrams	**Speed Controllers	Maximum Operating Temp°C	Breakout
					Motor (kW)	Full Load Current (A)	Starting Current (A)		Potentiometer		*Sound Level db(A) (3m)
KATANA EC 315-1	RE315005	1650	Integral	220-240 V/50 Hz/1 Ph	0.21	1.3	1.3	CD3011	0-10 V Pot	50	50
KATANA EC 355-1	RE355005	1500	Integral	220-240 V/50 Hz/1 Ph	0.37	2.2	2.2	CD3011	0-10 V Pot	50	48

Product Code	Product Number	Speed rpm	Motor Frame	Electrical Supply	Electrical Current			Wiring Diagrams	**Speed Controllers	Maximum Operating Temp°C	Breakout
					Motor (kW)	Full Load Current (A)	Starting Current (A)		Potentiometer		*Sound Level db(A) (3m)
KATANA EC 355-3	RE355007	1800	Integral	380-420 V/50 Hz/3 Ph	0.6	1.15	1.15	CD3012	0-10 V Pot	50	50
KATANA EC 400-3	RE400005	1700	Integral	380-420 V/50 Hz/3 Ph	0.8	1.45	1.45	CD3012	0-10 V Pot	50	49
KATANA EC 450-3	RE450005	1700	Integral	380-420 V/50 Hz/3 Ph	1.3	2.3	2.3	CD3012	0-10 V Pot	50	47
KATANA EC 500-3	RE500005	1500	Integral	380-420 V/50 Hz/3 Ph	1.9	3	3	CD3012	0-10 V Pot	50	48
KATANA EC 560-3	RE560005	1400	Integral	380-420 V/50 Hz/3 Ph	2.6	4.1	4.1	CD3012	0-10 V Pot	50	59

*Sound power levels are average dBA at 3 metres distance over sphere, under free field conditions and are presented for comparative purposes only. Values shown are those at the mid-point of the performance curve.

** For speed controllers, please see pages 250-297. For ErP efficiency ratings and grades please refer to our Fan Selector for more information.

Products in **bold** are available from our UK Distributors on next day delivery, if ordered by 4pm. Please call to confirm availability on 01206 222 580.

DRAWING AND DIMENSIONS

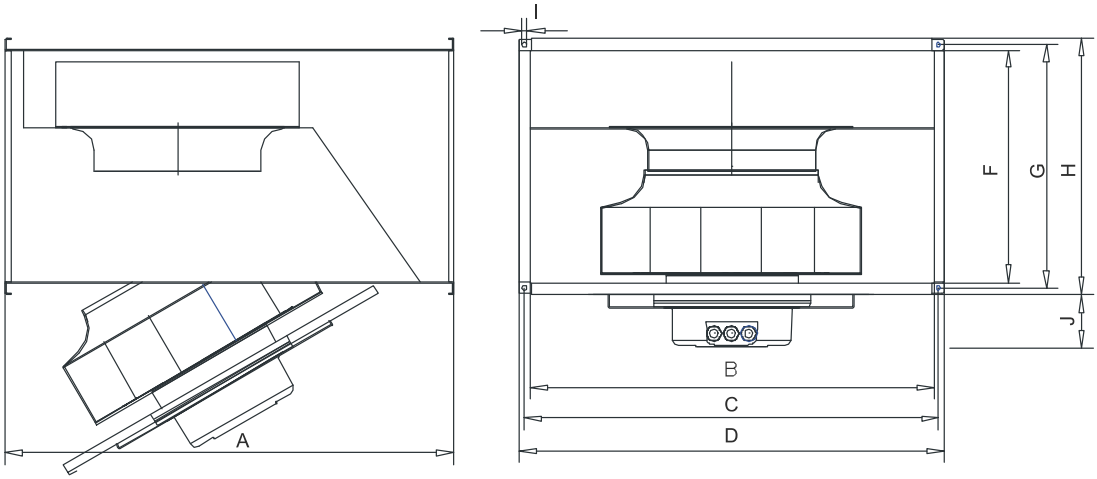

Product Code	A	B	C	D	F	G	H	I	J	Weight max (kg)
KATANA EC 315-1	700	600	620	640	350	370	391	9	81	36
KATANA EC 355-1	700	600	620	640	350	370	391	9	52	36.5
KATANA EC 355-3	700	600	620	640	350	370	391	9	52	36.5
KATANA EC 400-3	700	600	620	640	350	370	391	9	84	36.5
KATANA EC 450-3	780	700	720	740	400	420	442	9	73	51
KATANA EC 500-3	880	800	820	840	500	520	542	9	88	78
KATANA EC 560-3	982	1000	1020	1040	500	520	543	9	88	91

Products in **bold** are available from our UK Distributors on next day delivery, if ordered by 4pm. Please call to confirm availability on 01206 222 580.

PERFORMANCE CHARTS

KATANA EC 315-1 - RE315005

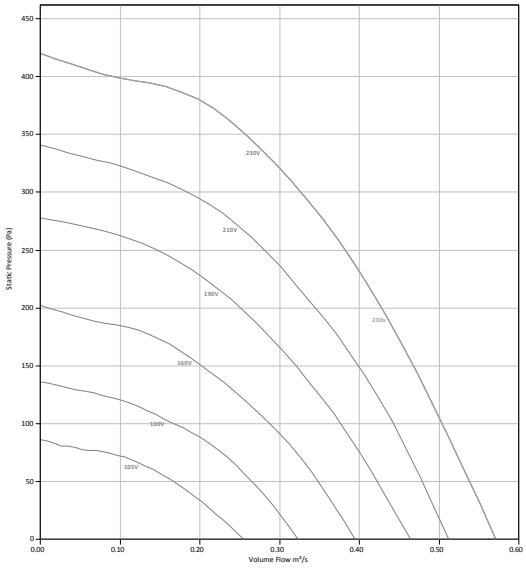

KATANA EC 355-1 - RE355005

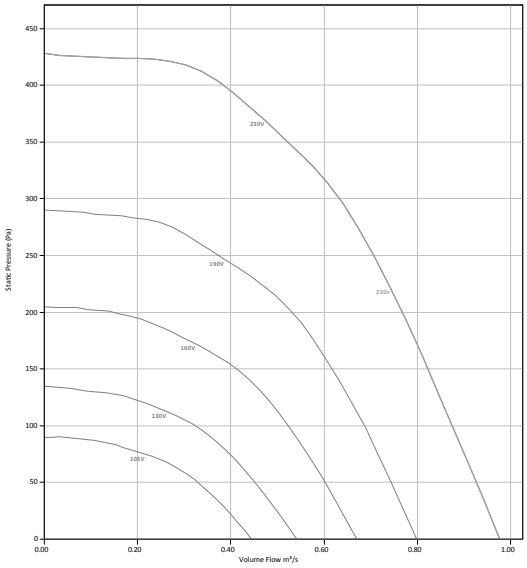

KATANA EC 355-3 - RE355007

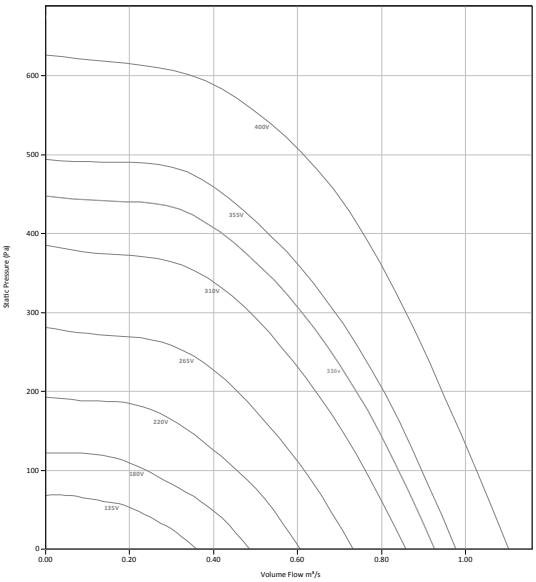

KATANA EC 400-3 - RE400005

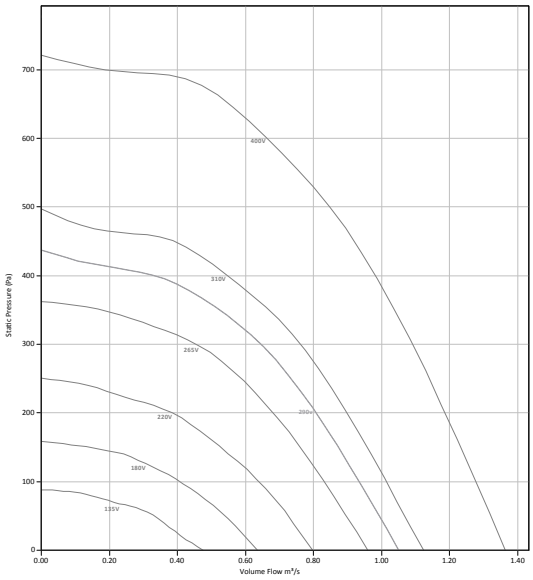

Products in **bold** are available from our UK Distributors on next day delivery, if ordered by 4pm. Please call to confirm availability on 01206 222 580.

PERFORMANCE CHARTS

KATANA EC 450-3 - RE450005

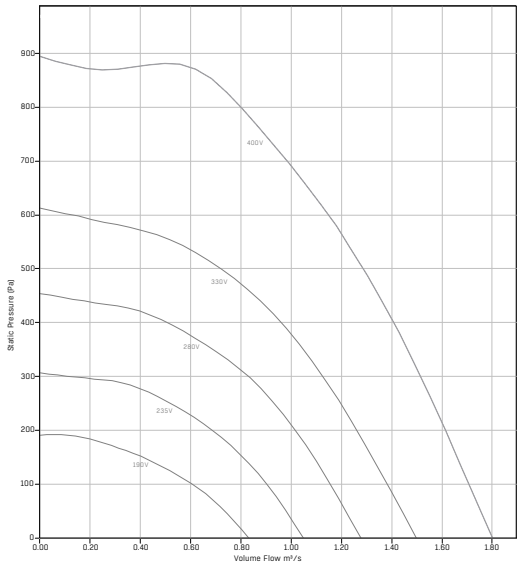

KATANA EC 500-3 - RE500005

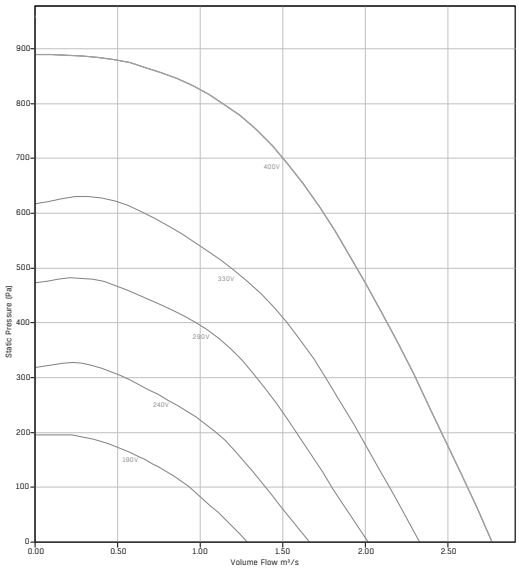

KATANA EC 560-3 - RE560005

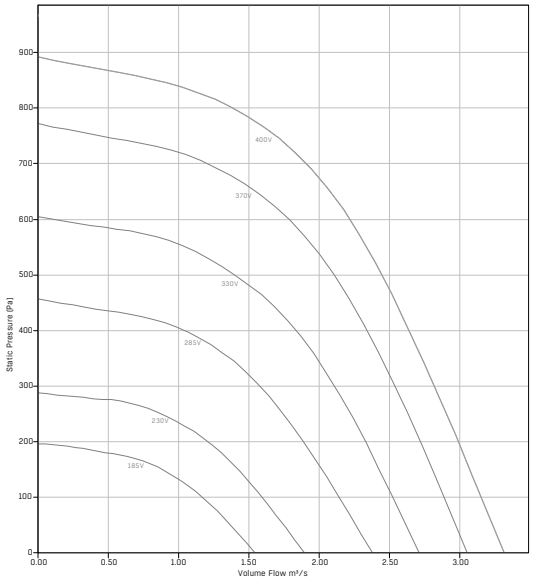

Products in **bold** are available from our UK Distributors on next day delivery, if ordered by 4pm. Please call to confirm availability on 01206 222 580.

WIRING DIAGRAMS - KATANA EC

CD3011

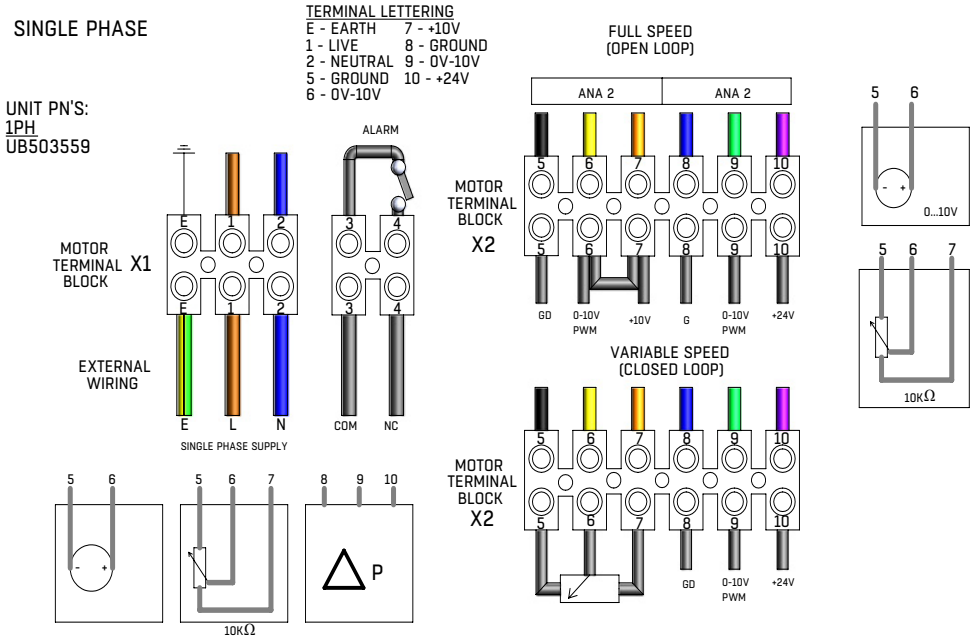

CD3012

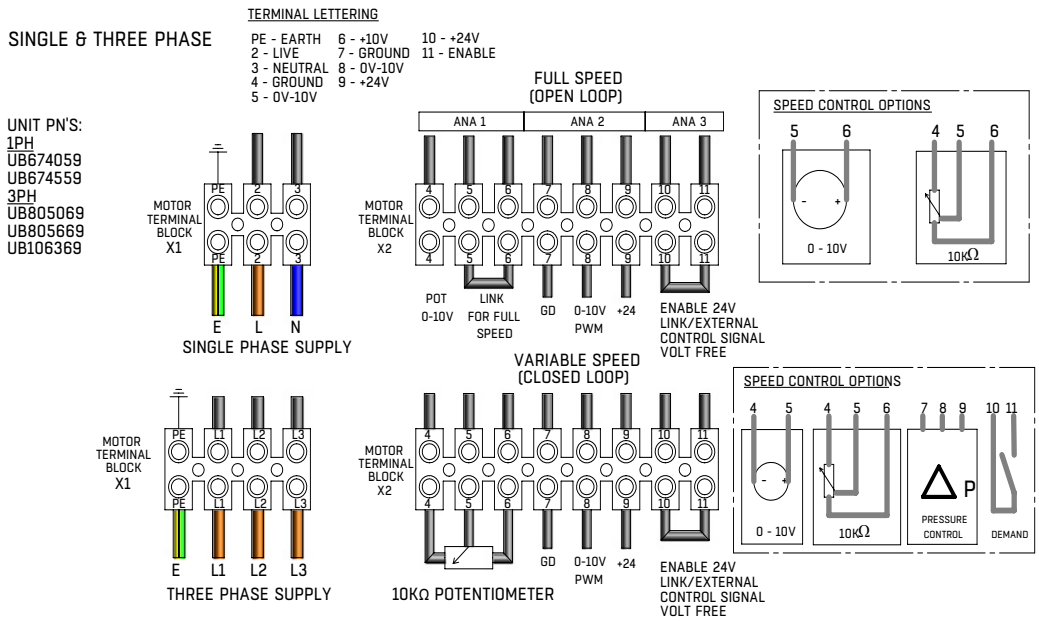

Products in **bold** are available from our UK Distributors on next day delivery, if ordered by 4pm. Please call to confirm availability on 01206 222 580.

CIRCULAR SINGLE BOX FANS
SABINA EC (COMPACT)

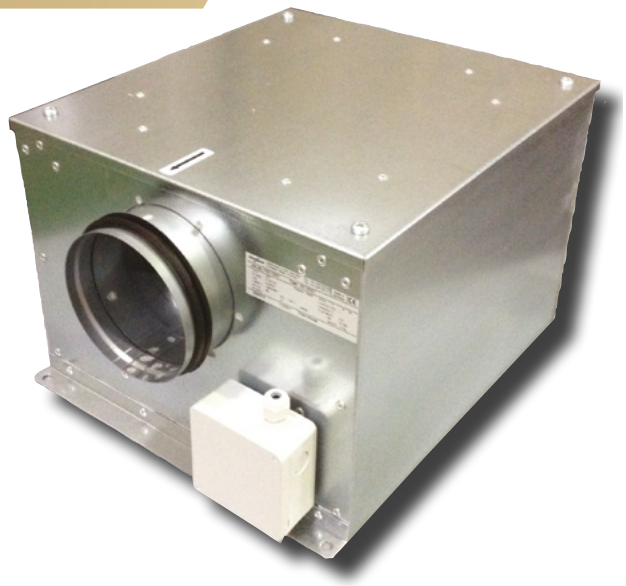

PRODUCT FACTS

- Air flow up to 0.72 m^3/s
- Static pressures up to 850 Pa
- Low noise levels
- Corrosion resistant design
- Easy electrical connection via terminal box
- Backward curved impellerting in all orientation

ELECTRICAL SUPPLY

220-240V/50Hz/1ϕ

TEMPERATURE RANGE

Up to 50°C

SIZES

125, 160, 200, 250, 315, 355 and 400mm

CONSTRUCTION

The Sabina has casing which is galvanized and made from sheet steel. Within the unit there is acoustic insulation made from fibre glass with a thickness of 40 mm.

MOUNTING

The integral fan allows the Sabina EC Compact to be installed in any position, whether it's a wall, ceiling installation or inverted for bottom access.

IMPELLER

External rotor motors are used in protection class IP44/54 with humidity protection, ball bearing-mounted and with built-in thermal contacts for motor protection. In the Evolution version, the impeller is forward curved and has double-sided inlets. The impellers are mounted directly on the rotors of the external rotor motors and are dynamically balanced on two levels with the rotor according to quality level G2.5 as per DIN ISO 1940.

MOTOR

This product incorporates EC motor technology which is designed to optimise energy savings. Motor speed control is via a 0-10v signal giving a high degree of controllability.

The electrical connection is made through a terminal box with protection class IP44.

SPEED CONTROLERS

All units are fully speed controllable using our 2nd generation integral intelligent fan controller or 0-10 volt potentiometer.

PRODUCT CODE

SABINA EC 125 (Compact)

- SABINA - Product Name
- EC - EC Motor
- 125 = Diameter size (mm)

ACCESSORIES (Pages 238-248) - **CONTROLLERS** (Pages 249-297)

The range of accessories include duct clamps, filters, guards, dampers, silencers, mounting brackets, shutters. A quick reference guide is shown below.

CFC

BDS

FLS

BDER

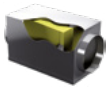

CFB

Controls Potentiometer

iFan

PERFORMANCE & ELECTRICAL DATA

220-240V/50HZ/1ϕ

PERFORMANCE TABLE

Product Code	m³/s @ Pa (Static)																	
	0	50	100	150	200	250	300	350	400	450	500	550	600	650	700	750	800	850
Sabina EC 125mm (Compact)	**0.11**	**0.1**	**0.09**	**0.08**	**0.08**	**0.07**	**0.06**											
Sabina EC 160mm (Compact)	**0.16**	**0.15**	**0.14**	**0.12**	**0.11**	**0.08**												
Sabina EC 200mm (Compact)	**0.22**	**0.2**	**0.19**	**0.18**	**0.17**	**0.16**	**0.15**	**0.13**	**0.11**	**0.1**	**0.07**	**0.03**	**0.01**					
Sabina EC 250mm (Compact)	**0.3**	**0.29**	**0.27**	**0.26**	**0.25**	**0.23**	**0.21**	**0.19**	**0.17**	**0.14**	**0.09**							
Sabina EC 315mm (Compact)	**0.49**	**0.47**	**0.46**	**0.44**	**0.42**	**0.4**	**0.38**	**0.36**	**0.33**	**0.31**	**0.28**	**0.24**	**0.2**	**0.16**	**0.11**			
Sabina EC 355mm (Compact)	**0.54**	**0.52**	**0.5**	**0.48**	**0.46**	**0.44**	**0.42**	**0.4**	**0.38**	**0.36**	**0.33**	**0.3**	**0.27**	**0.23**	**0.19**	**0.15**	**0.09**	
Sabina EC 400mm (Compact)	**0.72**	**0.7**	**0.67**	**0.65**	**0.63**	**0.61**	**0.59**	**0.56**	**0.54**	**0.52**	**0.49**	**0.47**	**0.44**	**0.4**	**0.36**	**0.31**	**0.25**	**0.19**

PRODUCT AND ELECTRICAL DETAILS

Product Code	Product Number	Speed	Motor Frame	Electrical Current			Wiring Diagrams	**Speed Controllers	Maximum Operating Temp°C	Breakout
				Motor (kW)	Full Load Current (A)	Starting Current (A)		Potentio-meter		Sound Level db(A) (3m)*
Sabina EC 125mm (Compact)	**ZE125003**	**2600**	**Integral**	**0.065**	**0.45**	**0.45**	**CD3026**	**SDPV**	**50**	**20**
Sabina EC 160mm (Compact)	**ZE160003**	**2400**	**Integral**	**0.12**	**0.81**	**0.81**	**CD3026**	**SDPV**	**50**	**25**
Sabina EC 200mm (Compact)	**ZE200003**	**2470**	**Integral**	**0.16**	**1.14**	**1.14**	**CD3026**	**SDPV**	**50**	**30**
Sabina EC 250mm (Compact)	**ZE250004**	**2540**	**Integral**	**0.22**	**0.95**	**0.95**	**CD3026**	**SDPV**	**50**	**30**
Sabina EC 315mm (Compact)	**ZE315003**	**2550**	**Integral**	**0.33**	**1.9**	**1.9**	**CD3011**	**SDPV**	**50**	**36**
Sabina EC 355mm (Compact)	**ZE355003**	**2700**	**Integral**	**0.4**	**2.3**	**2.3**	**CD3011**	**SDPV**	**50**	**37**
Sabina EC 400mm (Compact)	**ZE400003**	**2600**	**Integral**	**0.6**	**2.6**	**2.6**	**1.444**	**SDPV**	**50**	**47**

*Sound power levels are average dBA at 3 metres distance over sphere, under free field conditions and are presented for comparative purposes only. Values shown are those at the mid-point of the performance curve. For ErP efficiency ratings and grades please refer to our Fan Selector for more information.

Products in **bold** are available from our UK Distributors on next day delivery, if ordered by 4pm. Please call to confirm availability on 01206 222 580.

DRAWINGS AND DIMENSIONS

SABINA EC 125, 160, 200, 250, 315, 355 AND 400

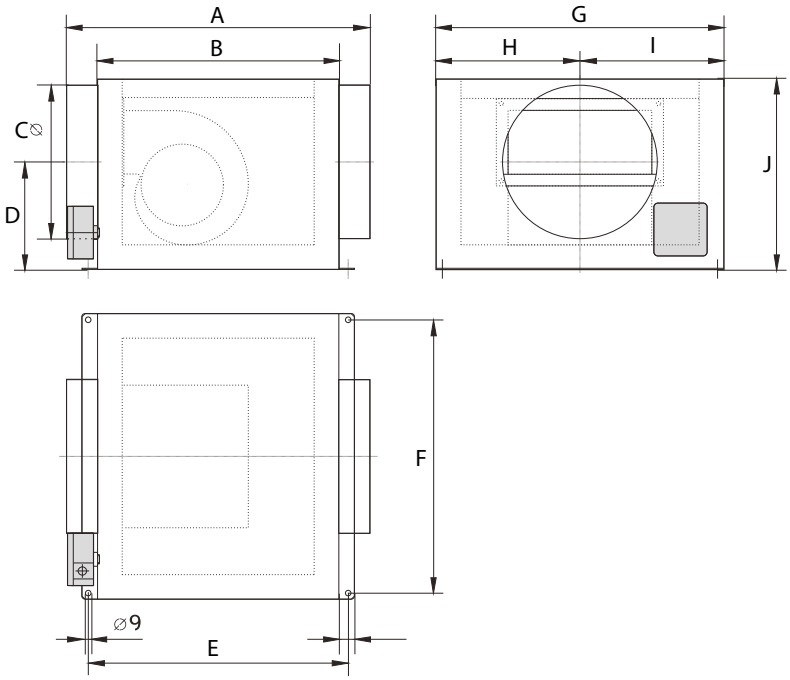

Size	A	B	C	D	E	F	G	H	I	J	Weight (kg)
Sabina 125	400	300	122	97	332	270	300	205	170	260	11
Sabina 160	460	360	160	185	390	320	340	170	170	280	12.5
Sabina 200	490	390	200	200	420	345	365	183	183	315	14.4
Sabina 250	490	390	250	175	420	445	465	233	233	315	18.5
Sabina 315	680	580	315	228	610	575	595	210	385	425	40
Sabina 355	680	580	355	228	610	575	595	230	365	425	40
Sabina 400	680	650	400	250	610	625	645	250	395	475	46

All dimensions shown in mm

PERFORMANCE CHARTS

SABINA EC - 125 (COMPACT) - ZE125003

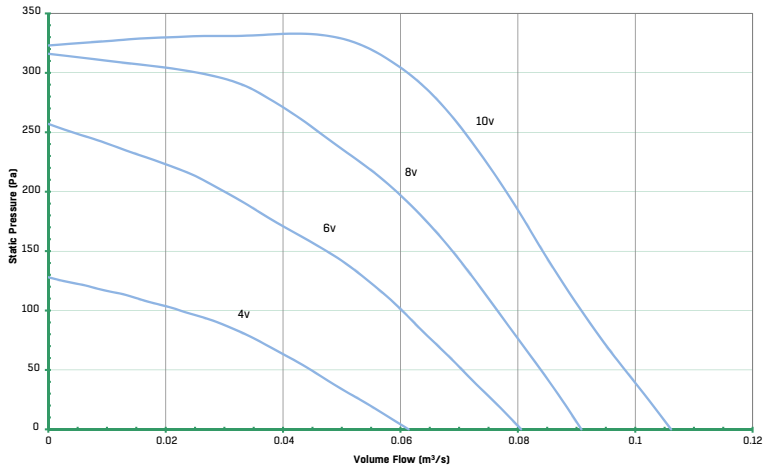

SABINA EC - 160 (COMPACT) - ZE160003

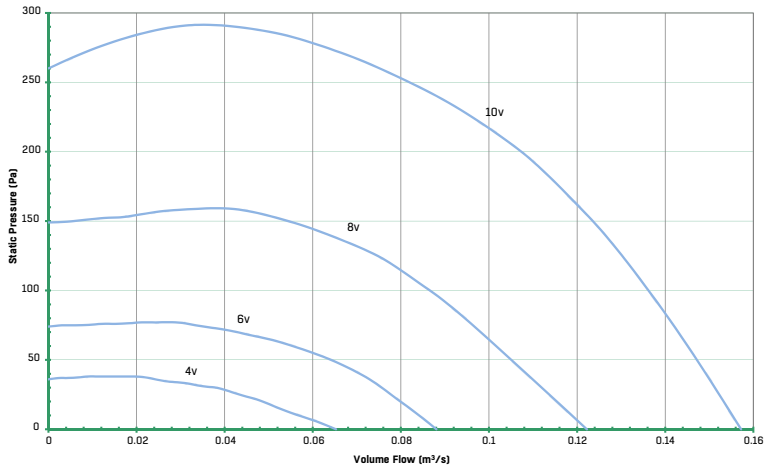

SABINA EC - 200 (COMPACT) - ZE200003

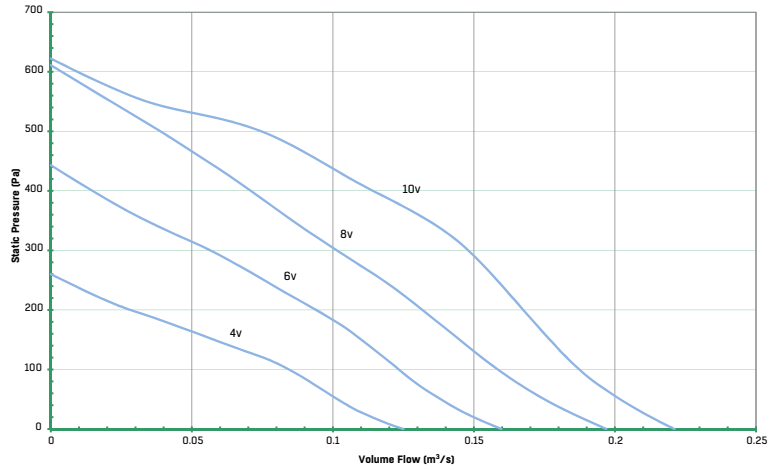

PERFORMANCE CHARTS

SABINA EC - 250 (COMPACT) - ZE250004

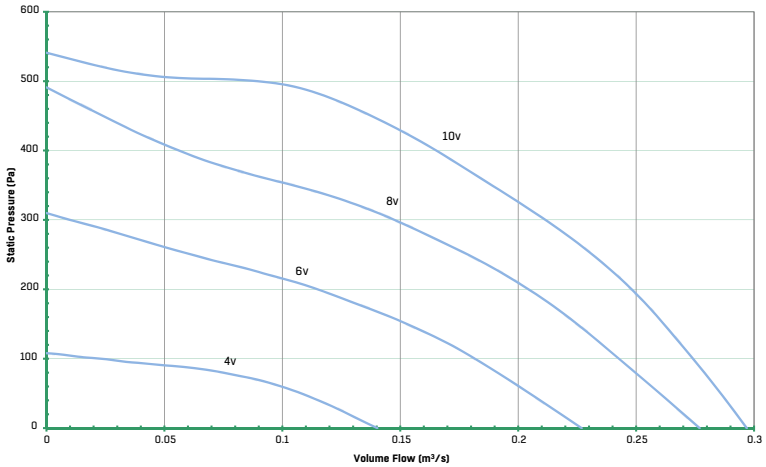

SABINA EC - 315 (COMPACT) - ZE315003

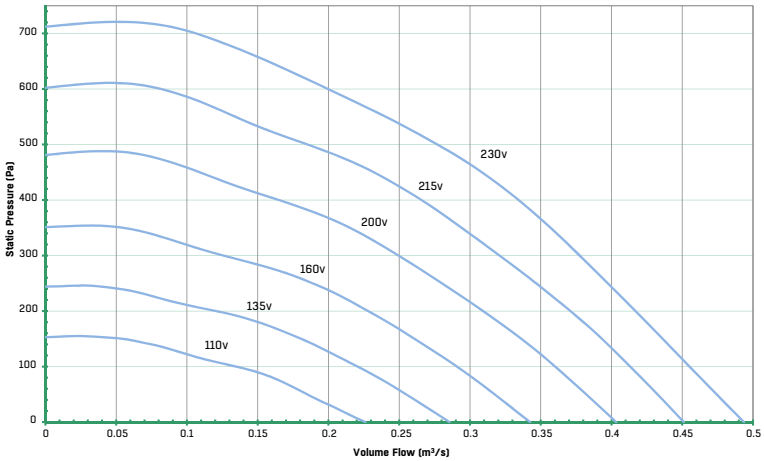

SABINA EC - 355 (COMPACT) - ZE355003

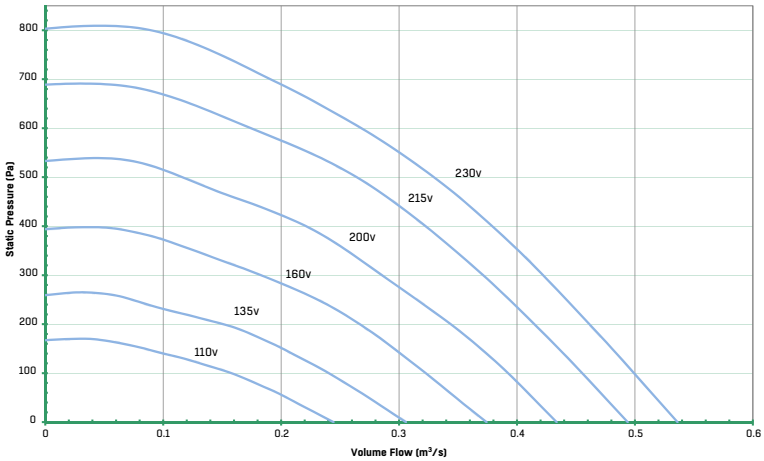

PERFORMANCE CHARTS

SABINA EC - 400 (COMPACT) - ZE400003

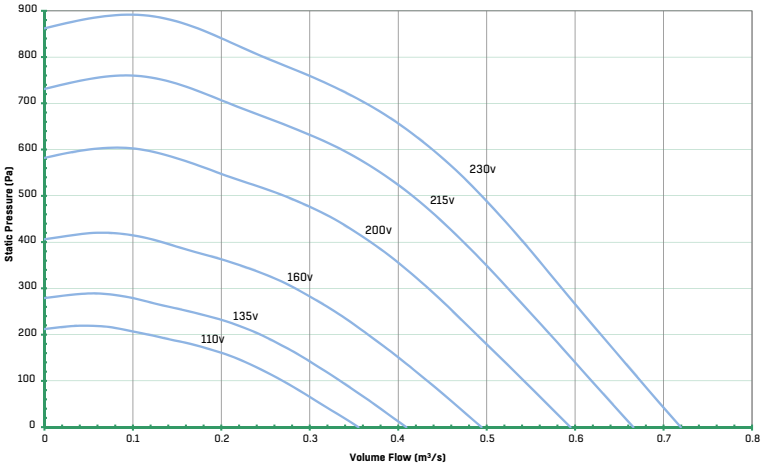

WIRING DIAGRAM - SABINA EC (COMPACT)

CD3026

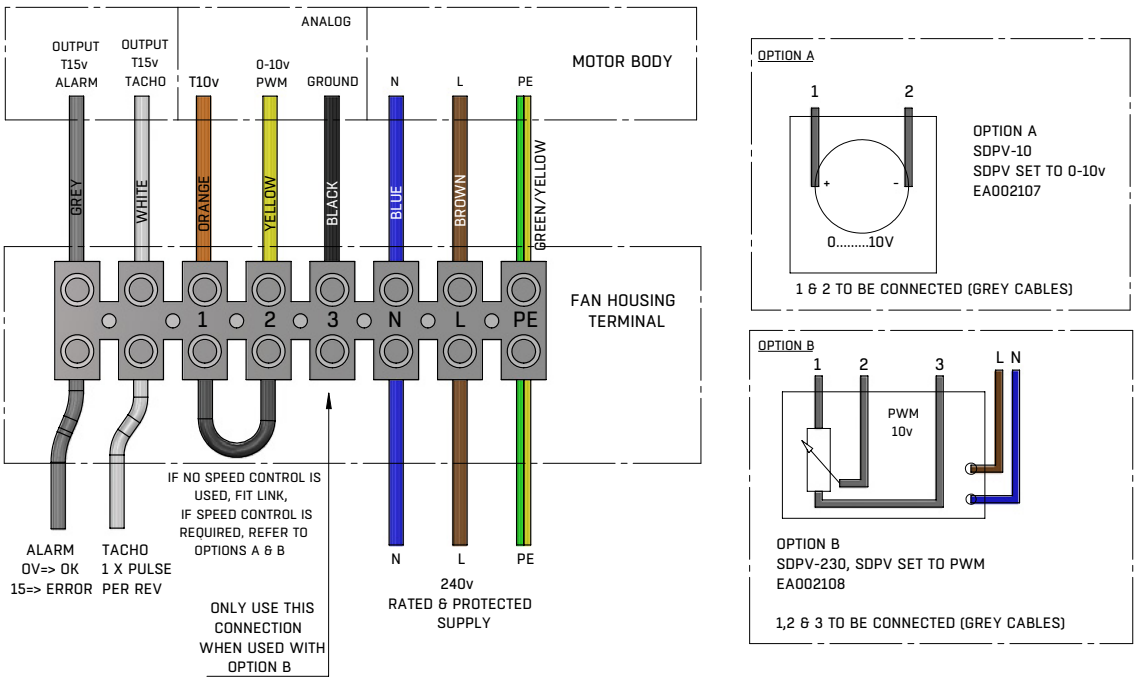

WIRING DIAGRAM - SABINA EC (COMPACT)

CD3011

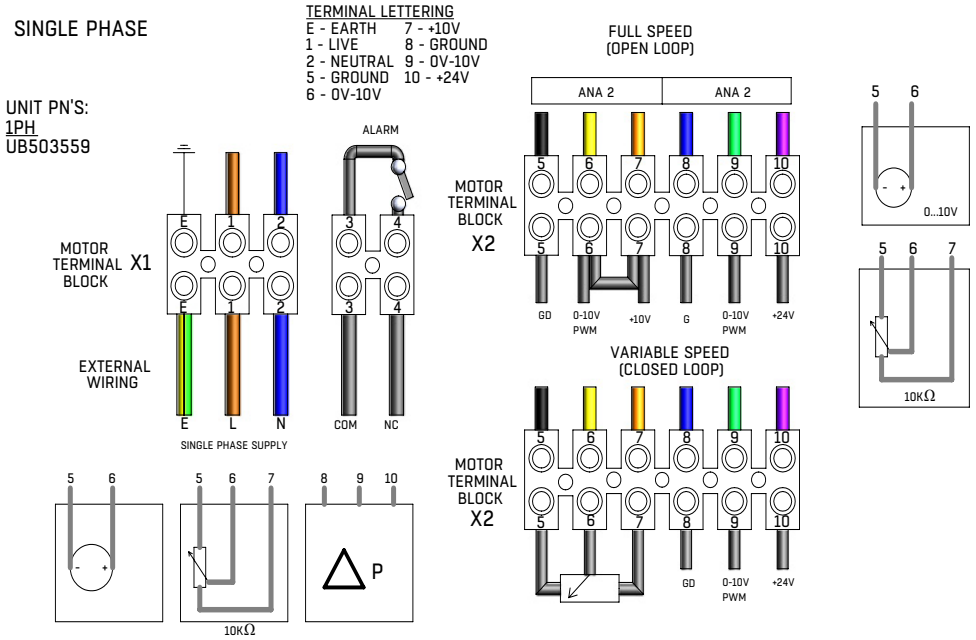

1.444

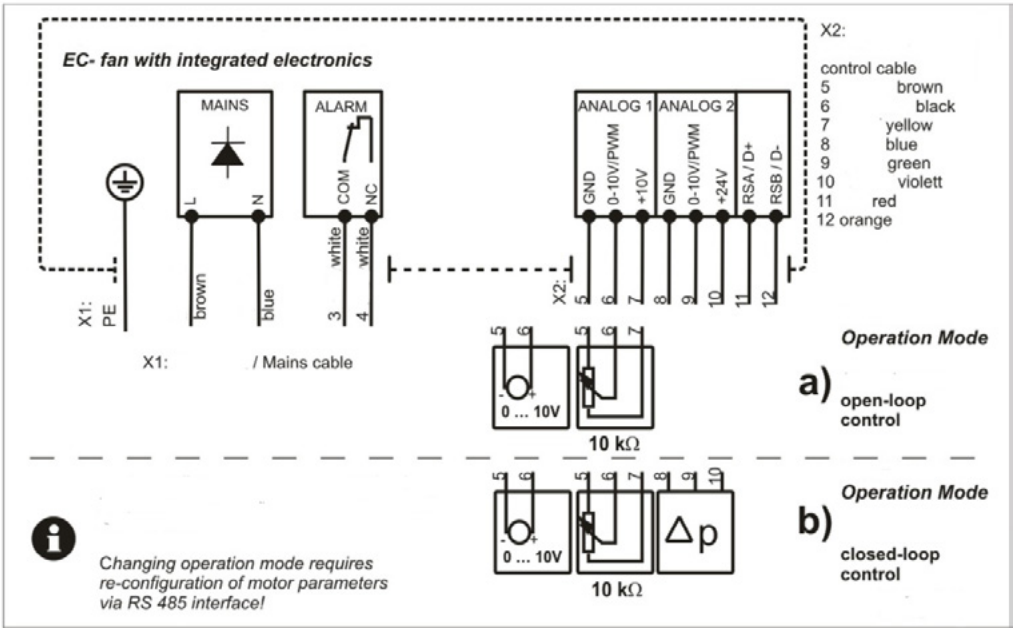

CENTRIFLOW 3D®

» DELIVERING SUPERIOR PERFORMANCE INSIDE YOUR AIR HANDLING UNIT

CENTRIFLOW 3D BENEFITS

- Designed for optimised system efficiency
- High precision CFD designed hollow aerofoil profiled blades, guarantee consistently high performance
- Lowest noise level on inlet and outlet
- Unique mix flow impeller design
- Air flow range from 200 to 60.000 m^3/h
- Available in horisontal and vertical models
- Full technical support

The new CentriFlow 3D plug fan by Fläkt Woods is developed to deliver superior performances inside your Air Handling Unit.

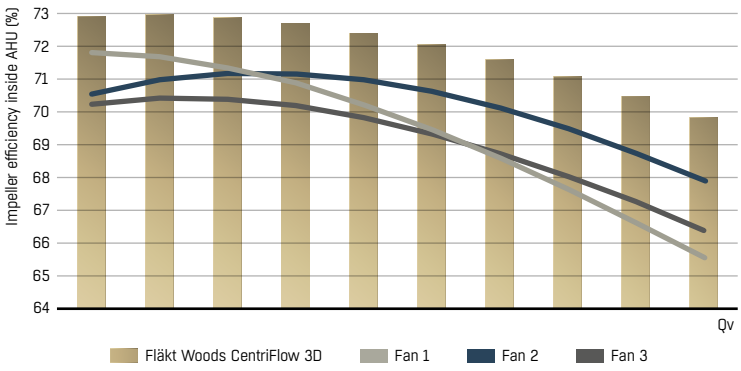

Innovative mix flow impeller design improves the airflow pattern for a more natural and efficient flow through the AHU. Fläkt Woods ensure you a world class performance, with proven low running costs.

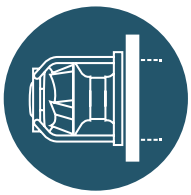

ANOTHER
INNOVATION
FROM FLÄKT WOODS

CIRCULAR TWIN BOX FANS
DAISHO EC

PRODUCT FACTS

- Air flow up to 3.5 m^3/s
- Static pressures up to 1250 Pa
- Suitable for variable or constant pressure systems
- Twin Fans for run and standby operation
- Suitable for external mouting as standard
- Includes BMS interface as standard

ELECTRICAL SUPPLY

220-240V/50Hz/1ϕ
380-420V/50Hz/3ϕ (450, 630 & 1000 size only)

TEMPERATURE RANGE

Up to 60ºC (depending on size see table for more information)

SIZES

125, 150, 200, 250, 315, 450, 630 & 1000 mm

CONSTRUCTION

Casings are manufactured from pre-galvanised sheet steel and are carefully designed to provide a strong and rigid casing to minimise vibration. Daisho EC Fan units have circular inlet and outlet spigots with a double-lip neoprene seal to minimise air leakage. The units are internally lined with re-engineered, high quality acoustic foam with an erosion proof facing to prevent the carry over of fibres into the air stream. Units are designed for either internal or external mounting as standard. Woods offers circular spigots for sizes up to 630 diameter as standard. The largest unit has a 1000 x 600mm.

MOUNTING

Suitable for both horizontal and vertical mounting (suitable for vertical mounting air flow up only, up to size 250).

IMPELLER

Impellers high efficiency backward curved centrifugal impeller design.

MOTOR

This product incorporates EC Motor technology which is designed to optimise energy savings. Motor speed control is via a 0-10v signal giving a high degree of controllability. Operating temperature range from -25ºC to +65ºC.

SPEED CONTROLERS

All units are fully speed controllable using our '2nd generation' integral intelligent fan controller. The 3 phase Daisho EC Fan variant is fitted with an electrical isolator as standard.

PRODUCT CODE

DAISHO EC 125

- DAISHO - Product Name
- EC - EC Motor
- 125 = Diameter size (mm)

ACCESSORIES (Pages 238-248) - CONTROLLERS (Pages 249-297)

The range of accessories include duct clamps, filters, guards, dampers, silencers, mounting brackets, shutters. A quick reference guide is shown below.


CFC


BDS


FLS


BDER


CIG

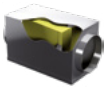
CFB


iFan
*fitted as standard

PERFORMANCE AND ELECTRICAL DATA

220-240V/50HZ/1ϕ & 380-420V/50HZ/3ϕ

PERFORMANCE TABLE

Product Code	m³/s @ Pa (Static)																	
	0	50	100	150	200	250	300	350	400	450	500	550	600	650	700	750	800	850
DAISHO EC 125	**0.12**	**0.11**	**0.11**	**0.1**	**0.09**	**0.08**	**0.07**	**0.06**	**0.05**	**0.04**	**0.03**	**0.01**						
DAISHO EC 150	**0.14**	**0.13**	**0.12**	**0.11**	**0.1**	**0.09**	**0.08**	**0.07**	**0.05**	**0.04**	**0.02**							
DAISHO EC 200	**0.23**	**0.21**	**0.18**	**0.16**	**0.13**	**0.11**	**0.08**	**0.06**	**0.03**	**0.01**								
DAISHO EC 250	**1.44**	**0.44**	**0.42**	**0.41**	**0.4**	**0.38**	**0.36**	**0.35**	**0.33**	**0.31**	**0.29**	**0.26**	**0.24**	**0.21**	**0.17**	**0.13**	**0.07**	
DAISHO EC 315	**0.7**	**0.68**	**0.65**	**0.63**	**0.6**	**0.57**	**0.55**	**0.52**	**0.49**	**0.46**	**0.43**	**0.39**	**0.36**	**0.32**	**0.28**	**0.24**	**0.2**	**0.15**
DAISHO EC 450	**1.44**	**1.37**	**1.29**	**1.21**	**1.12**	**1.03**	**0.92**	**0.8**	**0.67**	**0.49**	**0.23**							

Product Code	m³/s @ Pa (Static)												
	0	100	200	300	400	500	600	700	800	900	1000	1100	1200
DAISHO EC 450	**1.73**	**1.6**	**1.47**	**1.32**	**1.15**	**0.96**	**0.72**	**0.35**					
DAISHO EC 630	**2.47**	**2.36**	**2.26**	**2.17**	**2.07**	**1.98**	**1.88**	**1.77**	**1.65**	**1.52**	**1.37**	**1.16**	**0.8**
DAISHO EC 1000	**3.36**	**3.19**	**3.01**	**2.81**	**2.58**	**2.33**	**2.04**	**1.67**	**1.06**				

PRODUCT AND ELECTRICAL DETAILS

Product Code	Product Number	Voltage	Motor Frame	Electrical Supply	Electrical Current			Wiring Diagrams	Maximum Operating Temp°C	Breakout
					Motor (kW)	Full Load Current (A)	Starting Current (A)			Sound Level db(A) (3m)*
DAISHO EC 125	**EC012211**	**10**	**Integral**	**220-240 V/50 Hz/1 Ph**	**0.83**	**0.75**	**0.75**	**CD3009**	**60**	**<20**
DAISHO EC 150	**EC015211**	**10**	**Integral**	**220-240 V/50 Hz/1 Ph**	**0.83**	**0.75**	**0.75**	**CD3009**	**60**	**<20**
DAISHO EC 200	**EC020211**	**10**	**Integral**	**220-240 V/50 Hz/1 Ph**	**0.082**	**0.7**	**0.7**	**CD3009**	**60**	**<20**
DAISHO EC 250	**EC011120**	**10**	**Integral**	**220-240 V/50 Hz/1 Ph**	**0.54**	**3.39**	**3.39**	**CD3009**	**60**	**48**
DAISHO EC 315	**EC021120**	**10**	**Integral**	**220-240 V/50 Hz/1 Ph**	**0.505**	**3.1**	**3.1**	**CD3009**	**40**	**46**
DAISHO EC 450	**EC031120**	**10**	**Integral**	**220-240 V/50 Hz/1 Ph**	**0.64**	**2.9**	**2.9**	**CD3009**	**60**	**45**

Product Code	Product Number	Voltage	Motor Frame	Electrical Supply	Electrical Current			Wiring Diagrams	Maximum Operating Temp°C	Breakout
					Motor (kW)	Full Load Current (A)	Starting Current (A)			Sound Level db(A) (3m)*
DAISHO EC 450	**EC043120**	**10**	**Integral**	**380-420 V/50 Hz/3 Ph**	**1.01**	**1.6**	**1.6**	**CD3010**	**60**	**50**
DAISHO EC 630	**EC053120**	**10**	**Integral**	**380-420 V/50 Hz/3 Ph**	**2.8**	**4.35**	**4.35**	**CD3010**	**40**	**56**
DAISHO EC 1000	**EC063120**	**10**	**Integral**	**380-420 V/50 Hz/3 Ph**	**2.9**	**4.65**	**4.65**	**CD3010**	**40**	**56**

*Sound power levels are average dBA at 3 metres distance over sphere, under free field conditions and are presented for comparative purposes only. Values shown are those at the mid-point of the performance curve. For ErP efficiency ratings and grades please refer to our Fan Selector for more information.

Products in **bold** are available from our UK Distributors on next day delivery, if ordered by 4pm. Please call to confirm availability on 01206 222 580.

DRAWINGS AND DIMENSIONS

DAISHO EC - 125, 150, 200, 250, 315 AND 450

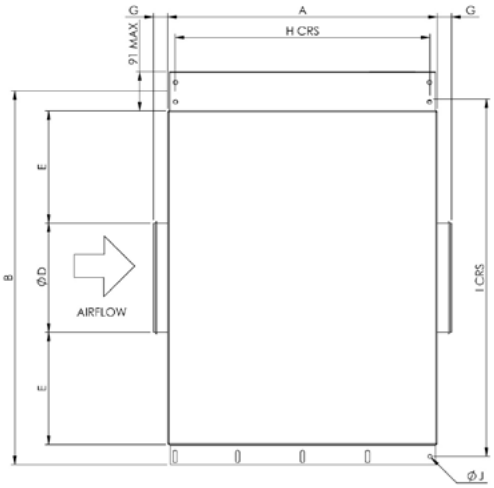

Plan View

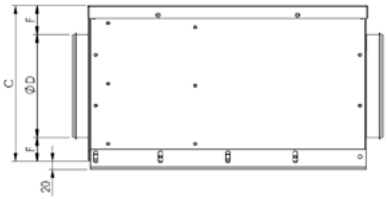

Side View

Size	A	B	C	ØD	E	F1	F2	G	H CRS	I CRS	ØJ	Weight (kg)
DAISHO EC 125	412	626	280	125	250	72	80	40	380	610	10	20
DAISHO EC 150	412	626	280	150	238	62	69	40	380	610	10	20
DAISHO EC 200	492	710	325	200	220	49	63	40	460	692	10	25
DAISHO EC 250	614	870	384	250	260	-	67	40	588	833	9	51
DAISHO EC 315	734	960	440	315	272.5	-	62.5	40	708	923	9	65
DAISHO EC 450	1054	1306	615	450	381.6	-	82.5	65	1028	1269	9	134

All dimensions shown in mm

Products in **bold** are available from our UK Distributors on next day delivery, if ordered by 4pm. Please call to confirm availability on 01206 222 580.

DRAWINGS AND DIMENSIONS

DAISHO EC - 630

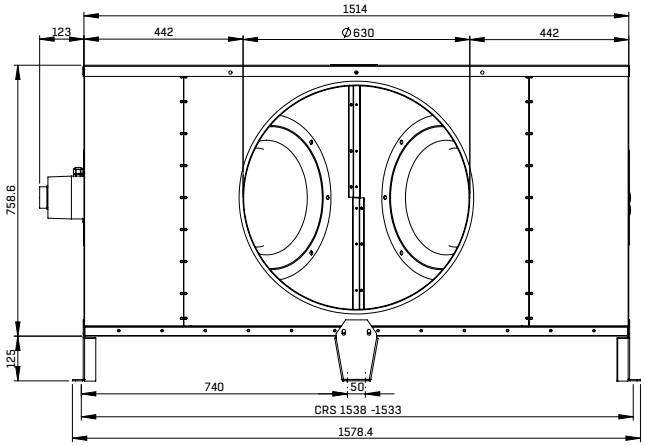

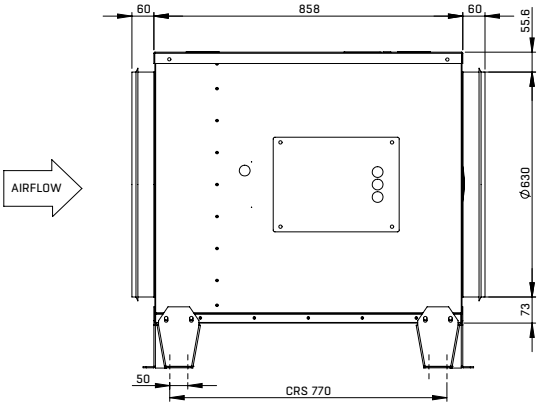

Weight - 206 kg

DAISHO EC - 1000

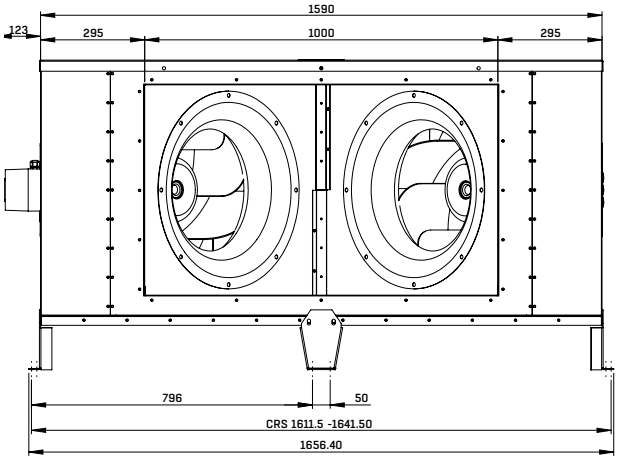

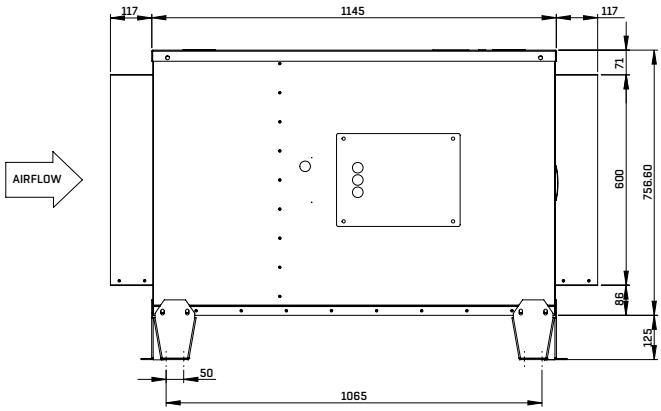

Weight - 221 kg

Note: Rectangular spigot

All dimensions shown in mm

PERFORMANCE CHARTS

DAISHO EC - 125 - EC012211

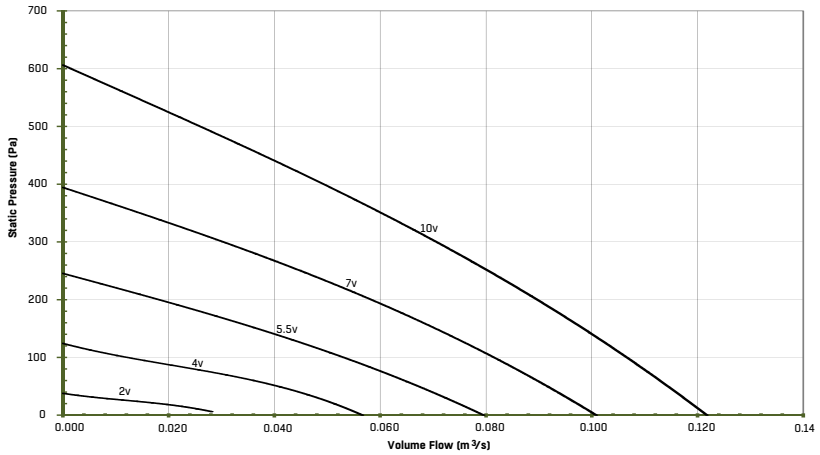

DAISHO EC - 150 - EC015211

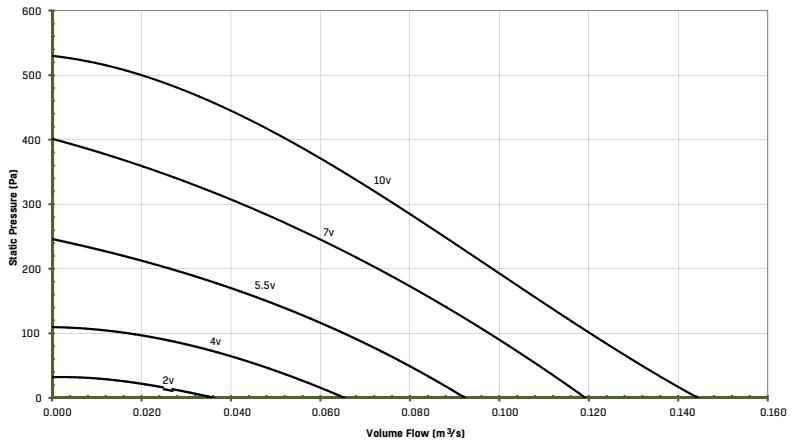

DAISHO EC - 200 - EC020211

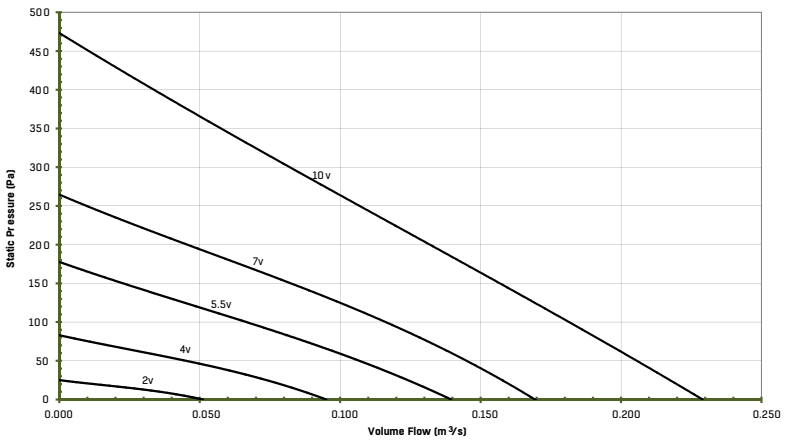

PERFORMANCE CHARTS

DAISHO EC - 250 - EC011120

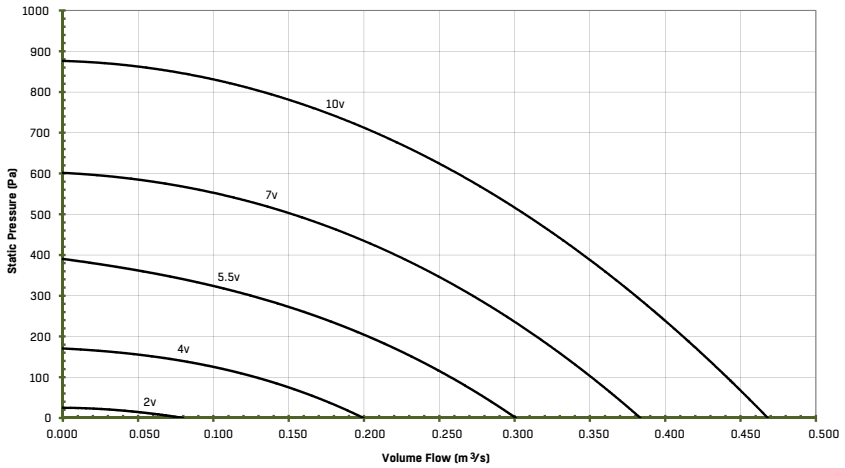

DAISHO EC - 315 - EC021120

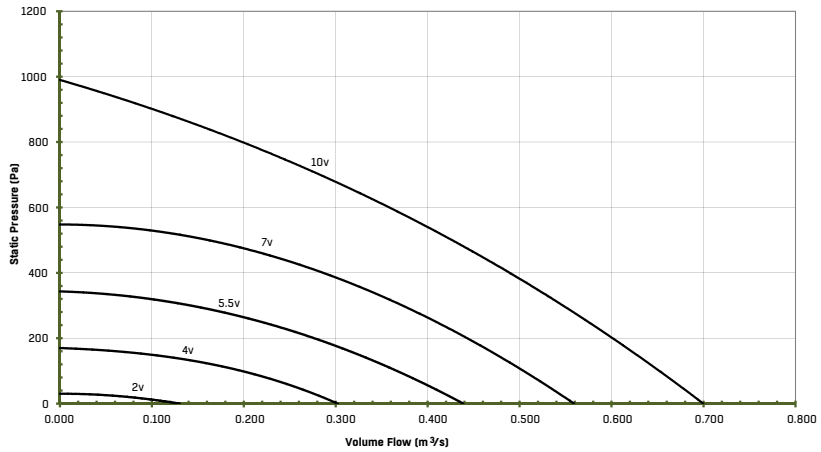

DAISHO EC - 450 (SINGLE PHASE) - EC031120

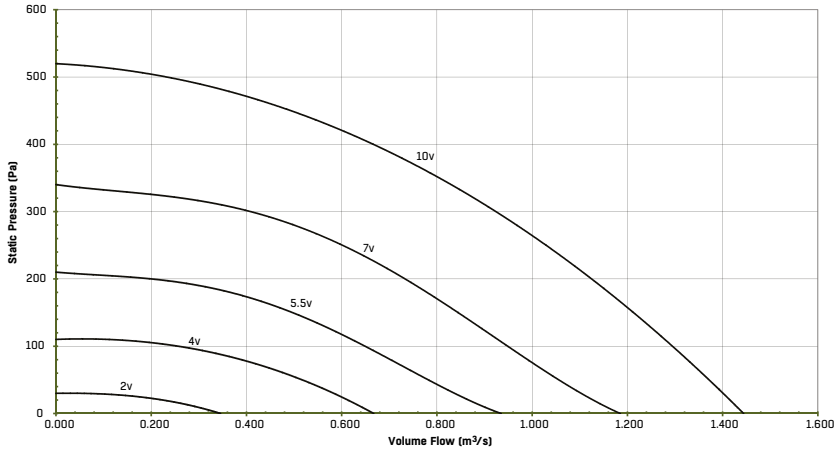

PERFORMANCE CHARTS

DAISHO EC - 450 (THREE PHASE) - EC043120

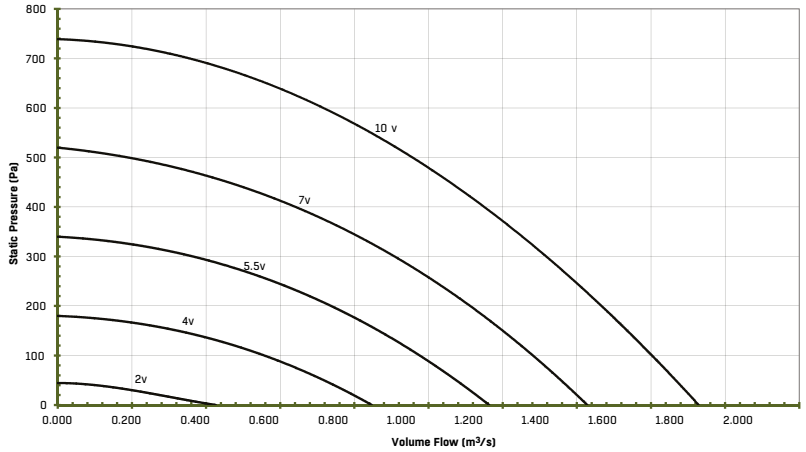

DAISHO EC - 630 (THREE PHASE) - EC053120

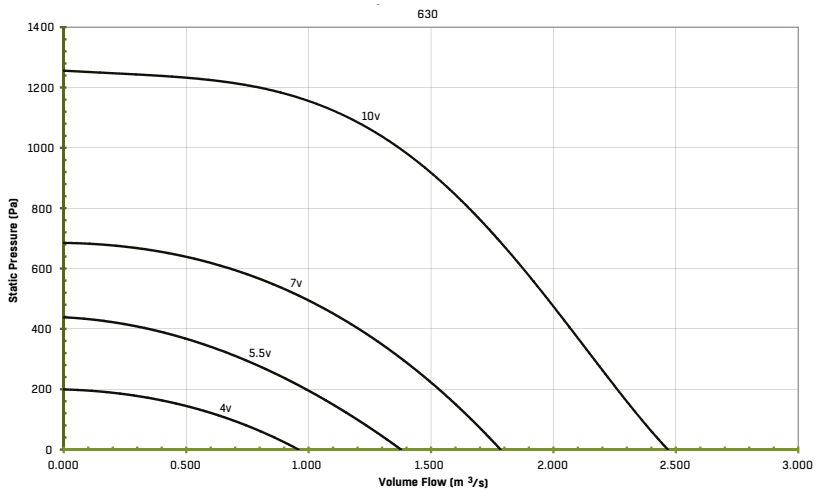

DAISHO EC - 1000 (THREE PHASE) - EC063120

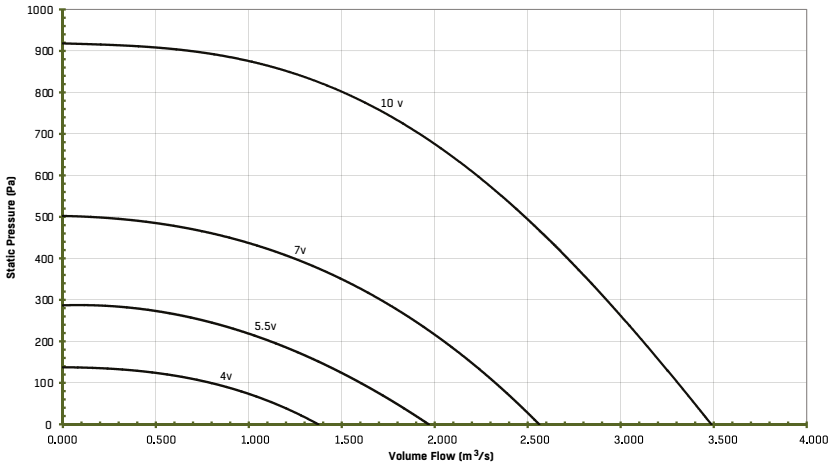

WIRING DIAGRAMS - DAISHO EC

1PH DAISHO EC (SIZES 125, 150, 200, 250, 315 AND 450)

CD3009

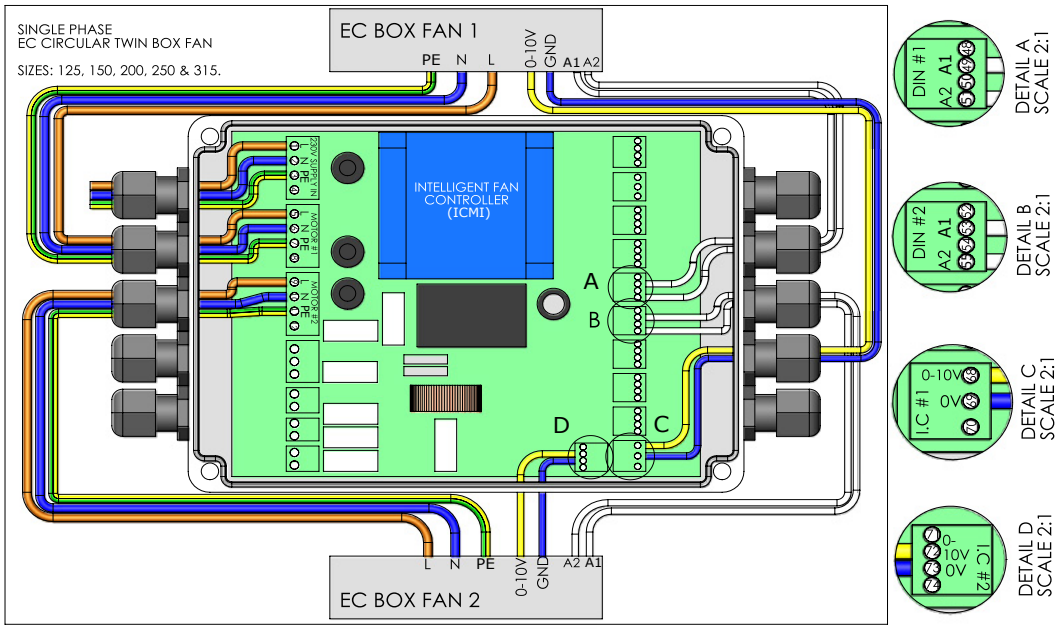

3PH DAISHO EC (SIZES 450, 630 AND 1000)

CD3010

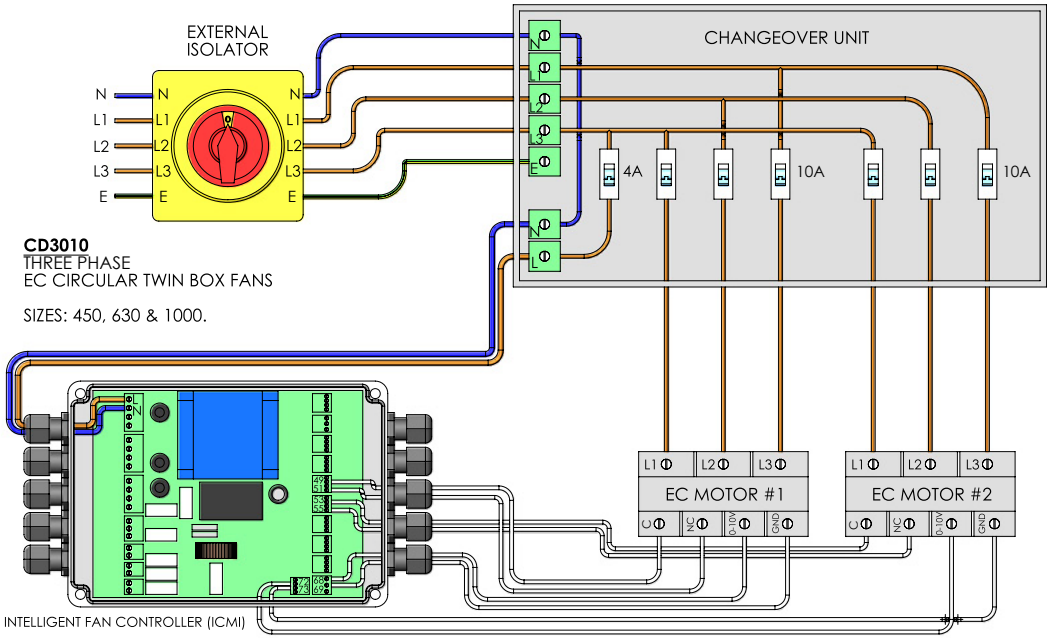

PLASTIC TUBE FANS
ESPADA

PRODUCT FACTS

- Air flow up to 0.35 m^3/s
- Static pressures up to 580 Pa
- Plastic cased centrifugal fan
- Low noise levels
- Corrosion resistant design
- Easy electrical connection via terminal box
- Backward curved impeller
- Suitable for mounting in all orientations

ELECTRICAL SUPPLY

220-240V/50Hz/1ϕ

TEMPERATURE RANGE

Up to 70ºC depending on size, see electrical data table on next page for more information.

SIZES

100, 125, 150, 160, 200, 250 & 315 mm

FEATURES AND CONSTRUCTION

Casings of sizes 100 - 315 are manufactured from an impact and flammable resistant plastic and feature an integrated IP44 rated terminal box and guide vanes. Fan impellers, for diameters up to and including 250mm, are manufactured from plastic, while the 315mm size is manufactured from galvanised steel.

INSTALLATION

Rigid folded spiral-seam ducts (Spiro), flexible aluminium or plastic ducts with standardised diameter can be used.

WIRING

Insulation class F with additional moisture protection impregnation and thermal contacts which are connected in series with the windings of the motor.

SPEED CONTROLLERS

Speed is 100% infinitely variable using auto transformers or electronic control.

PRODUCT CODE

ESPADA 100 (L)

- ESPADA = Product Name
- 100 = Diameter size (mm)
- L = (Motor option/variant)

ACCESSORIES (Pages 238-248) - CONTROLLERS (Pages 249-297)

The range of accessories include duct clamps, filters, guards, dampers, silencers, mounting brackets, shutters. A quick reference guide is shown below.


CFC


BDS


FLS


BDER


MB

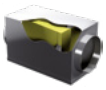
CFB


CIG


Controls Electric

PERFORMANCE & ELECTRICAL DATA

220-240V/50HZ/1ϕ

PERFORMANCE TABLE

Product Code	m³/s @ Pa (Static)										
	0	50	100	150	200	250	300	350	400	450	500
ESPADA 100L	**0.08**	**0.06**	**0.05**	**0.03**	**0.02**						
ESPADA 125L	**0.11**	**0.1**	**0.08**	**0.07**	**0.05**	**0.03**					
ESPADA 150	**0.15**	**0.14**	**0.12**	**0.1**	**0.08**	**0.05**	**0.02**				
ESPADA 160	**0.15**	**0.13**	**0.11**	**0.09**	**0.07**	**0.04**	**0.01**				
ESPADA 200	**0.26**	**0.24**	**0.22**	**0.18**	**0.15**	**0.12**	**0.09**	**0.06**	**0.03**		
ESPADA 250	**0.28**	**0.25**	**0.22**	**0.19**	**0.15**	**0.12**	**0.09**	**0.06**	**0.02**		
ESPADA - 315L	**0.34**	**0.32**	**0.3**	**0.28**	**0.26**	**0.23**	**0.21**	**0.18**	**0.15**	**0.12**	**0.07**

PRODUCT AND ELECTRICAL DETAILS

Product Code	Product Number	Speed rpm	Motor Frame	IP Rating	Electrical Current			Wiring Diagrams	**Speed Controllers	Maximum Operating Temp°C	Breakout
					Motor (kW)	Full Load Current (A)	Starting Current (A)		Electronic		*Sound Level db(A) (3m)
ESPADA 100L	**TF100023**	**2125**	**Integral**	**IP44**	**0.029**	**0.13**	**0.13**	**CD3004**	**EEID 1.5**	**70**	**35**
ESPADA 125L	**TF125024**	**2415**	**Integral**	**IP44**	**0.06**	**0.3**	**0.4**	**CD3004**	**EEID 1.5**	**70**	**31**
ESPADA 150	**TF150023**	**2400**	**Integral**	**IP44**	**0.07**	**0.3**	**0.45**	**CD3004**	**EEID 1.5**	**70**	**30**
ESPADA 160	**TF160023**	**2400**	**Integral**	**IP44**	**0.07**	**0.45**	**0.68**	**CD3004**	**EEID 1.5**	**70**	**30**
ESPADA 200	**TF200024**	**2540**	**Integral**	**IP44**	**0.115**	**0.5**	**0.8**	**CD3004**	**EEID 1.5**	**50**	**32**
ESPADA 250	**TF250024**	**2560**	**Integral**	**IP44**	**0.115**	**0.5**	**0.8**	**CD3004**	**EEID 1.5**	**50**	**32**
ESPADA - 315L	**TF315023**	**2390**	**Integral**	**IP44**	**0.2**	**0.89**	**2.04**	**CD3004**	**EEID 1.5**	**70**	**33**

DRAWING AND DIMENSIONS

Product Code	A	B	C	D	E	F	Weight (Kg)
ESPADA 100L	160	220	100	30	97.6	245	2.4
ESPADA 125L	160	220	124	30	97.5	245	2.4
ESPADA 150	170	230	149	30	135.7	340.5	3
ESPADA 160	170	230	159	30	135.7	340.5	3
ESPADA 200	170	230	199	30	135.7	340.5	3.4
ESPADA 250	170	230	249	30	135.7	340.5	3.4
ESPADA - 315L	215	275	314	30	160.7	405	5.8

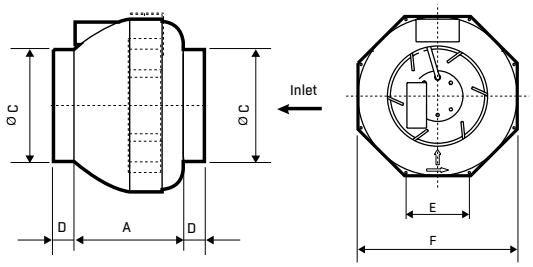

For ErP efficiency ratings and grades please refer to our Fan Selector for more information. *Sound power levels are average dBA at 3 metres distance over sphere, under free field conditions and are presented for comparative purposes only. Values shown are those at the mid-point of the performance curve.

All dimensions in mm.

Products in **bold** are available from our UK Distributors on next day delivery, if ordered by 4pm. Please call to confirm availability on 01206 222 580.

PERFORMANCE CHART

ESPADA - 100L - TF100023

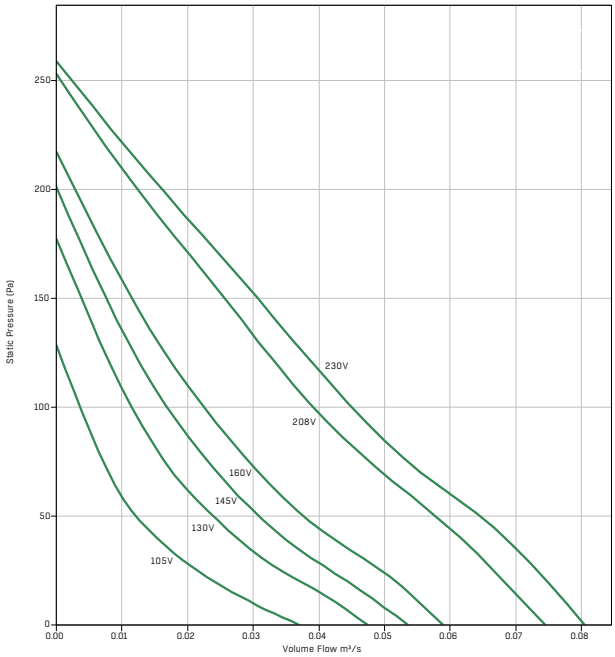

ESPADA - 125L - TF125024

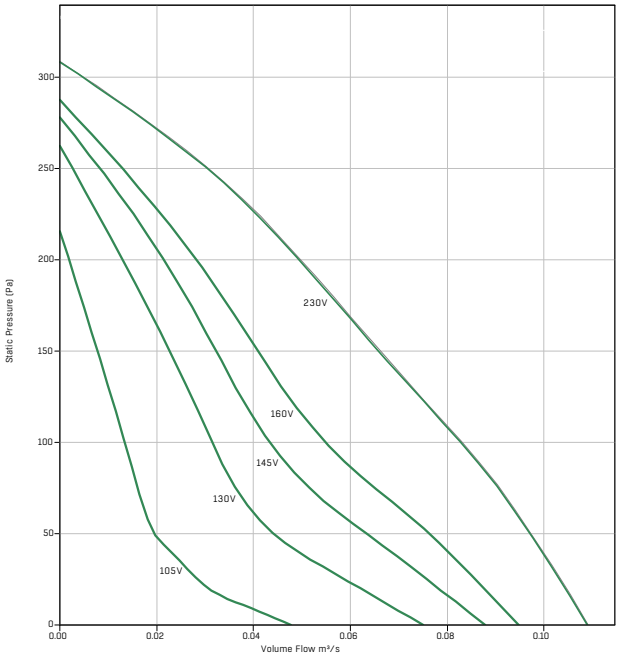

ESPADA - 150 - TF150023

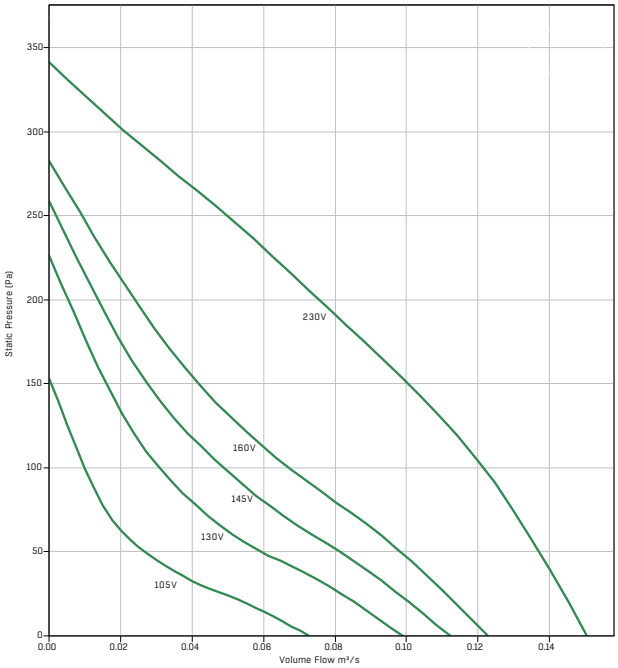

ESPADA - 160 - TF160023

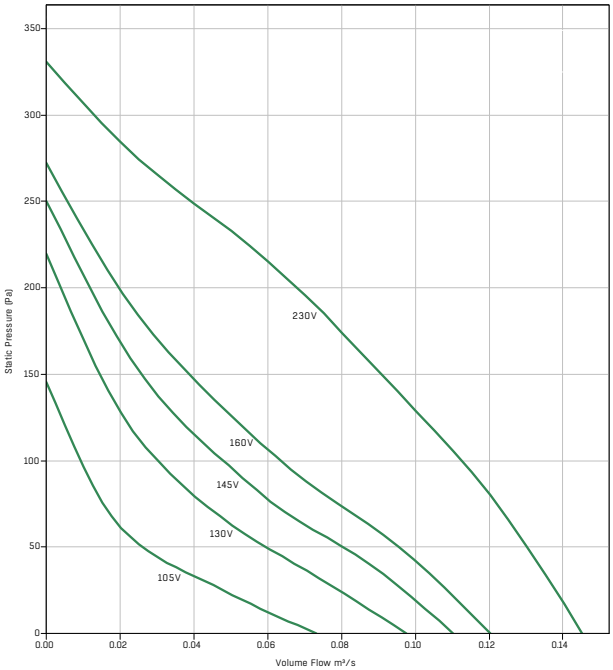

PERFORMANCE CHART

ESPADA - 200 - TF200024

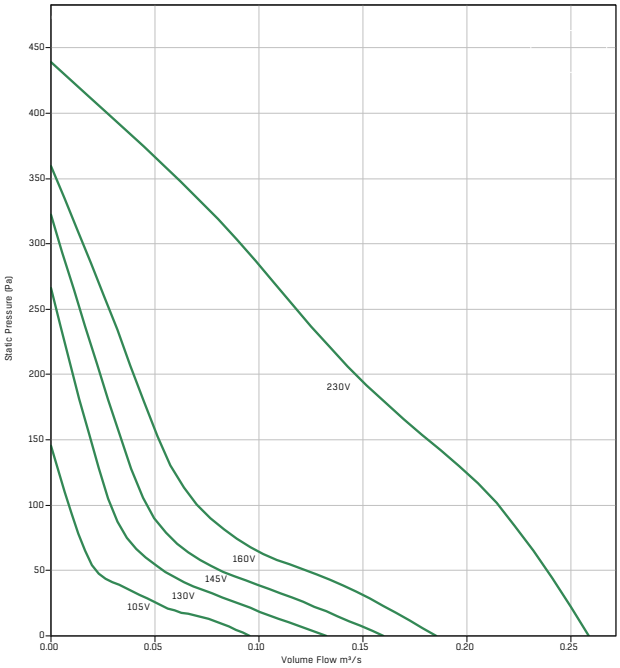

ESPADA - 250 - TF250024

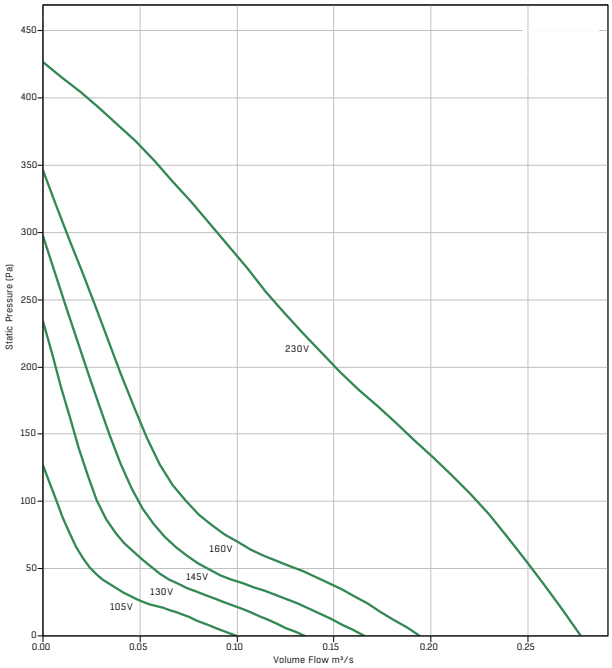

ESPADA - 315L - TF315023

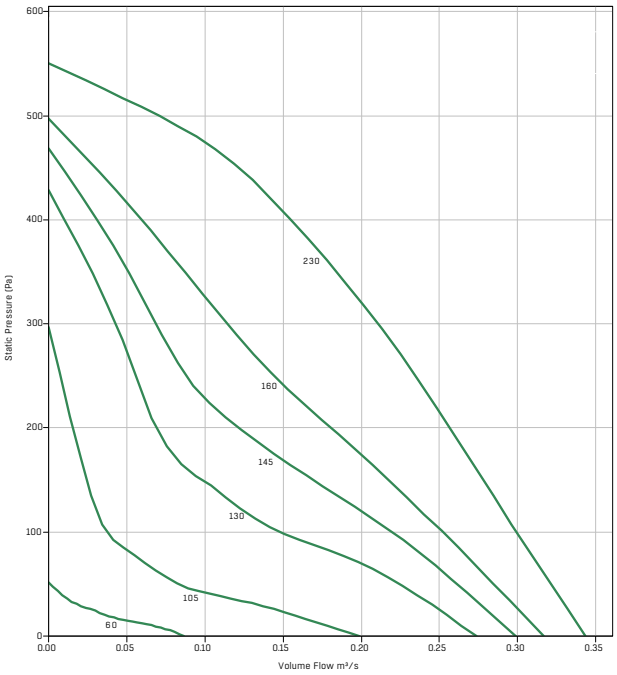

WIRING DIAGRAM - ESPADA

CD3004

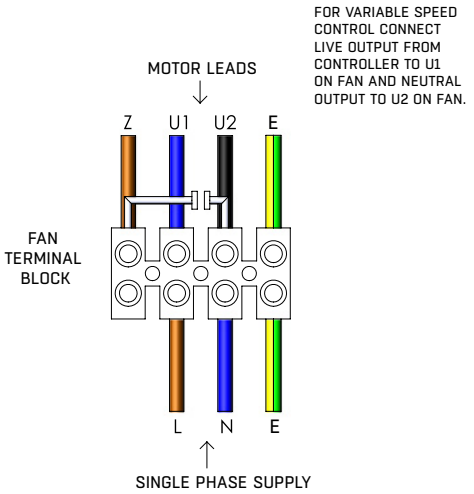

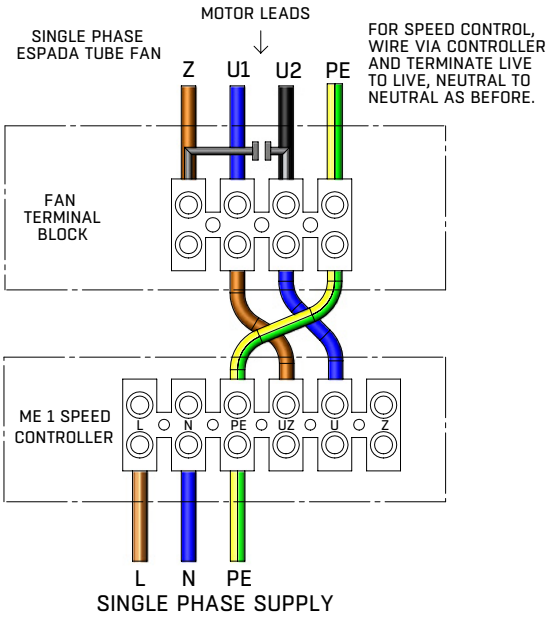

NOTES

METAL TUBE FANS
ROPERA

PRODUCT FACTS

- Air flow up to 0.37 m^3/s
- Static pressures up to 600 Pa
- Casing - galvanized sheet steel
- Backward curved impeller
- Easy electrical connection via terminal box
- Insulation class F
- Motor protection by thermal contacts
- Suitable for mounting in all positions

ELECTRICAL SUPPLY

220-240V/50Hz/1ϕ

TEMPERATURE RANGE

Up to 70°C depending on size, see electrical data table on next page for more information.

SIZES

100, 125, 150, 160, 200, 250 & 315 mm

FEATURES AND CONSTRUCTION

Casings are manufactured from galvanized sheet steel. Each centrifugal impeller is driven by an external rotor motor, which has an IP44/54 protection class.

INSTALLATION

Rigid folded spiral-seam ducts (Spiro), flexible aluminium or plastic ducts with standardised diameter can be same or plastic.

WIRING

Insulation class F with additional moisture impregnation protection and thermal contacts which are connected in series with the windings of the motor.

SPEED CONTROLLERS

Speed is 100% infinitely variable using auto transformers or electronic control.

PRODUCT CODE

ROPERA 100 (L)

ROPERA = Product Name

- 100 = Diameter size (mm)
- L = (Motor option/variant)

ACCESSORIES (Pages 238-248) - CONTROLLERS (Pages 249-297)

The range of accessories include duct clamps, filters, guards, dampers, silencers, mounting brackets, shutters. A quick reference guide is shown below.


CFC


BDS


FLS


BDER


MF

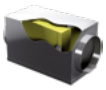
CFB


CIG


Controls Electric

PERFORMANCE & ELECTRICAL DATA

220-240V/50HZ/1ϕ

PERFORMANCE TABLE

Product Code	m³/s @ Pa (Static)											
	0	50	100	150	200	250	300	350	400	450	500	550
ROPERA 100	**0.05**	**0.03**	**0.02**									
ROPERA 125	**0.07**	**0.05**	**0.03**	**0.01**								
ROPERA 150L	**0.14**	**0.12**	**0.11**	**0.09**	**0.07**	**0.04**	**0.02**					
ROPERA 160L	**0.24**	**0.22**	**0.19**	**0.16**	**0.13**	**0.1**	**0.08**	**0.05**				
ROPERA 200	**0.22**	**0.2**	**0.18**	**0.16**	**0.13**	**0.11**	**0.08**	**0.06**	**0.03**			
ROPERA 250L.3DF	**0.26**	**0.24**	**0.22**	**0.2**	**0.17**	**0.15**	**0.11**	**0.08**	**0.04**			
ROPERA 315 M.3EF	**0.37**	**0.35**	**0.33**	**0.32**	**0.29**	**0.27**	**0.25**	**0.22**	**0.19**	**0.15**	**0.09**	**0.03**

PRODUCT AND ELECTRICAL DETAILS

Product Code	Product Number	Speed rpm	Motor Frame	IP Rating	Electrical Current			Wiring Diagrams	**Speed Controllers	Maximum Operating Temp°C	Breakout
					Motor (kW)	Full Load Current (A)	Starting Current (A)		Electronic		*Sound Level db(A) (3m)
ROPERA 100	**TF100010**	**2470**	**Integral**	**IP44**	**0.028**	**0.1**	**1.9A**	**CD3004**	**EEID 1.5**	**70**	**18**
ROPERA 125	**TF125010**	**2480**	**Integral**	**IP44**	**0.028**	**0.1**	**2.0A**	**CD3004**	**EEID 1.5**	**70**	**19**
ROPERA 150L	**TF150015**	**2520**	**Integral**	**IP44**	**0.11**	**0.47**	**0.71**	**CD3004**	**EEID 1.5**	**60**	**33**
ROPERA 160L	**TF160015**	**2500**	**Integral**	**IP44**	**0.11**	**0.47**	**0.71**	**CD3004**	**EEID 1.5**	**60**	**32**
ROPERA 200	**TF200015**	**2410**	**Integral**	**IP44**	**0.12**	**0.5**	**0.75**	**CD3004**	**EEID 1.5**	**70**	**31**
ROPERA 250L.3DF	**TF250013**	**2470**	**Integral**	**IP44**	**0.165**	**0.53**	**0.9**	**CD3004**	**EEID 1.5**	**70**	**31**
ROPERA 315 M.3EF	**TF315014**	**2440**	**Integral**	**IP44**	**0.2**	**0.9**	**2.2**	**CD3004**	**EEID 1.5**	**70**	**33**

DRAWING AND DIMENSIONS

Product Code	A	B	C	D	E	F	Weight Kg
ROPERA 100	136	186	242	100	25	25	2.6
ROPERA 125	140	190	242	125	25	25	2.6
ROPERA 150L	140	190	341	150	25	25	3.7
ROPERA 160L	195	245	341	160	25	25	3.4
ROPERA 200	180	230	341	200	25	25	3.7
ROPERA 250L.3DF	180	230	341	250	30	30	5.5
ROPERA 315 M.3EF	195	255	402	315	30	30	5.8

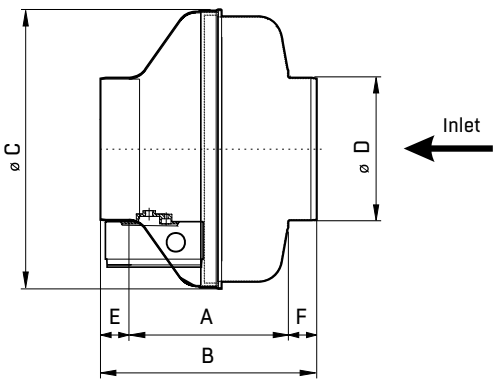

*Sound power levels are average dBA at 3 metres distance over sphere, under free field conditions and are presented for comparative purposes only. Values shown are those at the mid-point of the performance curve.

For ErP efficiency ratings and grades please refer to our Fan Selector for more information.

Products in **bold** are available from our UK Distributors on next day delivery, if ordered by 4pm. Please call to confirm availability on 01206 222 580.

PERFORMANCE CHART

ROPERA - 100 - TF100010

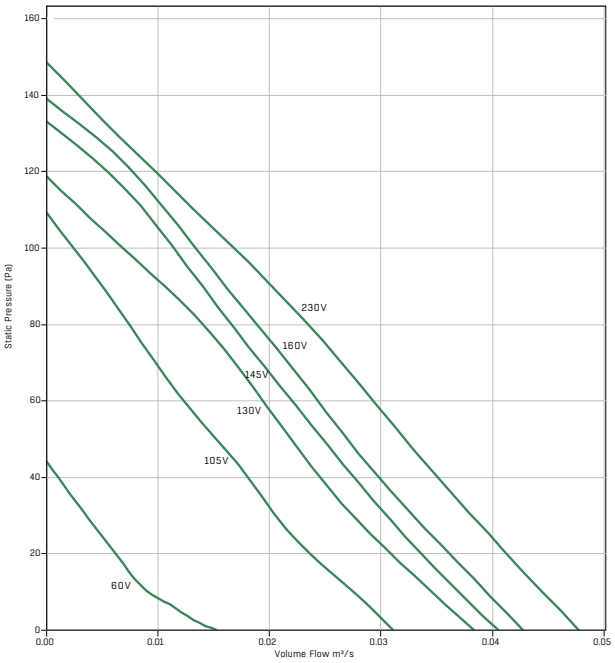

ROPERA - 125 - TF125010

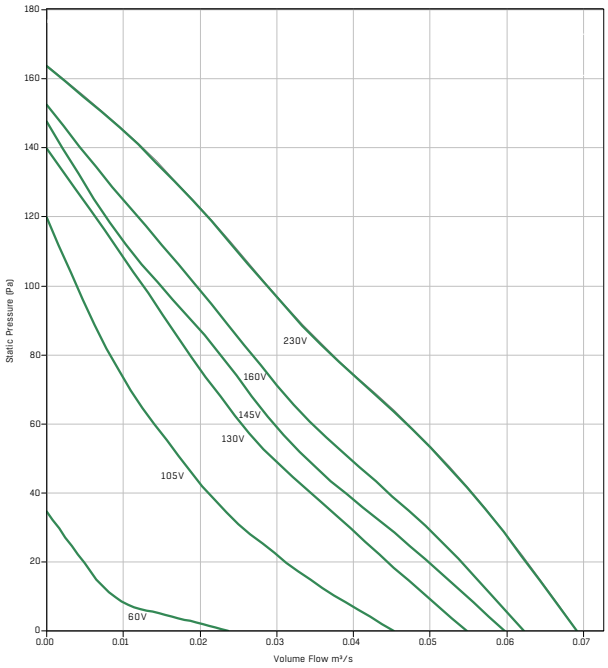

ROPERA - 150L - TF150015

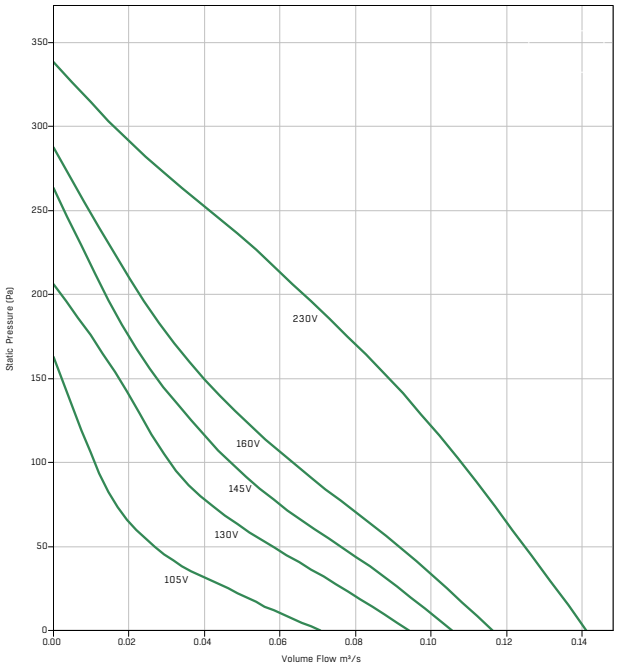

ROPERA - 160L - TF160015

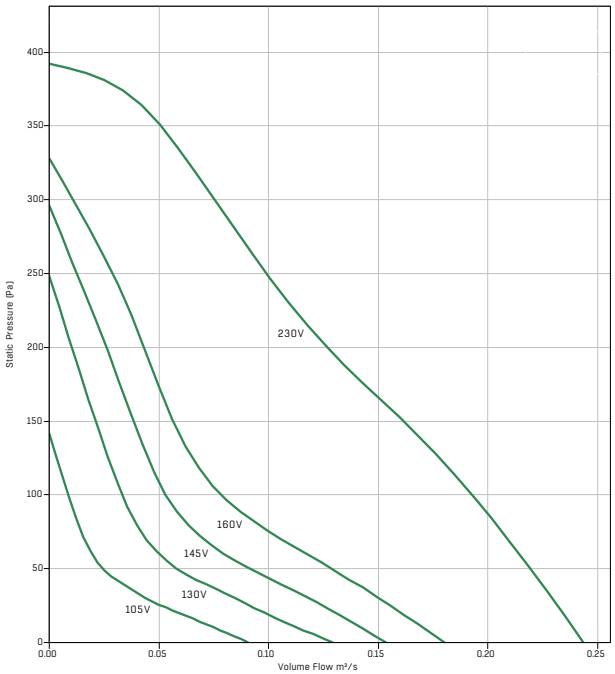

PERFORMANCE CHARTS

ROPERA - 200 - TF200015

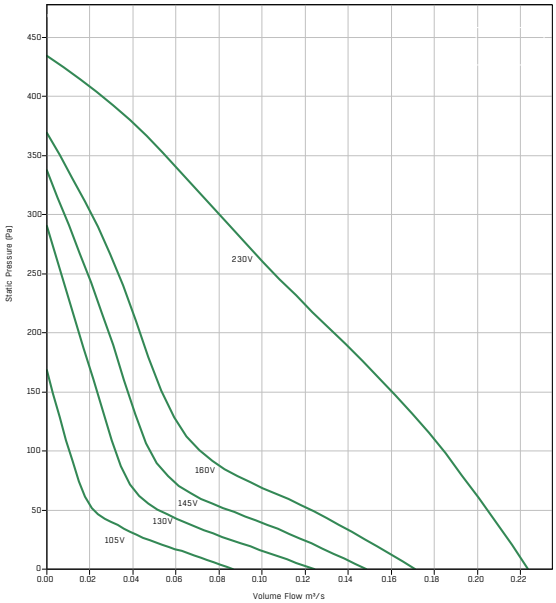

ROPERA - 250L.3DF - TF250013

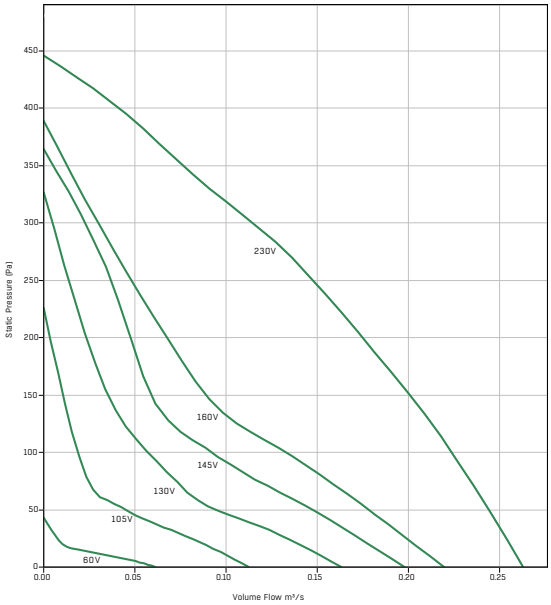

ROPERA - 315 M.3EF - TF315014

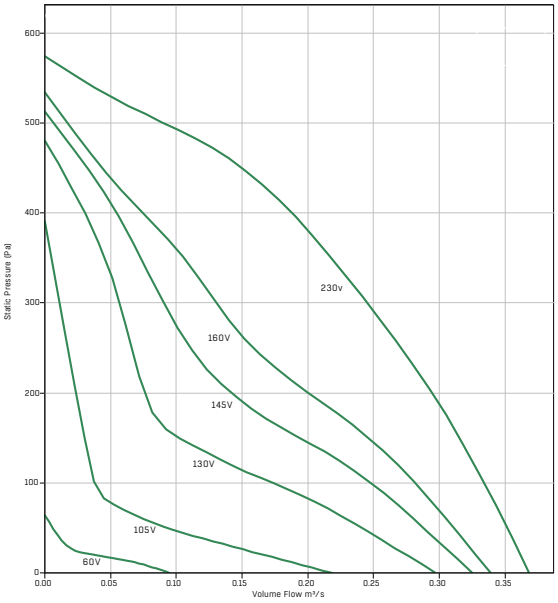

WIRING DIAGRAM - ROPERA

CD3004

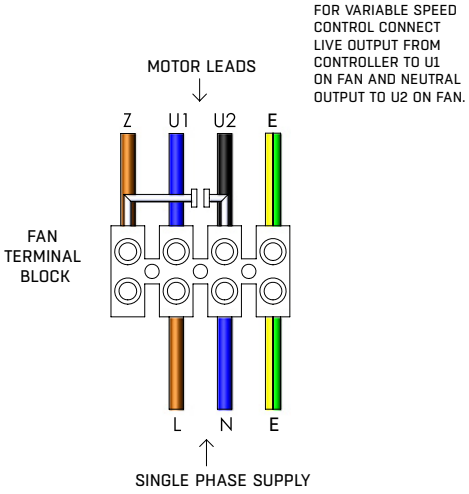

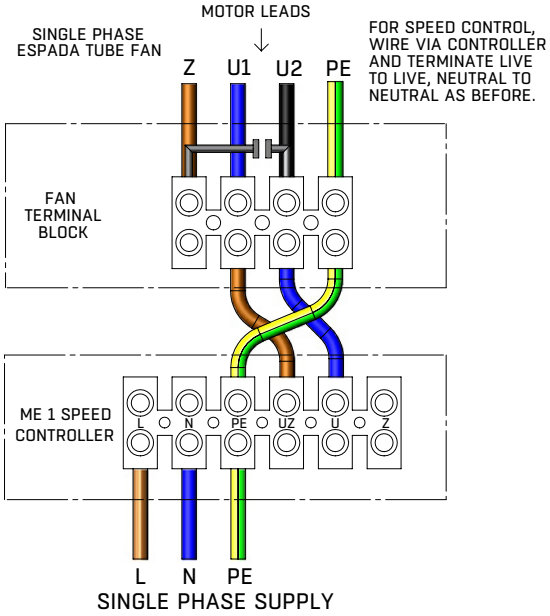

ULTRASOUND *by* FLÄKTGROUP

GAME-CHANGING VAV WITH ULTRASOUND

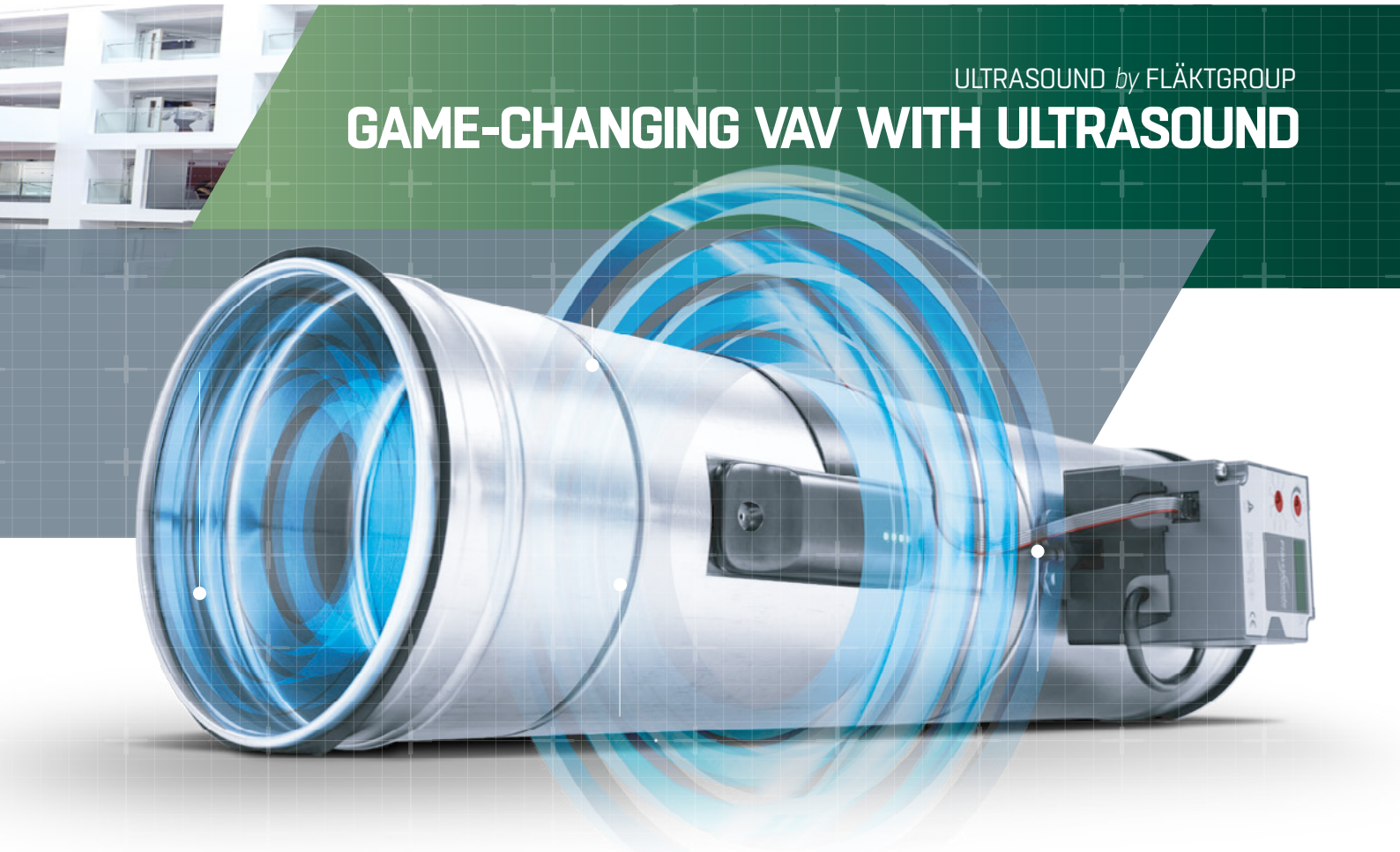

With advanced airflow analysis based on ultrasound technology* we now present a new dawn for Demand Controlled Ventilation. A landmark innovation setting aside traditional challenges for VAV Dampers: Noise, dust, reliability and pressure drops. With Optivent® Ultra we offer a unique solution, leading to simplified commissioning and installation, lowered life cycle costs and unprecedented levels of comfort.

UltraSound Technology
by FläktGroup

OPTIVENT® ULTRA BENEFITS

** Patented technology by FläktGroup*

LOW NOISE

A well-balanced system with no physical probe to cause turbulence and noise.

GOOD INDOOR AIR QUALITY

No pressure drop and a broad manageable airflow range means high comfort in the whole of the building and in every situation.

FLEXIBILITY

The Optivent® Ultra VAV requires no safety distance to bends and T-pieces, making installation easy where space is limited. With 'same-as-Duct' dimensions, system design and installation meet high flexibility.

ACCURATE & VERSATILE

With high accuracy in the whole airflow range and excellent resilience to dust, the Optivent® Ultra VAV works well also in more challenging environments such as classrooms and patient wards.

ENERGY EFFICIENT

Zero pressure drop and high accuracy regardless of airflow rate means no wasted energy for unnecessary Fan drive and excess airflow.

MAINTENANCE FREE

Maintenance-free because construction and materials are not subject to wear and tear.

Based on our e^3 solutions, we provide innovative and sustainable products to help you achieve or surpass your environmental targets whilst optimising your investment and life cycle cost.

See global website for international sales offices:
www.flaktwoods.com

FläktWoods
A FläktGroup Brand

METAL TUBE FANS
ROPERA EC

PRODUCT FACTS

- 100 mm to 355 mm diameter
- Air flow up to 0.56 m^3/s
- Static pressures up to 700 Pa
- Casing - galvanized sheet steel
- Backward curved impeller
- Easy electrical connection via terminal box
- Motor protection by thermal contacts

ELECTRICAL SUPPLY

220-240V/50Hz/1ϕ

TEMPERATURE RANGE

Up to 50°C depending on size, see electrical data table on next page for more information.

SIZES

100, 125, 150, 160, 200, 250, 315 & 355 mm

FEATURES AND CONSTRUCTION

EC (electronically controlled) motor. Casings are manufactured from galvanized sheet steel. Each centrifugal impeller is driven by an external rotor motor, which has an IP44 protection class.

INSTALLATION

Rigid folded spiral-seam ducts (Spiro), flexible aluminium or plastic ducts with standardised diameter can be same or plastic.

WIRING

Insulation class F with additional moisture impregnation protection and thermal contacts which are connected in series with the windings of the motor.

SPEED CONTROLLERS

Speed is 100% infinitely variable using auto transformers or electronic control.

PRODUCT CODE

ROPERA EC 100

- ROPERA = Product Name
- EC = EC Motor
- 100 = Diameter size (mm)

ACCESSORIES (Pages 238-248) - CONTROLLERS (Pages 249-297)

The range of accessories include duct clamps, filters, guards, dampers, silencers, mounting brackets, shutters. A quick reference guide is shown below.


CFC


BDS


FLS


BDER


MF

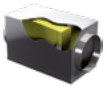
CFB


CIG


0-10V Potentiometer


iFan

PERFORMANCE, ELECTRICAL DATA & DRAWING

220-240V/50HZ/1ϕ

PERFORMANCE TABLE

Product Code	m³/s @ Pa (Static)													
	0	50	100	150	200	250	300	350	400	450	500	550	600	650
ROPERA EC 100	**0.13**	**0.12**	**0.12**	**0.11**	**0.1**	**0.09**	**0.09**	**0.08**	**0.07**	**0.06**	**0.04**	**0.02**		
ROPERA EC 125	**0.14**	**0.13**	**0.12**	**0.11**	**0.1**	**0.09**	**0.08**	**0.07**	**0.07**	**0.06**	**0.04**			
ROPERA EC 160	**0.21**	**0.2**	**0.19**	**0.18**	**0.17**	**0.16**	**0.15**	**0.14**	**0.12**	**0.11**	**0.09**	**0.06**		
ROPERA EC 200	**0.28**	**0.27**	**0.25**	**0.24**	**0.22**	**0.21**	**0.19**	**0.17**	**0.15**	**0.13**	**0.11**	**0.07**		
ROPERA EC 250	**0.35**	**0.32**	**0.3**	**0.27**	**0.24**	**0.22**	**0.19**	**0.17**	**0.15**	**0.13**	**0.11**	**0.05**		
ROPERA EC 315	**0.4**	**0.38**	**0.36**	**0.33**	**0.31**	**0.29**	**0.27**	**0.24**	**0.21**	**0.14**				
ROPERA EC 355	**0.65**	**0.61**	**0.57**	**0.53**	**0.49**	**0.43**	**0.36**	**0.27**						
ROPERA EC 355L	**0.79**	**0.74**	**0.69**	**0.63**	**0.58**	**0.53**	**0.47**	**0.41**	**0.36**	**0.32**	**0.28**	**0.23**	**0.17**	**0.08**

PRODUCT AND ELECTRICAL DETAILS

Product Code	Product Number	Speed rpm	Motor Frame	IP Rating	Electrical Current			Wiring Diagrams	**Speed Controllers	Maximum Operating Temp°C	Breakout
					Motor (kW)	Full Load Current (A)	Starting Current (A)		Potentio-meter		*Sound Level db(A) (3m)
ROPERA EC 100	**TF100041**	**4000**	**Integral**	**IP44**	**0.1**	**0.75**	**0.75**	**CD3026**	**SDPV**	**50**	**37**
ROPERA EC 125	**TF125041**	**3635**	**Integral**	**IP44**	**0.125**	**0.75**	**0.75**	**CD3026**	**SDPV**	**50**	**32**
ROPERA EC 160	**TF160040**	**3730**	**Integral**	**IP44**	**0.13**	**1**	**1**	**CD3026**	**SDPV**	**50**	**33**
ROPERA EC 200	**TF200040**	**3200**	**Integral**	**IP44**	**0.16**	**1.1**	**1.1**	**CD3026**	**SDPV**	**50**	**32**
ROPERA EC 250	**TF250040**	**2760**	**Integral**	**IP44**	**0.16**	**1.1**	**1.1**	**CD3026**	**SDPV**	**50**	**34**
ROPERA EC 315	**TF315040**	**2590**	**Integral**	**IP54**	**0.2**	**0.8**	**0.8**	**CD3026**	**SDPV**	**50**	**38**
ROPERA EC 355	**TF355042**	**1740**	**Integral**	**IP54**	**0.24**	**1.1**	**1.1**	**CD3026**	**SDPV**	**50**	**32**
ROPERA EC 355L	TF355043	2025	Integral	IP54	0.32	1.42	1.42	CD3026	SDPV	50	50

DRAWING AND DIMENSIONS

Product Code	A	B	C	D	E	F	Weight Kg
ROPERA EC 100	186	136	99	99	243	25	3.3
ROPERA EC 125	190	140	124	124	243	25	3.5
ROPERA EC 160	202	152	160	160	341	25	3.7
ROPERA EC 200	225	205	200	200	341	25	4.5
ROPERA EC 250	256	196	250	250	341	30	3.9
ROPERA EC 315	255	195	315	315	402	30	6.6
ROPERA EC 355	400	330	355	355	490	35	13.2
ROPERA EC 355L	400	330	355	355	490	35	13.2

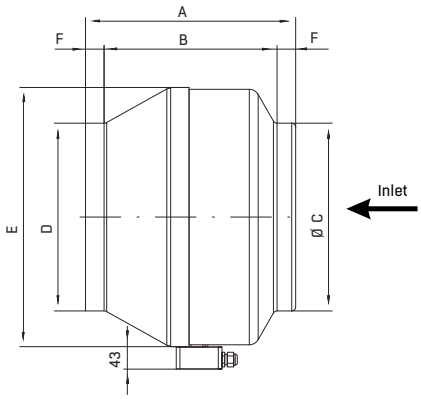

For ErP efficiency ratings and grades please refer to our Fan Selector for more information. *Sound power levels are average dBA at 3 metres distance over sphere, under free field conditions and are presented for comparative purposes only. Values shown are those at the mid-point of the performance curve.

Products in **bold** are available from our UK Distributors on next day delivery, if ordered by 4pm. Please call to confirm availability on 01206 222 580.

PERFORMANCE CHARTS

ROPERA EC - 100 - TF100041

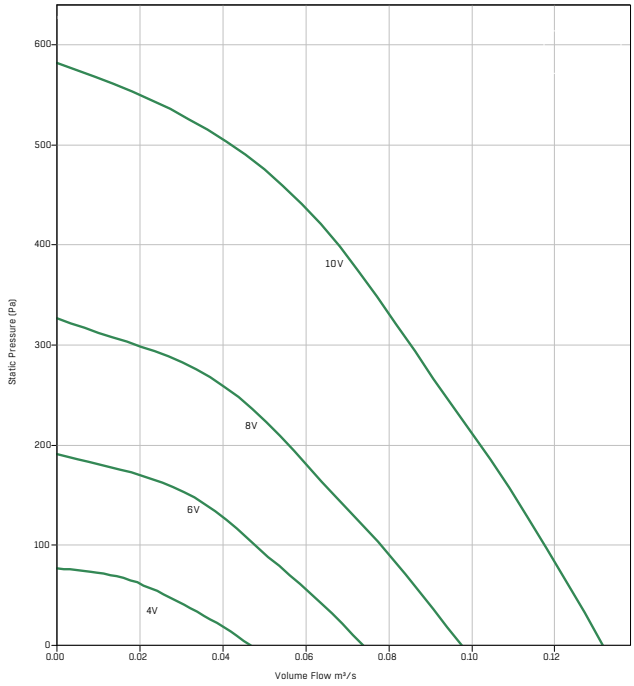

ROPERA EC - 125 - TF125041

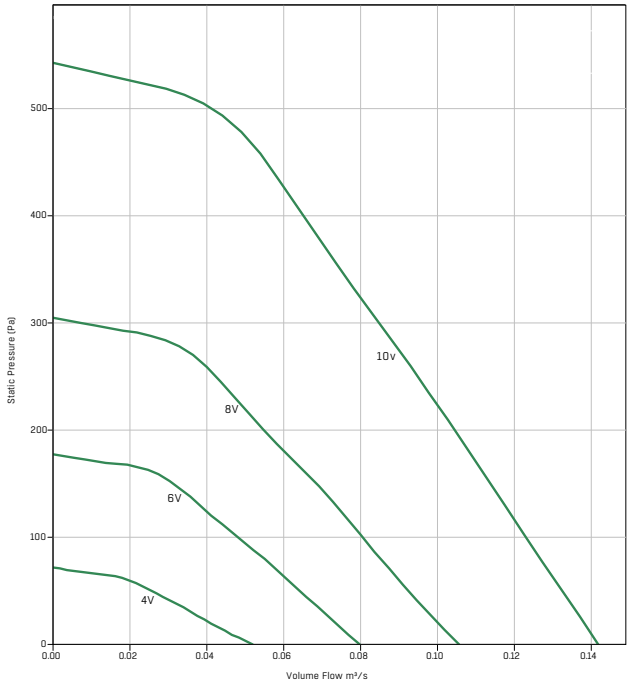

ROPERA EC - 160 - TF160040

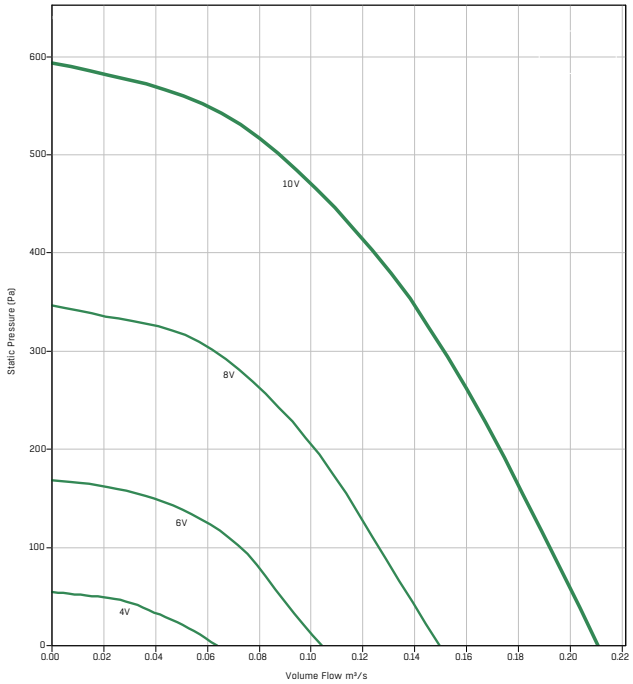

ROPERA EC - 200 - TF200040

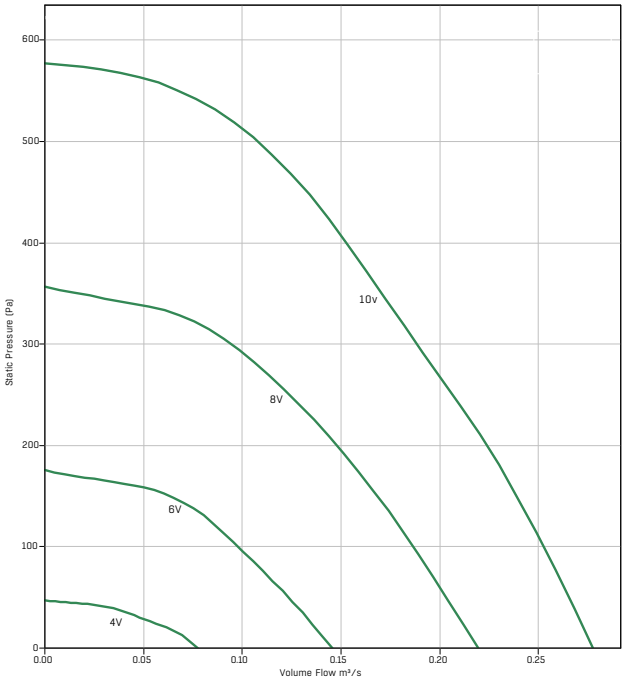

PERFORMANCE CHARTS

ROPERA EC - 250 - TF250040

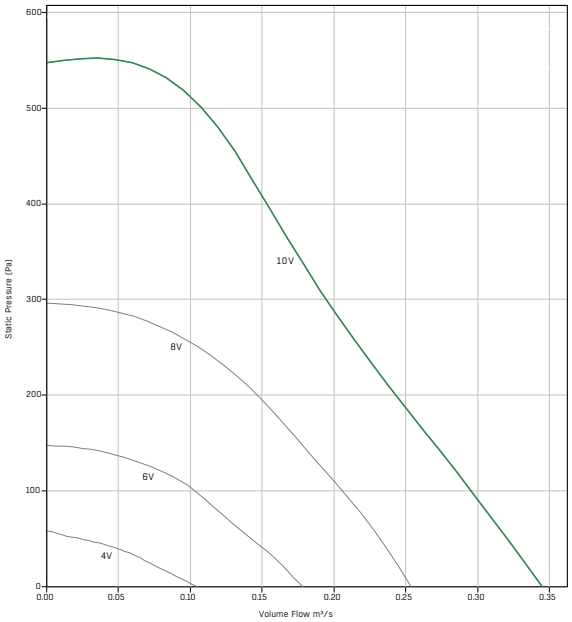

ROPERA EC - 315 - TF315040

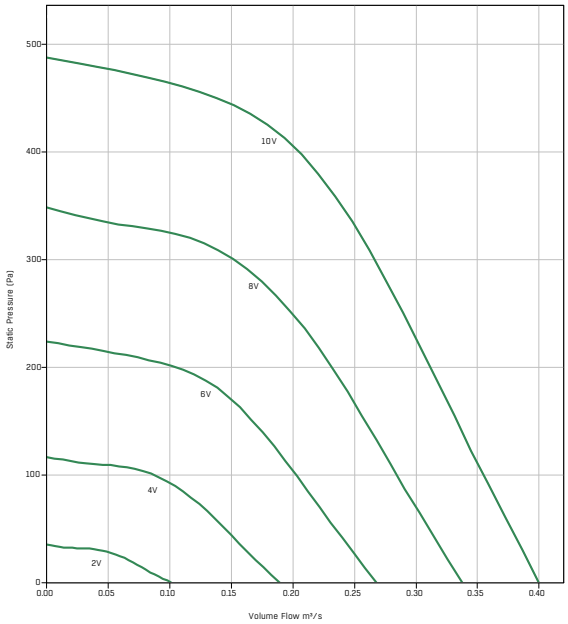

ROPERA EC - 355 - TF355042

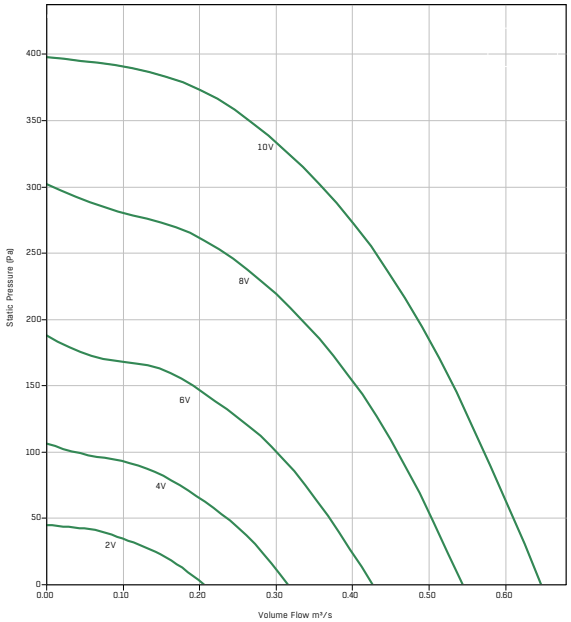

ROPERA EC - 355L - TF355043

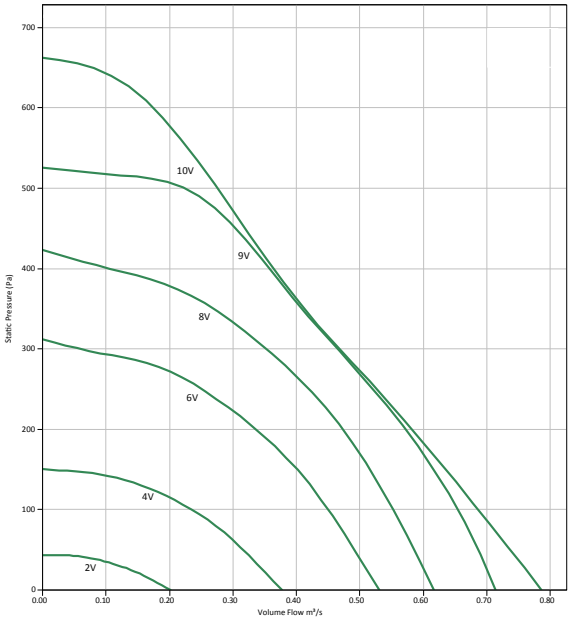

WIRING DIAGRAM - ROPERA EC

CD3026

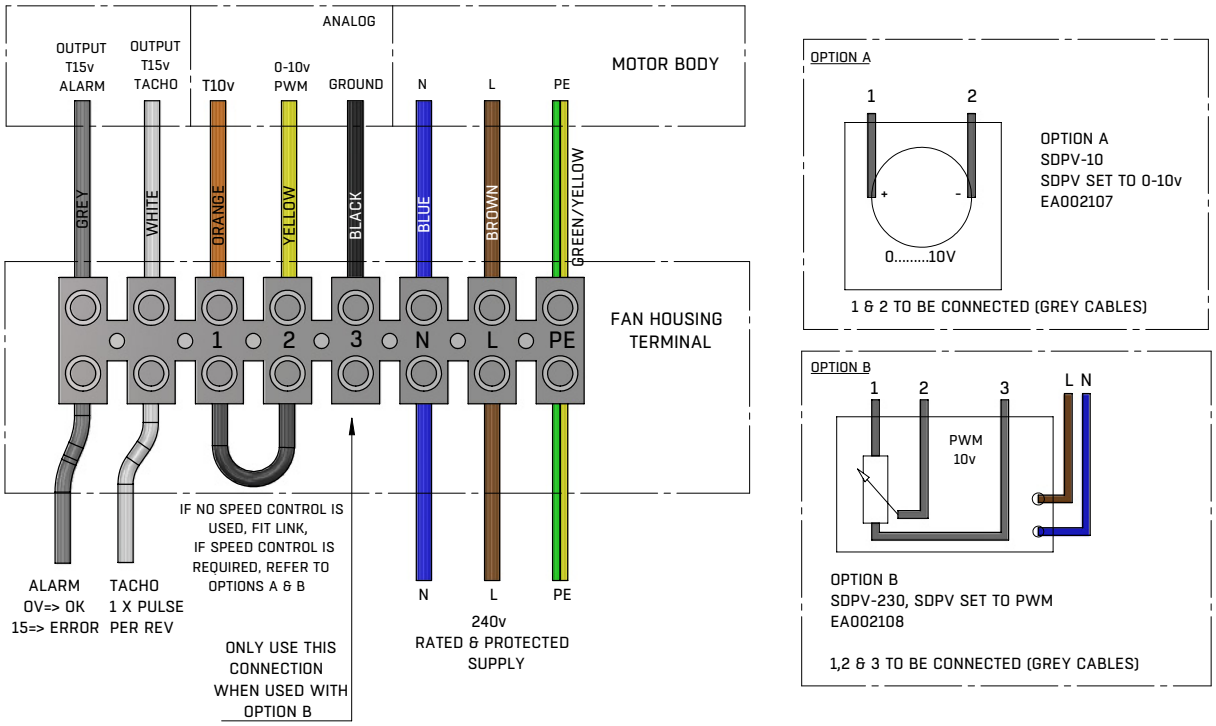

ROOF UNITS
STOF ROOF UNIT

PRODUCT FACTS

- Volume flows up to 4.7 m^3/s
- Static Pressures up to 950 Pa
- Both EC and AC versions available
- Low sound level
- High efficiency
- Speed controllable
- ErP 2015 compliant
- Bird Guard & Shutters included as standard

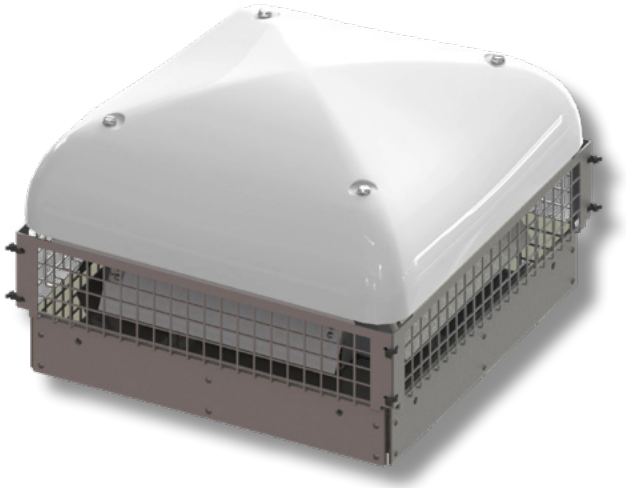

ELECTRICAL SUPPLY

220-240V/50Hz/1ϕ & 380-420V/50Hz/3ϕ

TEMPERATURE RANGE

-20°C to +60°C (dependent on size)

SIZES

190, 225, 310, 355, 400, 450, 500 and 630 mm

CONSTRUCTION

The fan cowl is manufactured from cold pressed fibre glass and contains an ultra violet stabiliser, which ensures the cowls will not fade due to sunlight. Standard colourant: BS 5252 10 A 5 (Goosewing grey). The impeller is protected by the bird guard against foreign particles. The fan discharges horizontally.

IMPELLER

The impeller has backward curved blades and is manufactured from polyamide (plastic) and is located inside the airstream.

MOTOR

The motor is of the external rotor type. 1 phase AC motors are equipped with thermal contact. See motor IP class in the motor table.

INSTALLATION

Fans can be mounted to a roof curb via either an installation frame or alternatively can be fitted directly to roof base. Fans are suitable for mounting on a flat roof only.

SPEED CONTROLLER

Both AC and EC versions are available with speed control. EC motors are equipped with integral speed control for use with auxiliary 0-10v controller. AC motors can be controlled using a separate transformer speed control.

PRODUCT CODE

STOF-190-SAC-102-0

- aaa = impeller diameter, e.g. 190
- bbb S = shutter
- bbb AC = AC-motor
  EC = EC-motor
- ccc 1 = 1-phase
  3 = 3-phase
- ccc 0 = non insulated
- ccc 2 = aluzinc
- 0 Generation

ACCESSORIES (Pages 238-248) - CONTROLLERS (Pages 249-297)

The range of accessories include dampers, flexible connectors, service doors, outlet covers, guards, side covering and insulating connections. A quick reference guide is shown below.

DSM/DSC Adapter plate

Controls Potentiometer

Controls Transformer

Isolator Switch

Note: The ErP legislation Reg 1253 states that a multi-speed drive or variable speed drive must be used with this range of products.

PRODUCT & ELECTRICAL DETAILS

EC STOF SHUTTER ROOF FAN

Part Number (EC)	Part Code	Motor nominal data at 50 Hz Supply voltage	Power kW	Max current A	Speed r/min	Speed fan r/min	Maximum Operating Temp°C	Isolator
STOF-190-SEC-102-0	ST193211	220-240 V/50 Hz/1 Ph	0.083	0.75	3200	3070	60	EA002000
STOF-225-SEC-102-0	ST223211	220-240 V/50 Hz/1 Ph	0.082	0.7	2200	2050	60	EA002000
STOF-310-SEC-102-0	**ST313411**	**220-240 V/50 Hz/1 Ph**	**0.15**	**1.2**	**1525**	**1550**	**60**	**EA002000**
STOF-355-SEC-102-0	**ST353411**	**220-240 V/50 Hz/1 Ph**	**0.168**	**1.4**	**1250**	**1190**	**60**	**EA002000**
STOF-400-SEC-102-0	**ST403411**	**220-240 V/50 Hz/1 Ph**	**0.33**	**1.46**	**1270**	**1270**	**60**	**EA002000**
STOF-450-SEC-302-0	**ST453413**	**380-420 V/50 Hz/3 Ph**	**0.97**	**1.7**	**1550**	**1560**	**60**	**EA002000**
STOF-500-SEC-302-0	**ST503413**	**380-420 V/50 Hz/3 Ph**	**1.96**	**3**	**1560**	**1570**	**40**	**EA002000**
STOF-630-SEC-302-0	**ST633413**	**380-420 V/50 Hz/3 Ph**	**2.75**	**4.3**	**1300**	**1310**	**55**	**EA002000**

Horizontal Shutter EC	IP class	Insulation	Motor protection	Speed Controller 0-10 V
STOF-190-SEC-102-0	54	B	Internal TOP	EA002107
STOF-225-SEC-102-0	54	B	Internal TOP	EA002107
STOF-310-SEC-102-0	54	B	Internal TOP	EA002107
STOF-355-SEC-102-0	54	B	Internal TOP	EA002107
STOF-400-SEC-102-0	54	B	Internal TOP	EA002107
STOF-450-SEC-302-0	54	B	Internal TOP	EA002107
STOF-500-SEC-302-0	54	B	Internal TOP	EA002107
STOF-630-SEC-302-0	54	B	Internal TOP	EA002107

AC STOF SHUTTER ROOF FAN

Part Number (AC)	Part Code	Motor nominal data at 50 Hz Supply voltage	Power kW	Max current A	Speed r/min	Speed fan r/min	Maximum Operating Temp°C	Isolator
STOF-190-SAC-102-0	ST191211	220-240 V/50 Hz/1 Ph	0.052	0.23	2350	2170	65	EA002000
STOF-225-SAC-102-0	ST221211	220-240 V/50 Hz/1 Ph	0.155	0.68	2500	2450	60	EA002000
STOF-310-SAC-102-0	**ST311411**	**220-240 V/50 Hz/1 Ph**	**0.137**	**0.62**	**1325**	**1300**	**60**	**EA002000**
STOF-355-SAC-102-0	**ST351411**	**220-240 V/50 Hz/1 Ph**	**0.27**	**1.18**	**1330**	**1300**	**60**	**EA002000**
STOF-355-SAC-302-0	**ST351413**	**380-420 V/50 Hz/3 Ph**	**0.27**	**0.72**	**1390**	**1390**	**60**	**EA002000**
STOF-400-SAC-102-0	**ST401411**	**380-420 V/50 Hz/3 Ph**	**0.47**	**2.05**	**1340**	**1350**	**60**	**EA002000**
STOF-400-SAC-302-0	ST401413	380-420 V/50 Hz/3 Ph	0.515	1.19	1400	1200	60	EA002000
STOF-450-SAC-302-0	**ST451413**	**380-420 V/50 Hz/3 Ph**	**0.71**	**1.45**	**1350**	**1350**	**60**	**EA002000**
STOF-500-SAC-302-0	**ST501413**	**380-420 V/50 Hz/3 Ph**	**1.52**	**2.91**	**1370**	**1360**	**60**	**EA002000**

Horizontal shutter AC	IP class	Insulation	Motor protection	Transformer	Current A	IP class	Voltage
STOF-190-SAC-102-0	44	B	Internal TOP	EA900000	1	54	230VAC 50/60 Hz
STOF-225-SAC-102-0	44	F	Internal TOP	EA900000	1	54	230VAC 50/60 Hz
STOF-310-SAC-102-0	44	B	Internal TOP	EA900000	1	54	230VAC 50/60 Hz
STOF-355-SAC-102-0	44	F	Internal TOP	EA900001	1.5	54	230VAC 50/60 Hz
STOF-355-SAC-302-0	44	F	TOP brought out	EA900029	2.5	54	400VAC 50/60 Hz
STOF-400-SAC-102-0	54	F	TOP brought out	EA900008	2.5	54	230VAC 50/60 Hz
STOF-400-SAC-302-0	54	F	TOP brought out	EA900029	2.5	54	400VAC 50/60 Hz
STOF-450-SAC-302-0	54	F	TOP brought out	EA900029	2.5	54	400VAC 50/60 Hz
STOF-500-SAC-302-0	54	F	TOP brought out	EA900030	4	54	400VAC 50/60 Hz

The part numbers shown above are for the standard un-insultated, aluzinc finish. Wiring diagrams, please see pages 172-173.

Products in **bold** are available from our UK Distributors on next day delivery, if ordered by 4pm. Please call to confirm availability on 01206 222 580.

K_{OCT} FACTORS FOR SOUND DATA (STOF SHUTTER PRODUCT)

				K Oct Correction factors (dB)							
				Octave band mid-frequency (Hz)							
Fan code	Sound path	Min rpm	Max rpm	63	125	250	500	1000	2000	4000	8000
STOF-190-Sbb-10c-0	Surroundings	0	766	5	-1	-6	-2	-3	-11	-19	-20
STOF-190-Sbb-10c-0	Surroundings	767	1533	-6	-4	-6	-2	-6	-5	-15	-28
STOF-190-Sbb-10c-0	Surroundings	1534	3042	-14	-11	-3	-3	-7	-5	-12	-16
STOF-190-Sbb-10c-0	Surroundings	3043	3660	-16	-14	-5	-2	-7	-6	-11	-13
STOF-190-Sbb-10c-0	To the inlet duct	0	766	5	-2	-5	-7	0	-11	-21	-23
STOF-190-Sbb-10c-0	To the inlet duct	767	1533	-9	-2	-5	-5	-10	-5	-7	-30
STOF-190-Sbb-10c-0	To the inlet duct	1534	3042	-11	-8	-1	-5	-10	-8	-11	-16
STOF-190-Sbb-10c-0	To the inlet duct	3043	3660	-13	-9	-5	0	-10	-9	-13	-14
STOF-225-Sbb-10c-0	Surroundings	0	1533	-9	-5	-6	-4	-5	-5	-17	-24
STOF-225-Sbb-10c-0	Surroundings	1534	2480	-10	-9	-5	-4	-7	-4	-13	-15
STOF-225-Sbb-10c-0	To the inlet duct	0	1533	-6	-2	-4	-10	-5	-9	-18	-24
STOF-225-Sbb-10c-0	To the inlet duct	1534	2480	-7	-8	-2	-10	-9	-10	-15	-19
STOF-310-Sbb-10c-0	Surroundings	0	893	1	-3	0	0	-5	-13	-20	-26
STOF-310-Sbb-10c-0	Surroundings	894	1717	-7	-4	2	-2	-5	-10	-16	-26
STOF-310-Sbb-10c-0	To the inlet duct	0	893	-1	0	-2	-6	-11	-9	-23	-29
STOF-310-Sbb-10c-0	To the inlet duct	894	1717	-11	-2	0	-6	-9	-12	-15	-25
STOF-355-Sbb-10c-0	Surroundings	0	893	1	-3	0	0	-5	-13	-20	-26
STOF-355-Sbb-10c-0	Surroundings	894	1378	-8	-3	-2	-1	-4	-10	-18	-27
STOF-355-Sbb-10c-0	To the inlet duct	0	893	-1	0	-2	-6	-11	-9	-23	-29
STOF-355-Sbb-10c-0	To the inlet duct	894	1378	-13	-1	-3	-7	-10	-13	-17	-26
STOF-355-Sbb-30c-0	Surroundings	0	893	1	-3	0	0	-5	-13	-20	-26
STOF-355-Sbb-30c-0	Surroundings	894	1390	-8	-3	-2	-1	-4	-10	-18	-27
STOF-355-Sbb-30c-0	To the inlet duct	0	893	-1	0	-2	-6	-11	-9	-23	-29
STOF-355-Sbb-30c-0	To the inlet duct	894	1390	-13	-1	-3	-7	-10	-13	-17	-26
STOF-400-Sbb-10c-0	Surroundings	0	893	3	0	1	-2	-4	-12	-20	-29
STOF-400-Sbb-10c-0	Surroundings	894	1340	-3	0	0	-3	-3	-11	-19	-27
STOF-400-Sbb-10c-0	To the inlet duct	0	893	-1	4	1	-5	-8	-6	-12	-29
STOF-400-Sbb-10c-0	To the inlet duct	894	1340	-10	2	3	-4	-6	-11	-13	-14
STOF-400-Sbb-30c-0	Surroundings	0	893	3	0	1	-2	-4	-12	-20	-29
STOF-400-Sbb-30c-0	Surroundings	894	1315	-3	0	0	-3	-3	-11	-19	-27
STOF-400-Sbb-30c-0	To the inlet duct	0	893	-1	4	1	-5	-8	-6	-12	-29
STOF-400-Sbb-30c-0	To the inlet duct	894	1315	-10	2	3	-4	-6	-11	-13	-14
STOF-450-Sbb-30c-0	Surroundings	0	893	-2	-3	-2	-2	-4	-9	-16	-27
STOF-450-Sbb-30c-0	Surroundings	894	1566	-11	-2	-4	-4	-4	-7	-11	-20
STOF-450-Sbb-30c-0	To the inlet duct	0	893	0	-4	-3	-10	-10	-13	-20	-31
STOF-450-Sbb-30c-0	To the inlet duct	894	1566	-12	-2	-6	-12	-11	-12	-16	-24
STOF-500-Sbb-30c-0	Surroundings	0	766	-4	-2	-1	-4	-2	-12	-18	-25
STOF-500-Sbb-30c-0	Surroundings	767	1574	-7	0	-1	-2	-5	-9	-14	-19
STOF-500-Sbb-30c-0	To the inlet duct	0	766	0	-1	-5	-11	-6	-14	-21	-29
STOF-500-Sbb-30c-0	To the inlet duct	767	1574	-9	0	-4	-9	-10	-13	-18	-24
STOF-630-Sbb-30c-0	Surroundings	0	893	1	3	0	-3	-4	-10	-16	-25
STOF-630-Sbb-30c-0	Surroundings	894	1340	-8	2	-1	-3	-5	-7	-13	-16
STOF-630-Sbb-30c-0	To the inlet duct	0	893	11	3	-3	-6	-7	-12	-21	-27
STOF-630-Sbb-30c-0	To the inlet duct	894	1340	-6	6	-3	-8	-9	-10	-17	-23

PERFORMANCE TABLE

EC STOF SHUTTER ROOF FAN

	Pressure (Pa)												
Horizontal shutter EC	0	50	100	150	200	250	300	350	400	450	500	600	700
STOF-190-SEC-102-0	0.18	0.17	0.16	0.15	0.14	0.13	0.11	0.10	0.08	0.03			
STOF-225-SEC-102-0	0.25	0.23	0.21	0.19	0.17	0.13	0.07						
STOF-310-SEC-102-0	0.51	0.49	0.47	0.44	0.41	0.35	0.24						
STOF-355-SEC-102-0	0.76	0.70	0.64	0.55	0.43	0.20							
STOF-400-SEC-102-0	1.11	1.06	1.01	0.93	0.85	0.75	0.60	0.26					
STOF-450-SEC-302-0	1.97	1.92	1.86	1.81	1.75	1.68	1.46	1.54	1.46	1.36	1.25	0.95	
STOF-500-SEC-302-0	2.99	2.94	2.88	2.83	2.76	2.70	2.63	2.56	2.48	2.40	2.33	2.15	1.90
STOF-630-SEC-302-0	4.63	4.55	4.45	4.35	4.24	4.13	4.01	3.90	3.75	3.60	3.45	3.07	2.62
	Airflow m^3/s												

AC STOF SHUTTER ROOF FAN

	Pressure (Pa)												
Horizontal shutter AC	0	50	100	150	200	250	300	350	400	450	500	600	700
STOF-190-SAC-102-0	0.27	0.26	0.24	0.23	0.21	0.19	0.17	0.14	0.08				
STOF-225-SAC-102-0	0.27	0.26	0.25	0.24	0.22	0.20	0.17	0.15	0.09				
STOF-310-SAC-102-0	0.46	0.43	0.39	0.34	0.26	0.01							
STOF-355-SAC-102-0	0.77	0.71	0.66	0.60	0.52	0.41							
STOF-355-SAC-302-0	0.80	0.76	0.71	0.65	0.58	0.49	0.37	0.09	0.00				
STOF-400-SAC-102-0	1.13	1.08	1.03	0.97	0.89	0.81	0.69	0.51	0.21				
STOF-400-SAC-302-0	1.18	1.14	1.08	1.03	0.96	0.88	0.79	0.65	0.47	0.23	0.01		
STOF-450-SAC-302-0	1.64	1.58	1.52	1.45	1.37	1.29	1.19	1.09	0.95	0.77			
STOF-500-SAC-302-0	2.56	2.51	2.44	2.38	2.31	2.23	2.15	2.06	1.97	1.87	1.76	1.45	0.84
	Airflow m^3/s												

FAN CHART - EXPLANATION AND DEFINITIONS

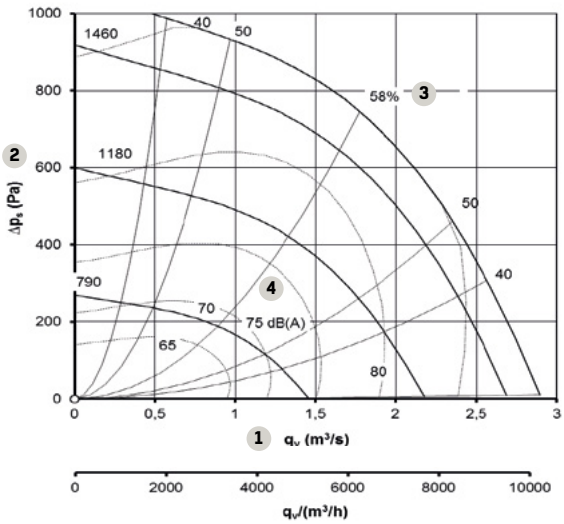

SYMBOLS

1.	qv	Air flow	m³/s, m³/h
2.	Δp_t	Static pressure	Pa
3.	η	Total fan efficiency	%
4.	L_{wA}	A-weighted total sound power level	dB(A)
	L_{pA}	A-weighted total sound pressure level	dB(A)
	ΔL	Remote attenuation	dB

SOUND PRESSURE LEVEL

The total A-weighted sound power level, LwA emitted from the power roof ventilator to the surroundings can be read in the chart. The sound pressure level at different distances from the power roof ventilator can be determined by using the following formula:

$L_{pA} = L_{wA} - \Delta L$

Distance L (m)	1	3	5	10	15	20	25	30	40
Attenuation Δ (dB)	7	17	22	28	31	34	36	37	40

SOUND LEVEL AT DIFFERENT OCTAVE BANDS

			Correction Koct (dB) Octave band mid-frequency (Hz)							
Sound path	MinRPM	MaxRPM	63	125	250	500	1000	2000	4000	8000
Surroundings	0	766	5	-1	-6	-2	-3	-11	-19	-20
To the inlet duct	0	766	5	-2	-5	-7	0	-11	-21	-23

The total A-weighted sound power level, LwA, emitted from the power roof ventilator to the surroundings can be read in the fan chart. The sound power level by octave band to the surroundings and to the inlet duct (without A-weighting) can be obtained by using the following formula:

$L_{woct}=L_{wA} + K_{oct}$. The corrections are given in Koct table for both sound paths and correct speed area.

PERFORMANCE CHARTS

FAN CHART, SHUTTER – STOF-190

STOF-190_SEC 1 - ST193211

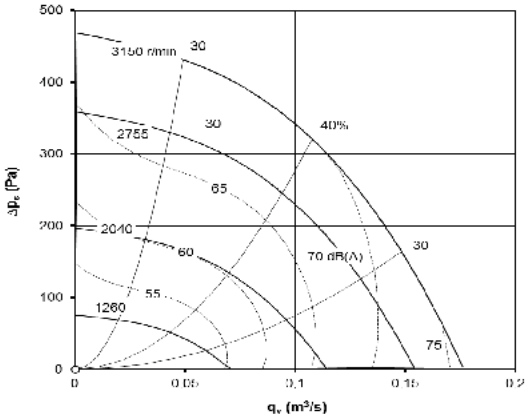

STOF-190_SAC 1 - ST191211

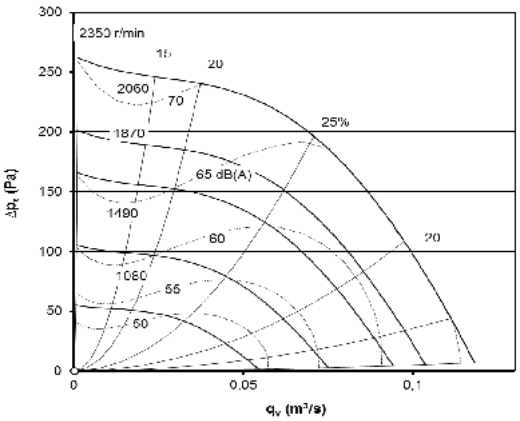

FAN CHART, SHUTTER – STOF-225

STOF-225_SEC 1 - ST223211

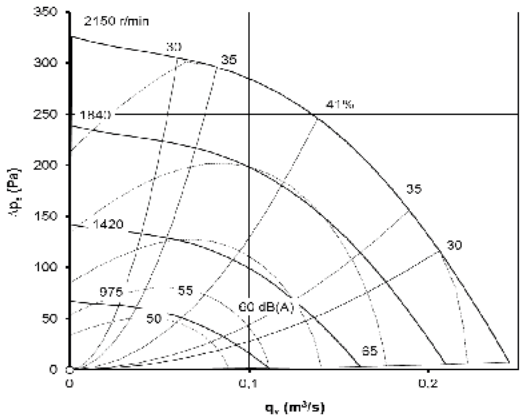

STOF-225_SAC 1 - ST221211

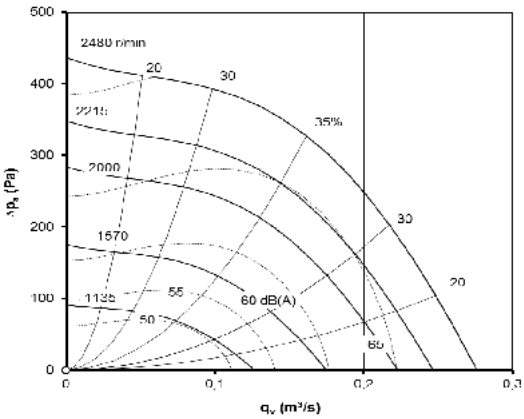

FAN CHART, SHUTTER – STOF-310

STOF-310_SEC 1 - ST313411

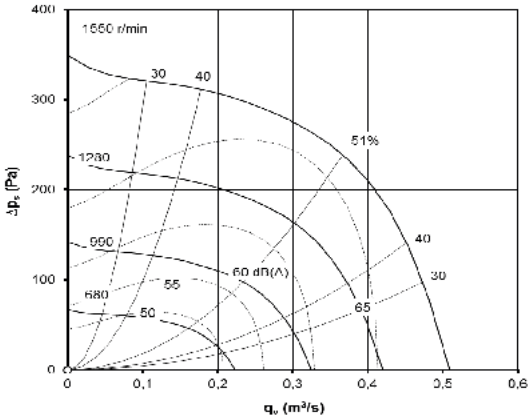

STOF-310_SAC 1 - ST311411

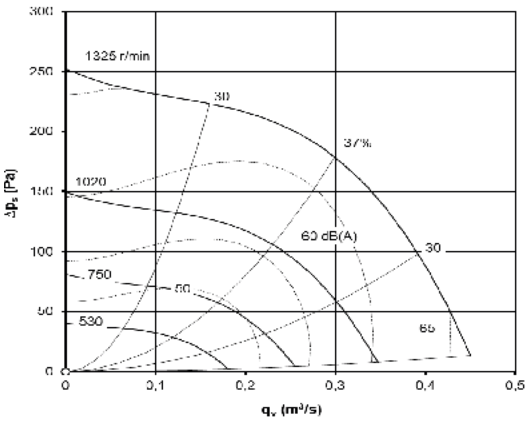

PERFORMANCE CHARTS

FAN CHART, SHUTTER – STOF-355

STOF-355_SEC 1 - ST351411

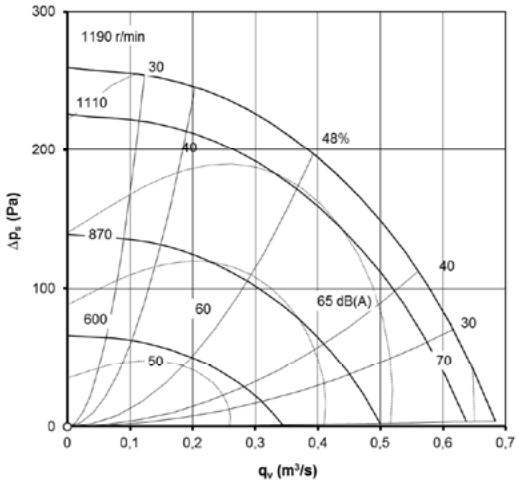

STOF-355_SAC 3 - ST351413

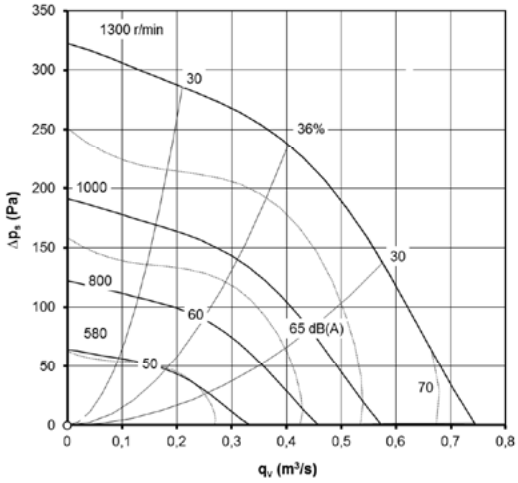

STOF-355_SAC 1 - ST353411

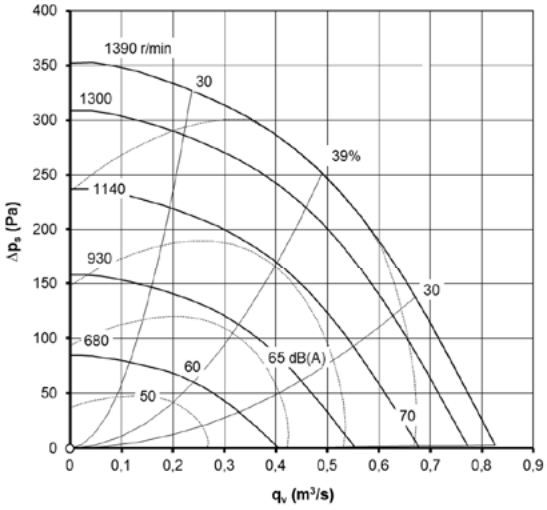

PERFORMANCE CHARTS

FAN CHART, SHUTTER – STOF-400

STOF-400_SEC 1 - ST403411

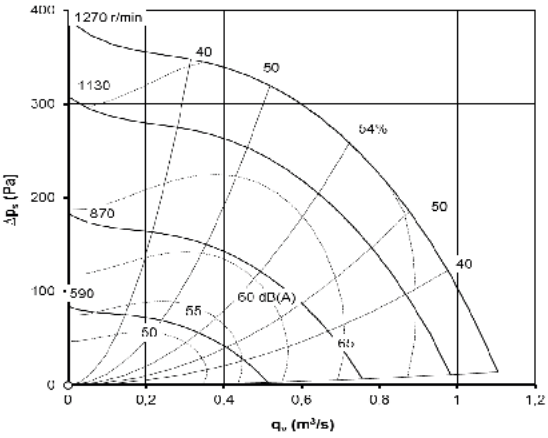

STOF-400_SAC 3 - ST401413

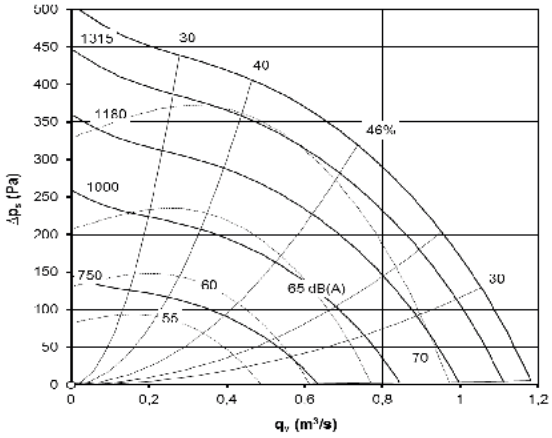

STOF-400_SAC 1 - ST401411

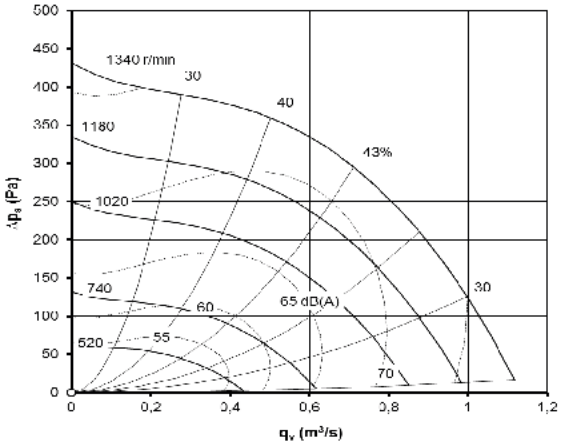

FAN CHART, SHUTTER – STOF-450

STOF-450_SEC 3 - ST453413

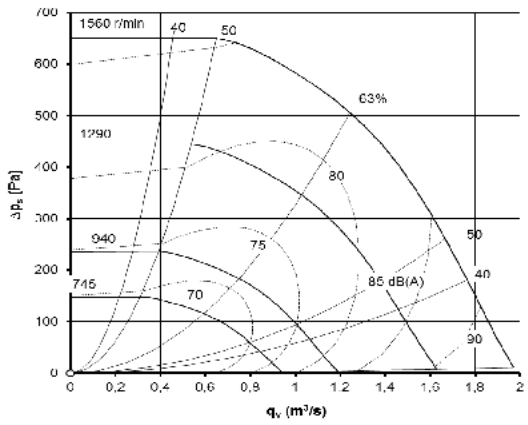

STOF-450_SAC 3 - ST451413

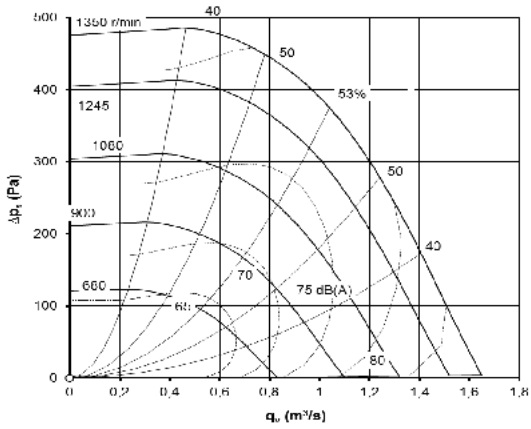

PERFORMANCE CHARTS

FAN CHART, SHUTTER – STOF-500

STOF-500_SEC 3 - ST503413

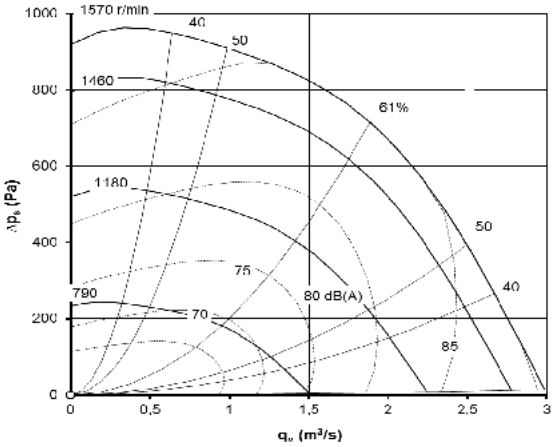

STOF-500_SAC 3 - ST501413

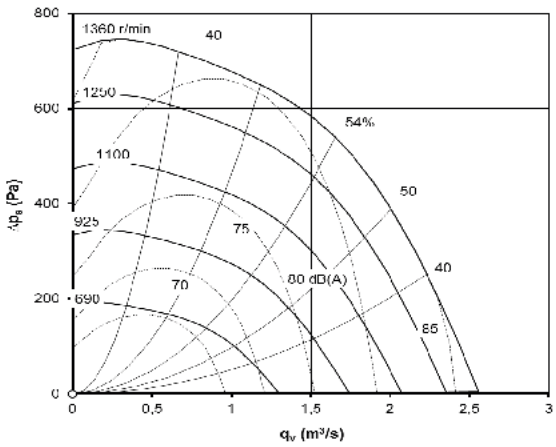

FAN CHART, SHUTTER – STOF-630

STOF-630_SEC 3 - ST633413

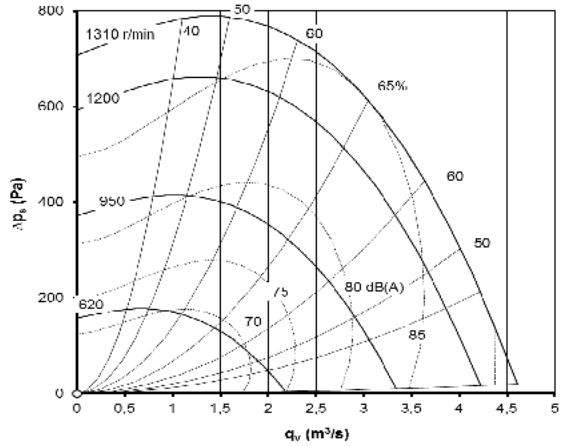

DRAWINGS AND DIMENSIONS

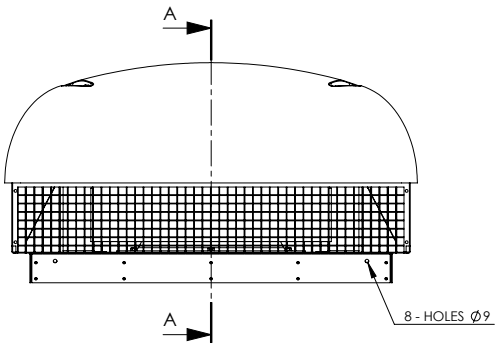

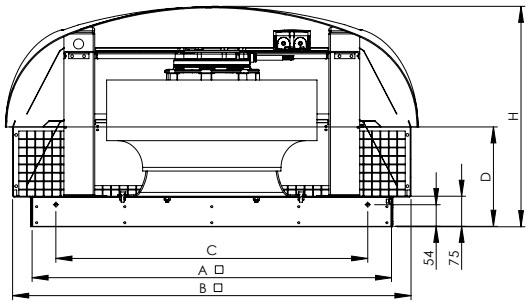

SECTION A-A

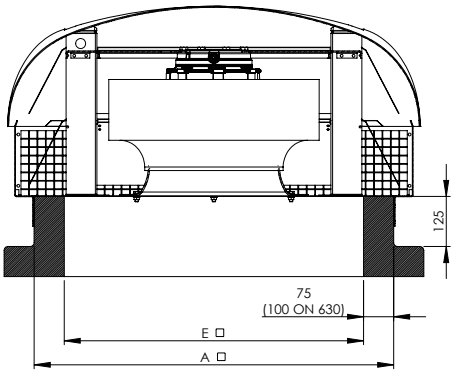

DSC AND DSM SKIRT DIMENSIONS

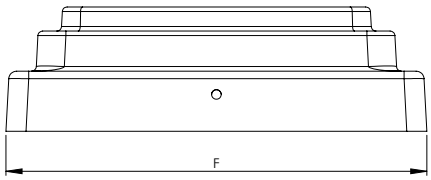

STOF Unit AC and EC								DSC & DSM		
Fan size	A	B	C	D	E	H	Weight	Size	F	Adaptor Required
190	447	480	328	270	280	270	11	200	450	No
225	447	480	328	325	280	326	12.5		450	No
310	447	600	328	390	280	389.5	16.5		450	No
355	557	710	438	425	380	423.5	24	250	525	No
400	627	710	508	425	460	424.5	29.5	330	600	No
450	717	820	598	460	550	461	42		600	843723
450	717	820	598	460	550	461	42	400	700	No
500	897	1030	778	550	730	550	69		700	843726
500	897	1030	778	550	730	550	69	500	900	No
630	1117	1300	998	610	900	610.5	90.5		900	843729
630	1117	1300	998	610	900	610.5	90.5	630	1050	844405
630	1117	1300	998	610	900	610.5	90.5	760	1250	844717

DSC and DSM relates to products which we have withdrawn from sale, but is shown in order to determine compatibility with our new STOF product.

All dimensions shown in mm

WIRING DIAGRAMS - STOF

STOF AC 1ph 190, 225, 310, 355

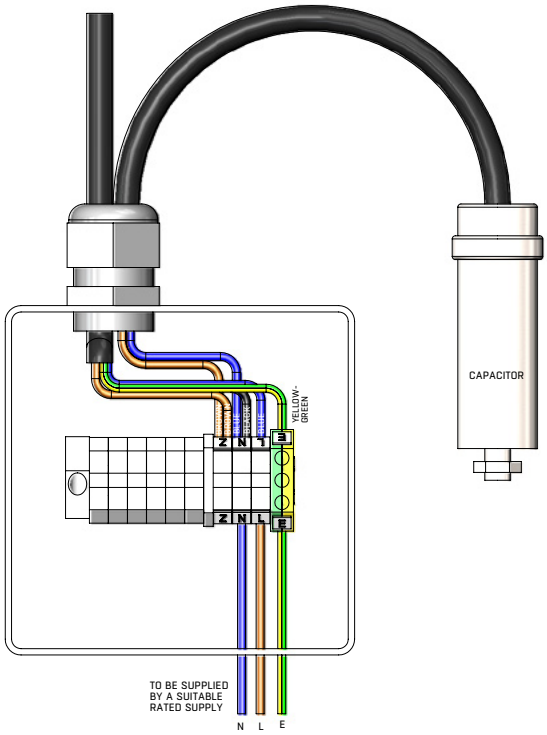

STOF AC 1ph 400

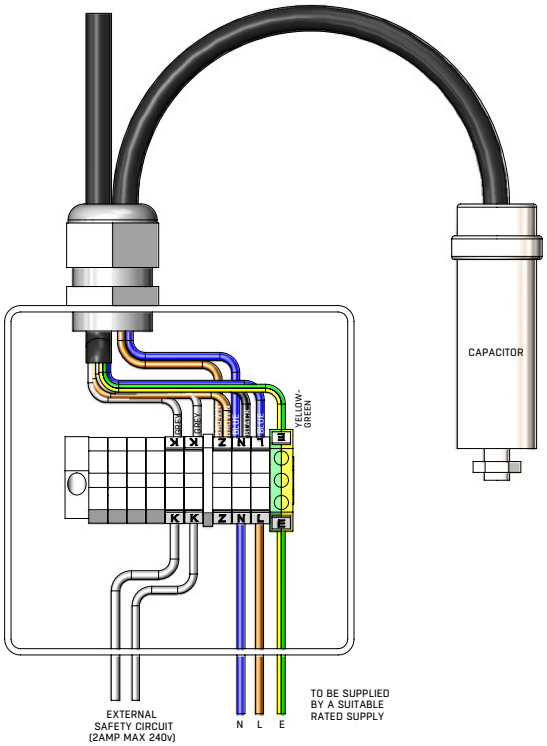

STOF AC 3ph 355, 450, 500

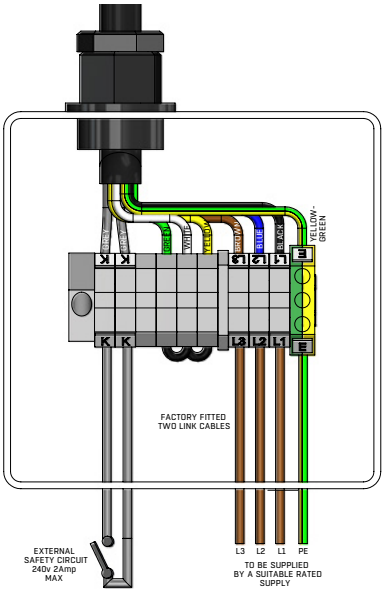

WIRING DIAGRAMS - STOF

STOF EC 1ph 190, 225, 310, 355

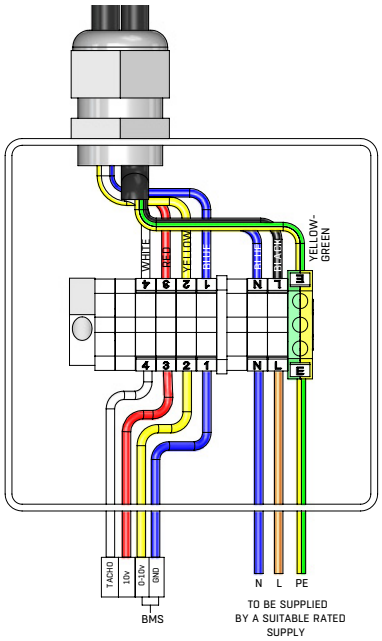

STOF EC 1ph 400

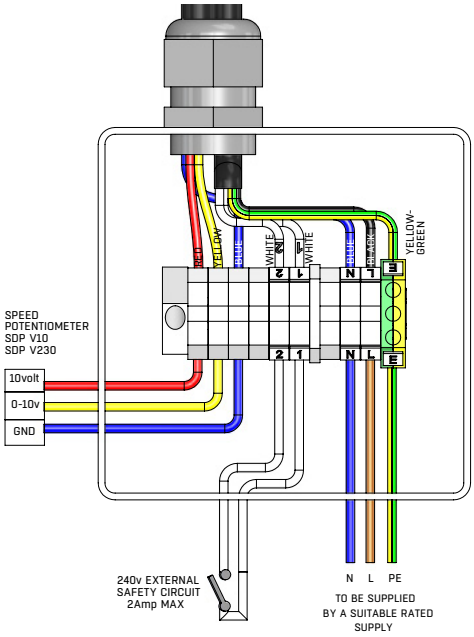

STOF EC 3ph 450

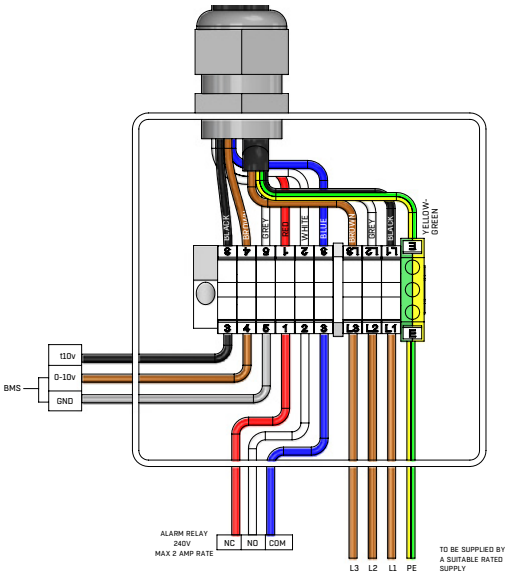

STOF EC 3ph 500, 630

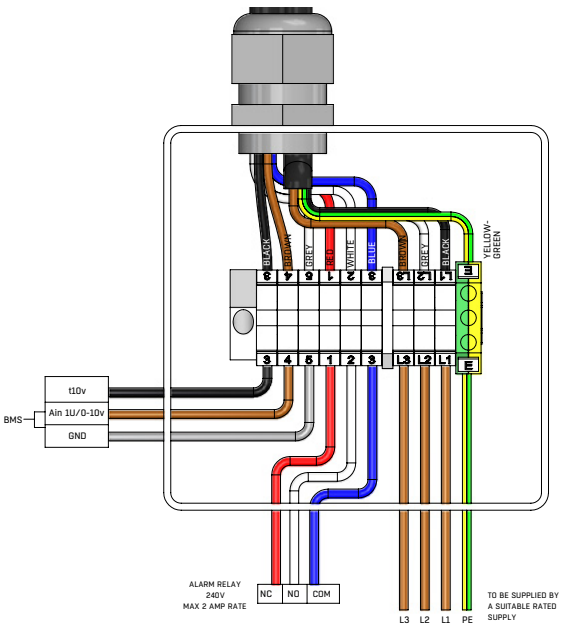

FIRE DAMPERS
ETPR-E-1

PRODUCT FACTS

- ETPR-E-1 is used as a closing device for preventing spread of fire and smoke in ventilation ducts between fire compartments
- Available with fusible link or actuator/thermal trip mode
- The fire resistance period of the fire damper meets the requirement of class E90 (test method EN 1366-2) and it can be used as a fire restricting device in fire insulated ducts of EI90 at most
- Sizes 100-500

Fire and smoke damper ETPR-E-1 is used as a closing device for preventing the spread of fire and smoke in ventilation ducts between fire compartments. Fire dampers are equipped with fusible link and spring mechanism for closing or with an electrical actuator.

ETPR-E-1 is CE marked based on product standard EN 15650:2010 and conforms to fire resistance class E 120 / E 60 S when installed in vertical ducting and E 90 / E 60 S in horizontal ducting. Fire Dampers are tested according to test standard EN 1366-2 and classified according to EN 13501-3. ETPR-E-1 is approved for installation into building elements made of concrete, lightweight concrete, brick or gypsum plate walls. The damper shaft can be installed in horizontal or vertical position. An E-classified fire damper requires fire insulation for ducts in order to comply fully with the compartmentation requirement (EI).

ETPR-E-1 is available in standard duct sizes 100 to 500 mm in diameter. Hot-galvanized damper casing conforms to EN 1506 and is equipped with a VELODUCT® gasket for minimal leakage between joints. The damper casing fulfils the requirements of tightness class C according to EN 1751. ETPR-E-1 fulfils the requirements of smoke leakage classification S according to EN 13501-3. The standard release temperature of the fusible link is + 70°C. Other temperatures for fusible link are available to special order (+ 100°C).

Electrical actuator is available as type 24 V or 230 V. When using control and monitoring system FICO, the actuator has to be always of type 24 V. More information of FICO systems can be found in separate brochure of FICO-128 or FICO-2.

The motorised dampers are tested 10000 times (open/close) and therefore dampers can be used also for daily ventilation purposes. The use of motorised damper enables automatic function testing (e.g. by FICO controls) and the use of a smoke-detector-based release system. The motor is equipped with built-in micro switches for both open and closed position. In case of a power cut, the damper closes automatically.

CE CERTIFIED

PRODUCT CODE

Fire damper (circular) ETPR-E-1 - aaa - bb - c

Size (diameter mm)

100, 125, 150, 160, 200, 250, 300, 315, 400, 500

Actuator

01 = fuse +70°C
03 = 24V AC/DC and thermal trip
05 = 230V AC and thermal trip
08 = auxiliary device microswitch open +70°C
12 = auxiliary device pneumatic cylinder, long fuse +70°C

Actuator model

0 = without actuator
1 = standard
2 = FWB
3 = FWG
4 = FWO

Replacement fuse ETPR - 99 - 01 - c

SL400011 - Fusible Link 70°C

4 = fuse 70°C
6 = long fuse 70°C *)
7 = fuse 100°C

*) for electric and gas release

DRAWING AND DIMENSIONS

DAMPER WITH FUSIBLE LINK

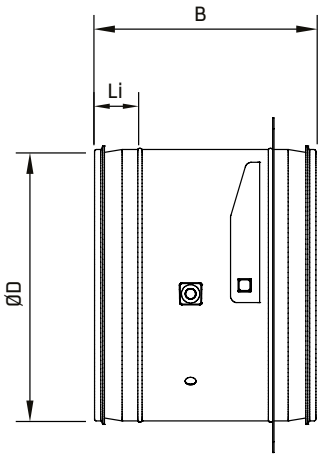

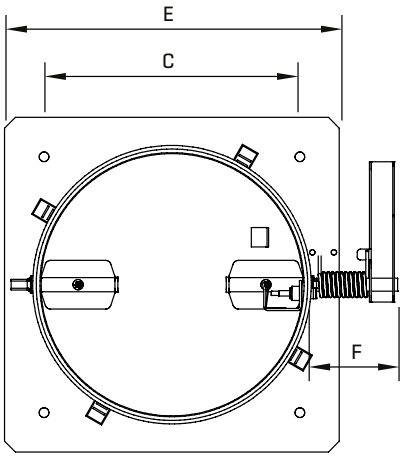

MOTORISED DAMPER

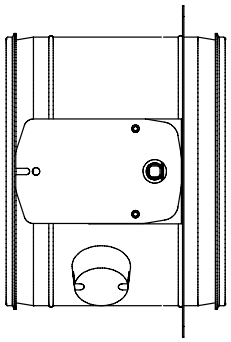

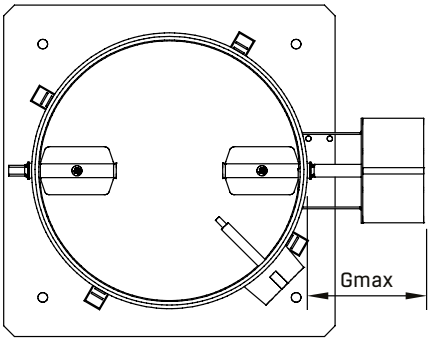

Size	Part Number Fusible Link	*Part Number Motorised 230v	**Part Number Motorised 24v	D	B	C	E	F	Gmax	Li	Weight (kg) damper with thermal fuse	Weight (kg) motorised damper
100	**SL000148**	**SL400017**	**SL400080**	100	205	129	160	80	125	35	1.0	2.6
125	**SL000147**	**SL400018**	SL400081	125	205	134	185	80	125	35	1.4	3.1
150	**SL000530**	**SL400019**	SL400082	150	205	159	220	80	125	35	1.7	3.4
160	**SL000146**	**SL400020**	**SL400083**	160	205	159	220	80	130	35	1.7	3.4
200	**SL000145**	**SL400021**	SL400084	200	205	203	260	80	130	35	2.0	3.7
250	**SL000144**	**SL400022**	**SL400085**	250	205	237	310	80	130	40	2.6	4.2
300	**SL400000**	**SL400023**	SL400086	300	205	281	380	80	130	40	3.7	5.4
315	**SL000143**	**SL400024**	SL400087	315	205	281	380	80	130	40	3.7	5.4
400	**SL000142**	**SL400025**	SL400088	400	280	390	470	80	130	60	5.8	7.4
500	**SL000141**	**SL400026**	**SL400089**	500	280	480	570	80	130	60	7.7	9.4

All dimensions in mm.

*Please note the motorised option above includes the 230v actuator with a thermal trip (05)
**Please note the motorised option above includes the 24v actuator with a thermal trip (03)

Products in **bold** are available from our UK Distributors on next day delivery, if ordered by 4pm. Please call to confirm availability on 01206 222 580.

PRESSURE DROP

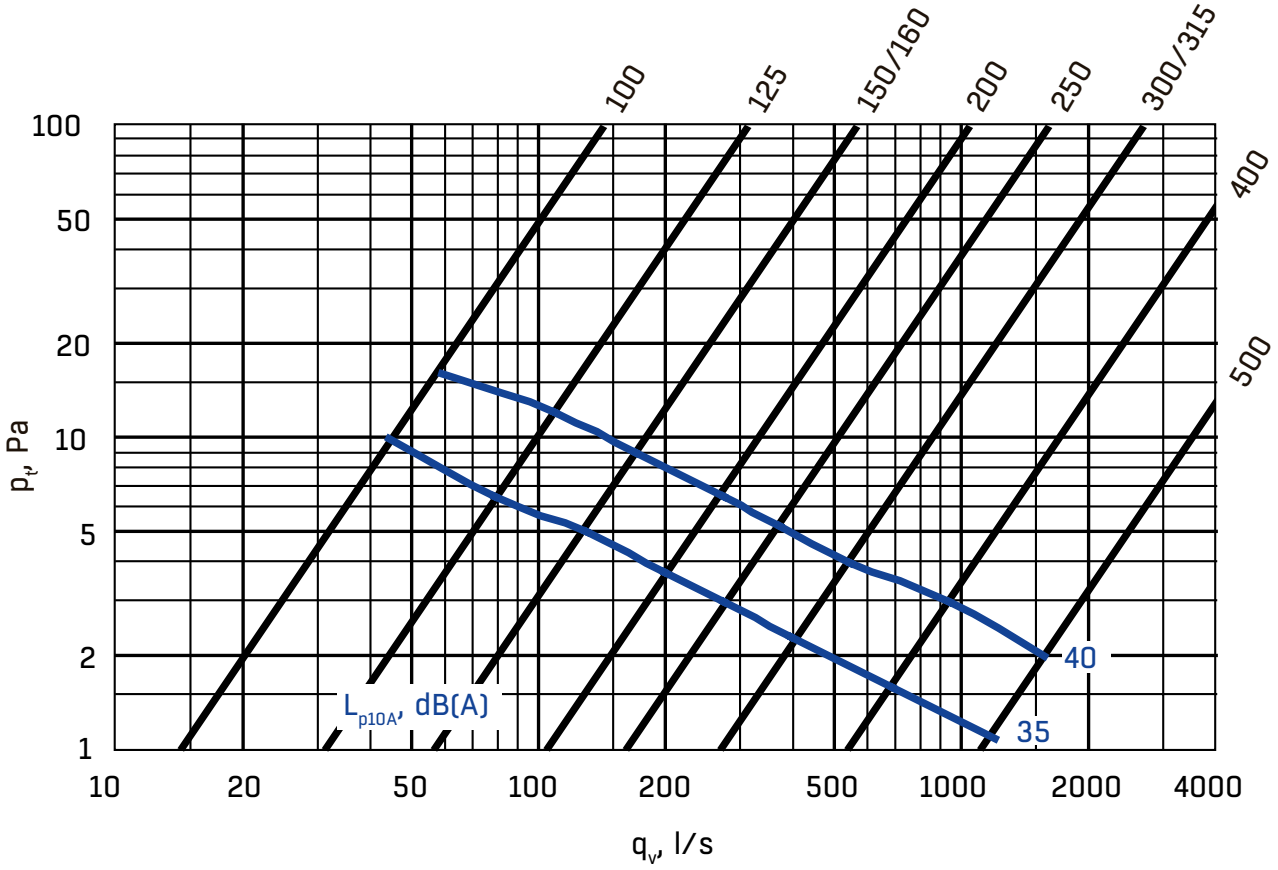

SOUND POWER LEVEL CORRECTION BY OCTAVE BANDS

OCTAVE BAND (Hz)	125	250	500	1000	2000	4000	8000
CORRECTION K_{oct}	16	10	5	0	-7	-13	-18
TOLERANCE +/-	6	3	3	3	3	3	3

$L_{Woct} = L_{p10A} + K_{oct}$

DEFINITIONS

q_v	Air flow	l/s
L_{Woct}	Sound power level in kanal	dB
L_{p10A}	Sound pressure level with 4 dB room attenuation (10 m2sab)	dB(A)
K_{oct}	Correction	dB
Δp_s	Pressure drop	Pa

AUXILIARY DEVICES

PNEUMATIC RELEASE

A fire damper equipped with a pressure cylinder closes either when the thermal fuse blows or by means of a pressure impact when the pressure is switched on. The pressure is obtained from HALON / CO_2 or other automatic extinction system network. The required pressure impulse for the cylinder is approximately 200 kPa. The pressure cylinder is connected to the system by a Cu D8 pipe.

MICROSWITCH

The microswitch indicates blade position, sends an impulse after the blade has been closed to other fire dampers equipped for remote release, gives an alarm in the control system or stops/ starts the operation of fans depending on the designed system. The microswitch has no effect on the thermal fuse, nor does it cause the release of the fire damper.

The microswitch can also be installed in contact with pneumatic or electrical release. In that case, it must be specified in order.

Switch position when fire damper is set up (open) = stud pushed in

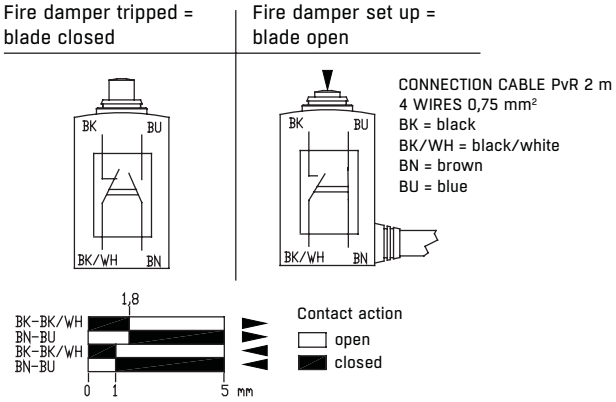

ELECTRICAL PROPERTIES: OPERATING TEMPERATURE -25 ... +70°C
AC-15: B300 (Ue=230VAC, Ie=1,5A)
DC-13: R300 (Ue=24VDC, Ie =3A)

WIRING DIAGRAM FOR DAMPER MOTOR

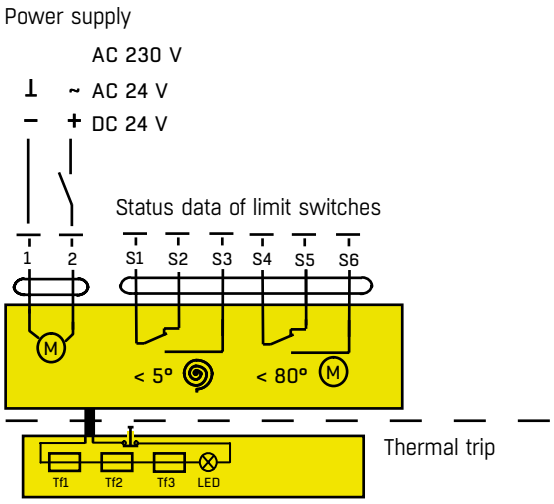

ACTUATOR ELECTRICAL DATA

Fire damper size	Actuator	Voltage	Equipment	Max power hold/drive	Power for wire sizing
100 - 315	ETPR-99-MF-A-2	24V AC/DC	Thermal trip	2,5W/5,5W	8 VA
100 - 315	ETPR-99-MF-A-4	230V AC	Thermal trip	3W/5W	8 VA
400 - 630	ETPR-99-MF-B-2	24V AC/DC	Thermal trip	3,5W/7W	10 VA
400 - 630	ETPR-99-MF-B-4	230V AC	Thermal trip	3,5W/8W	12,5 VA

Storage temperature of fire damper actuator should not exceed +50°C.

INSTALLATION

To ensure the performance and operation of the fire damper, it is necessary to do the installation in accordance with the instructions and local regulations.

Fire damper ETPR-E-1 can be fitted to either horizontal or vertical ducting. Max. velocity of air flow through the damper is 15 m/s, the operation in not dependent on the air flow direction through the damper.

The body has to be fixed firmly into building element in accordance with the installation drawing shown below. The damper has a factory fitted installation plate for mounting. Fire damper is installed into building element according to installation drawings below.

It is recommended that the fire damper is fitted in to a complete ductwork run. An inspection hatch should be located adjacent to the damper to allow for easy inspection and cleaning of the damper.

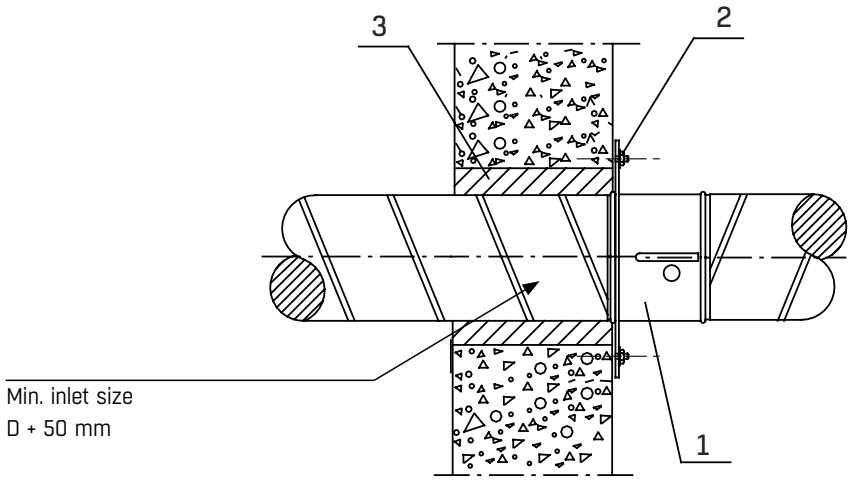

Installation of fire damper into building elements (walls and intermediate floors) made of concrete or masonry, construction thickness ≥ 110 mm. The blade shaft can be placed in any position, though should be located for ease of access for maintenance and with sufficient free-space around it to allow full operation.

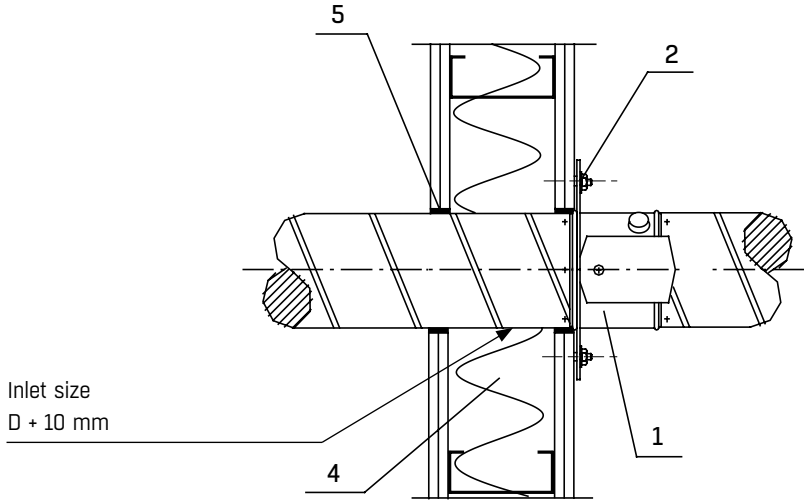

Installation of fire damper into lightweight plasterboard building elements (gypsum board or similar), wall thickness ≥ 116 mm.

The blade shaft can be placed in any position.

1. Fire damper
2. Fastening into concrete or masonry building element: steel anchor ≥ M6, 4 pcs
   Fastening into lightweight plasterboard building element: steel anchors suited for boards ≥ M6, 4 pcs
3. Grouting, gypsum or concrete based, 25-35 mm thick
4. Mineral wool, min. density 40 kg/m^3
5. Fire resistant mass = mastic

PROMOTIONAL PAGE ONLY
FLÄKT WOODS ALSO OFFERS

Veloduct

ETCE
Fire damper

For your personal safety
The new member of the Veloduct family

The Fläkt Woods CE-marked fire damper Veloduct ETCE is designed to fulfill the requirements for harmonized product standard EN 15650. The construction of ETCE follows the quality of Veloduct fittings with EPDM rubber sealings in casing with very low leakage rates and easy installation.

Veloduct ETCE shall always be installed inside the wall or floor according to installation instructions.

KEY BENEFITS

- CE-marked
- Veloduct/EPDM rubber sealings
- Various installation options
- Easy installation
- Wide size range coming soon

FIRE CLASSES

- EI 60 (v_e - h_o i <-> o) S
  Installation into rigid building elements (walls and intermdiate floors) or into flexible walls (gypsum board or similar)
- EI 90 (v_e - h_o i <-> o) S
  Installation into flexible walls (gypsum board or similar)
- EI 120 (h_o i <-> o) S
  Installation into rigid intermediate floors

VERSIONS

- Motorised version, sizes from 100 to 400
- ETCE-aaaa-03-1 (24V-T)
- ETCE-aaaa-05-1 (230V-T)

FIRE VALVES
KSOF

PRODUCT FACTS

- Prevents the spreading of fire and smoke into duct systems
- Manufactured from sheet steel
- CE Marked KSOF
- Tested to SP 0402-CPR-SC0768-13

Fire class according to EN 13501-3 when installed into a gypsum wall:

E 45 (ve i <-> o) S
E 60 (ve i <-> o)

Fire class according to EN 13501-3 when installed into a rigid wall:

E 60 (ve i <-> o) S
E 120 (ve i <-> o) S

GENERAL INFORMATION

KSOF is developed for use as a fire damper valve in exhaust ventilation systems.

Fire damper valve KSOF is CE marked based on product standard EN 15650:2010 and tested according to test standard EN 1366-2.

KSOF has a low noise level and good natural noise attenuation.

APPLICATION

CE marked fire damper valve KSOF is an exhaust valve, used to prevent spreading of fire and smoke into duct systems.

KSOF has a low sound level and good natural sound attenuation.

A spring loaded fuse will close the valve when temperature reaches the fusible link rating, 70°C.

MATERIAL AND SURFACE FINISH

The valve is manufactured from hot galvanized steel sheet. KSOF is powder coated for a high surface finish and good impact and scratch resistance. Standard colour White RAL-9010. Other colour on demand.

KSOF can also be delivered with economical CleanVent coating on demand.

The valve body is supplied with a cellular plastic gasket to form an airtight seal against the mounting frame.

The separate mounting ring is manufactured from galvanized steel sheet. Each valve is delivered with mounting ring KKT.

INSTRUCTIONS

Instructions for installation, adjustment and care are set out in detail in our technical instruction which accompanies each product. The instruction is also accessible on www.flaktwoods.co.uk/woods

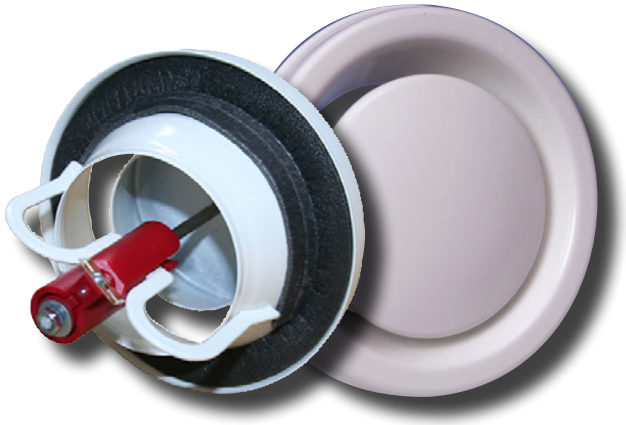

CE CERTIFIED

PRODUCT CODE

KSOF-aaa-C

Fire damper valve
(including mounting ring KKT)

Size (aaa)
100, 125, 150, 160, 200
C = CleanVent coating

Following markings are added to the valve code if needed:
E = special colour

For example:

KSOF-100-E (KSOF-100 + KKT with special colour)

KSOF-100-C (KSOF-100 + KKT with CleanVent coating)

KSOF-100-E-C (KSOF-100 + KKT with special colour and CleanVent coating)

PERFORMANCE CHARTS

KSOF-100

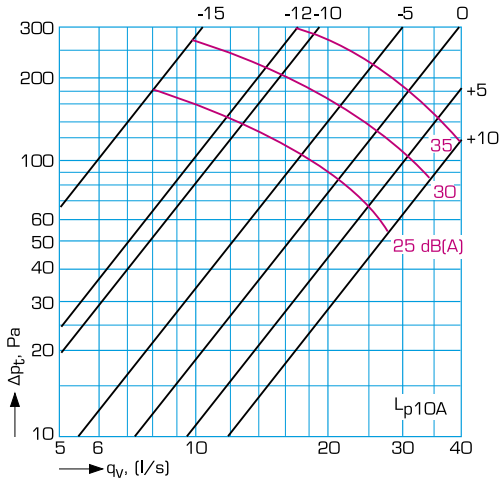

KSOF-125

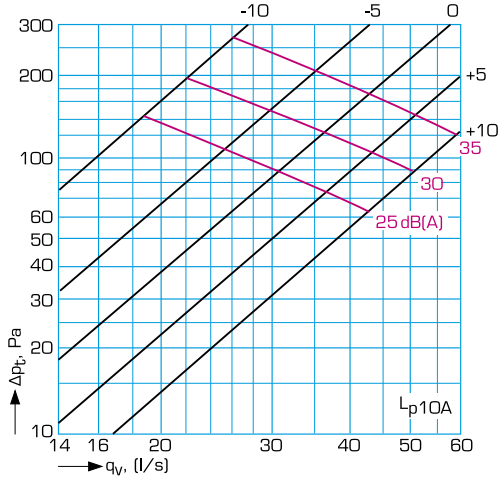

KSOF-150, KSOF-160

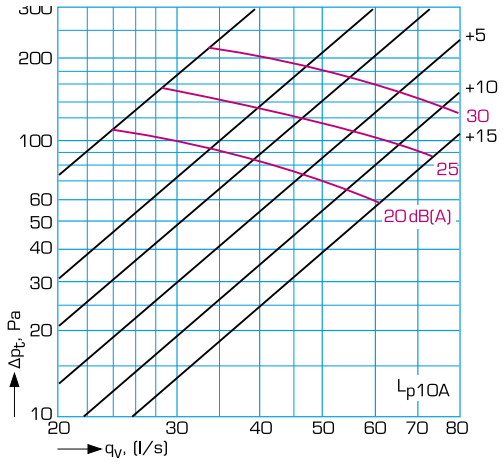

KSOF-200

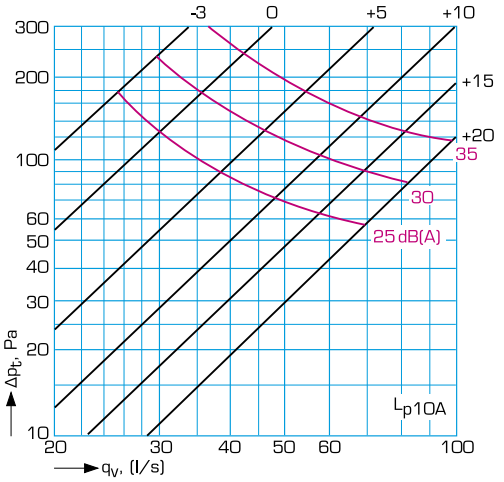

DIMENSIONS AND SOUND LEVELS

SOUND POWER LEVEL LW

KSOF	Correction Koct(dB), Octave bands, middle frequency, Hz						
	125	250	500	1000	2000	4000	8000
100	2	-1	-1	1	-4	-8	-22
125	-3	-3	-3	-2	0	-7	-24
150/160	0	-3	-1	-2	-7	-11	-25
200	1	-3	-4	3	-8	-12	-29
Tol +/-	3	2	2	2	2	2	3

Sound power levels by octave bands are obtained by adding to total sound pressure level Lp10A,dB(A) the corrections Koct presented in the table according to the following formula:
L Woct = L p10A + K oct

Correction Koct is average value in range of use of KE unit.

SOUND ATTENUATION ΔL

KSOF	Slots (mm)	Sound attenuation L(dB)Octave bands, middle frequency, Hz							
		63	125	250	500	1000	2000	4000	8000
100	-10	22	19	16	16	16	18	9	9
	0	22	18	13	12	12	13	6	7
	10	22	17	12	9	8	11	4	6
125	-10	21	18	15	14	15	14	10	7
	0	19	17	12	11	11	10	6	5
	10	20	16	10	9	9	8	5	5
150/160	-10	19	16	14	14	14	16	8	8
	0	18	14	11	11	11	13	5	7
	10	18	14	10	9	9	11	4	6
200	-10	15	15	14	14	16	15	10	9
	0	14	12	11	10	12	12	7	7
	10	13	11	8	8	9	10	6	6
Tol.		6	3	2	2	2	2	2	3

The average sound attenuation L from duct to room including the end reflection of the connecting duct in ceiling installation, is obtained in the table above.

DEFINITIONS

qv	air volume	l/s
pt	total pressure drop	Pa
Lp10A	sound pressure level with 4 dB room attenuation dB(A)	(10 m2sab)
Lwoct	sound power level by octave bands	dB
ΔL	sound attenuation	dB
Koct	correction	dB(A)

DIMENSIONS AND WEIGHT

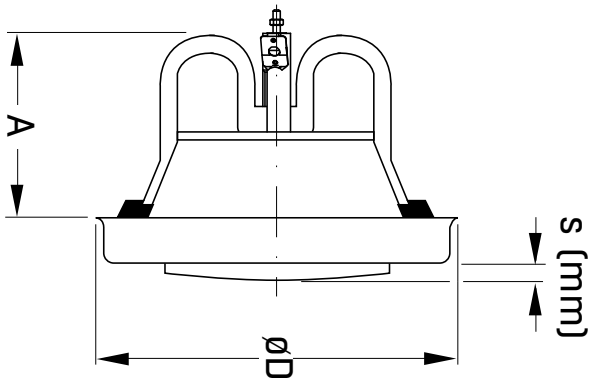

Size KSOF	Part Number	ØD [mm]	ØA [mm]	Weight [g]
100	**SL400075**	**134**	**74**	**0.3**
125	**SL400076**	**160**	**85**	**0.38**
150	**SL400077**	**191**	**89**	**0,5**
160	**SL400078**	**191**	**89**	**0.5**
200	**SL400079**	**241**	**107**	**0.723**

CleanVent included as standard.

KKT

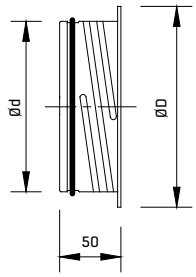

Size KKT	Part Number KKT	Pack Size	Ød [mm]	ØD [mm]	Weight KKL [g]
100	SL000115	56	99	122	75
125	SL000114	36	124	148	102
150	SL000113	24	149	175	123
160	SL000112	25	159	184	131
200	SL000111	12	199	225	165

Mounting ring included as standard.

All dimensions shown in mm

Products in **bold** are available from our UK Distributors on next day delivery, if ordered by 4pm. Please call to confirm availability on 01206 222 580.

ALL CONSTRUCTION PRODUCTS HAVE TO BE CE MARKED

CE marking for fire dampers was made mandatory from 1st January 2013

Fire test standard for dampers:
- Shall be EN 1366-2
- NT-Fire or any other standards can not be used any more

CE marked fire dampers according to EN 15650 should:
- Release mechanism - shall always be at least thermal sensor 70 °C
- Testing / inspection - at least once every six months
- Installation - Manufacturer shall provide installation instructions
- National certificates:
  - Products according to EN 15650
  - Additional national certificates for installation and use of CE marked products?

CE marking gives more responsibility to the manufacturer (us)!
- Manufacturer shall give Declaration of Conformity (CPD). This will become (CPR) "Declaration of Performance"
- Notified body shall make yearly control visits (FPC) to manufacturer premises
- National type approvals are made according to national building regulations, which are valid for the respective country. Installation and use of the products are included in type approvals
- CE mark gives product performance in terms of classification standard terminology

CE CERTIFIED

DON'T PUT PEOPLE AT RISK **COMPLY NOW**

DAMPERS
IRIS & IRIS H

PRODUCT FACTS

- IRIS The ideal air flow regulation and measuring device for circular ducts
- Comes in a wide range of sizes and is economical and fast to install
- Maintenance is uniquely simple
- Also available in an acid-proof version
- Low sound level
- Easy to adjust
- Operation independent of flow direction
- Fully openable for cleaning of duct
- Tightness class C
- Maximum Ambient Temperature 80°C
- 12 sizes

CONSTRUCTION

The IRIS is composed of regulation plates, regulating nut or handle (size 80) and regulation scale plus manometer connections and casing.

The casing and regulation plates are made of hot-galvanized steel (standard IRIS) or acid-proof steel AISI 316 L (IRIS-aaa-H), other components of plastic. The joining collars are supplied with rubber sealing gasket.

APPLICATION

IRIS is an ideal solution for the exact and quick air flow measuring and regulation.

Because of its acid proof material, the IRIS-aaa-H is best suited for premises, where acid proof ducts are used.

INSTALLATION

The IRIS damper is secured to the ducting with rivets. For vertical mounting ensure the weight of the interconnecting ductwork is fully supported.

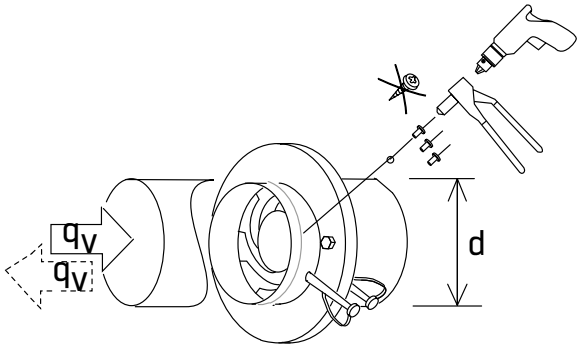

PRODUCT CODE

IRIS-aaa-b Regulation and measuring device

Diameter in mm (aaa)
80, 100, 125, 150, 160, 200, 250, 315, 355, 400, 500, 630, 800

Equipment (b)
1 = IRIS + unit package + spanner (sizes 80-400 mm)
2 = IRIS + spanner (sizes 400-800 mm)

IRIS-aaa-H Regulation and measuring device, acid-proof

Diameter in mm (aaa)
100, 125, 150, 160, 200, 250, 315, 355, 400, 500, 630, 800

PERFORMANCE CHARTS

IRIS-80

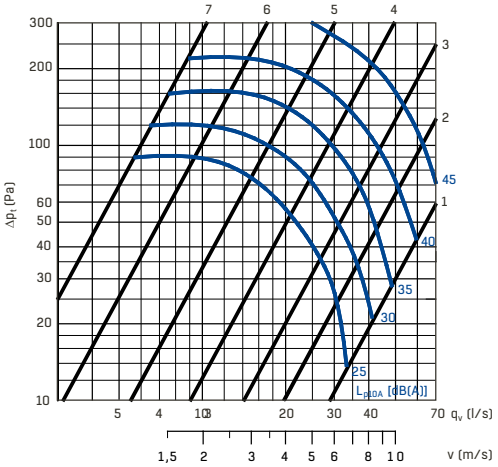

IRIS-100

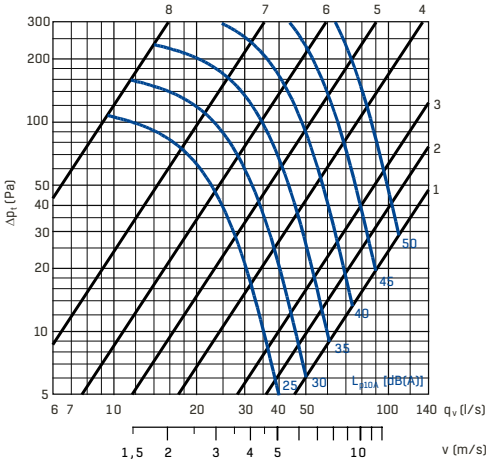

IRIS-125

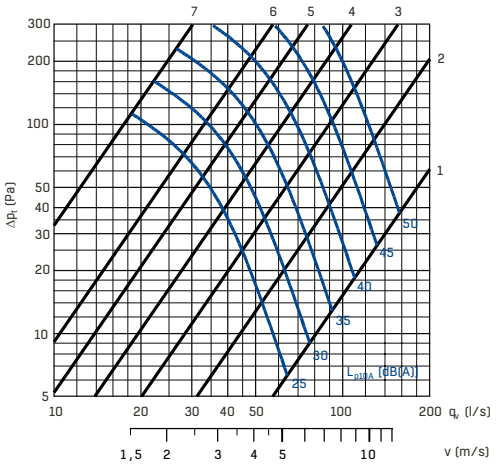

IRIS-150

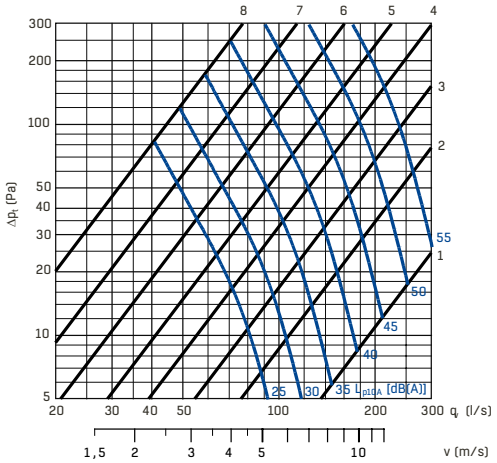

IRIS-160

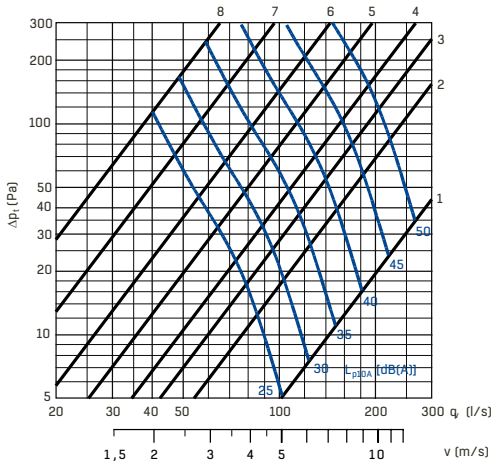

IRIS-200

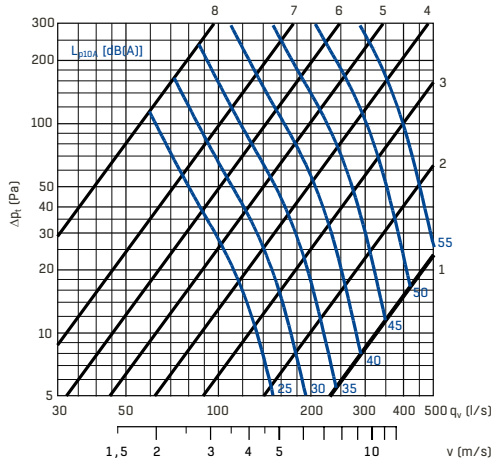

PERFORMANCE CHARTS

IRIS-250

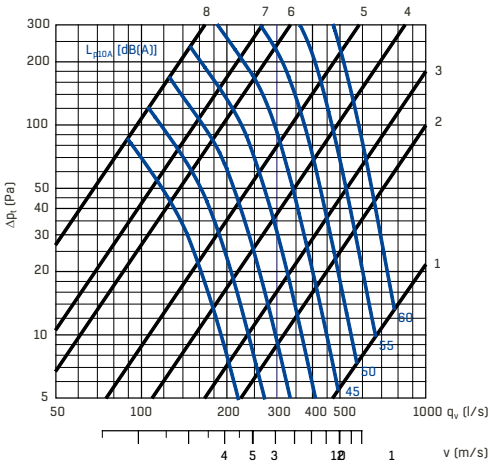

IRIS-315

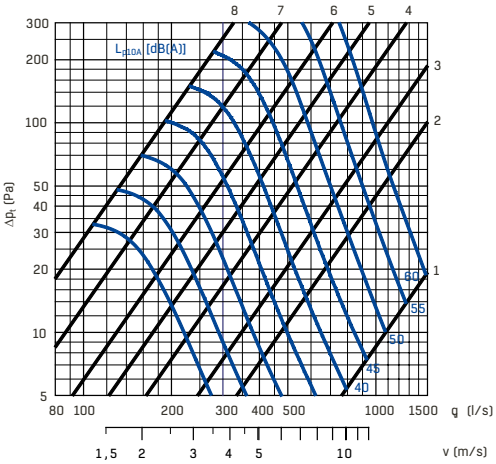

IRIS-400

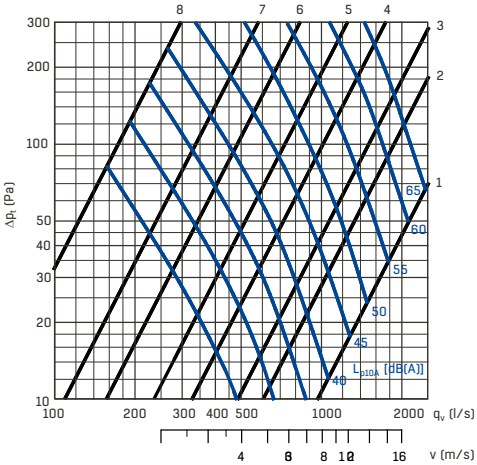

IRIS-500

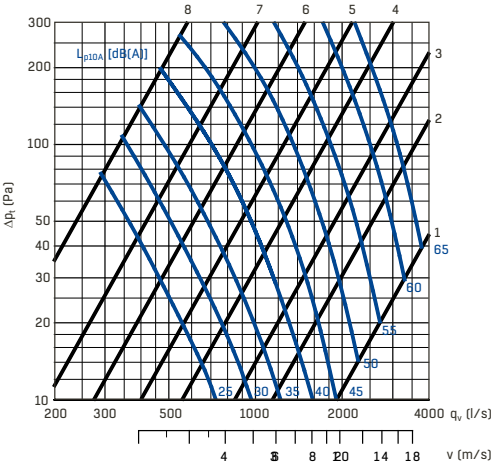

IRIS-630

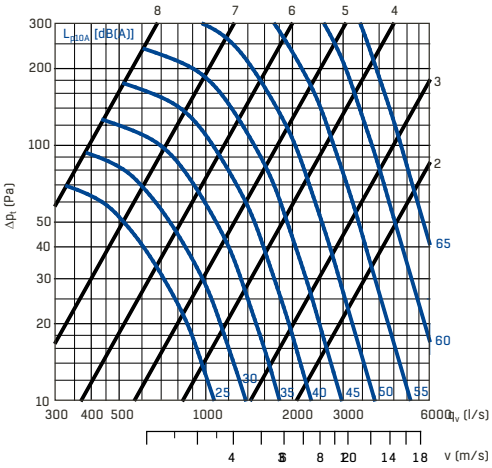

IRIS-800

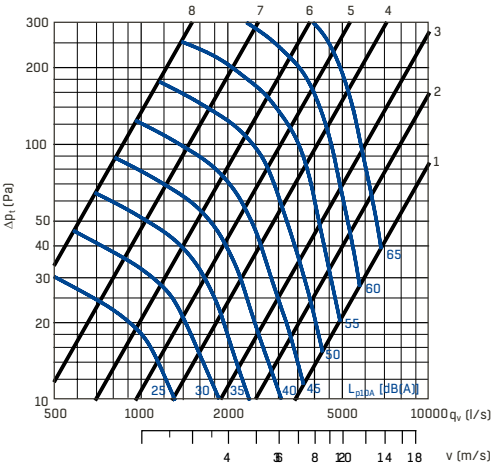

SOUND DATA

IRIS	Correction K_{oct} (dB), Medium frequency by octave band (Hz)							
	63	125	250	500	1000	2000	4000	8000
80	10	16	12	9	5	-1	-6	-23
100	25	21	16	9	4	-6	-12	-25
125	17	17	13	7	1	-4	-6	-17
150	21	20	14	8	0	-6	-16	-29
160	19	18	14	6	-1	-6	-13	-25
200	20	17	12	5	-2	-5	-14	-26
250	16	12	8	3	1	-4	-17	-32
315	24	12	5	0	1	-2	-13	-27
400	15	9	6	2	-1	-4	-9	-13
500	14	7	4	1	-1	-4	-8	-11
630	15	7	3	2	-1	-5	-9	-11
800	9	5	3	3	-1	-6	-10	-13
Tol.Δ	6	3	2	2	2	2	2	3

The sound power levels of the duct for every octave band are obtained by adding the corrections Koct of octave bands (see table above) to the total sound pressure level Lp10A dB(A) according to the following formula:

$L_{Woct} = L_{p10A} + K_{oct}$

Correction K_{oct} is the average in the range of use of the IRIS regulation and measuring device.

REGULATION AND MEASURING DEVICE IRIS

MATERIAL SPECIFICATION

Product Component	Material
Casing, blades	Hot galvanized steel or acid-proof steel (AISI 316)
Regulation mechanism	Polyacetal
Stickers, window cover	PVC plastic
Veloduct-sealing	EPDM rubber
Measuring tap	TRP plastic

SAFETY DISTANCES

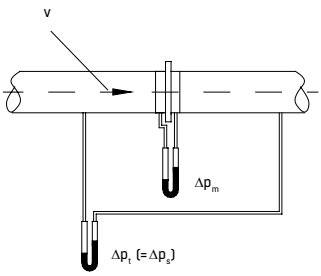

Type of flow distriburbance	The required safety distance L	
	m_2 = ±7%	m_2 = ±10%
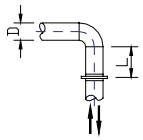	≥ 1 D	≥ 1 D
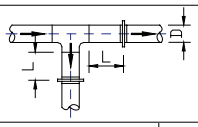	≥ 4 D	≥ 2 D
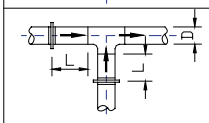	≥ 2 D	≥ 2 D
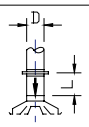	≥ 2 D	≥ 2 D

Accuracy of calibration during disturbance free air flow: ±5%

To ensure the functioning of the inlet air diffuser.

REGULATION AND MEASUREMENT OF AIR FLOW

The regulation plates form a virtually ideal measuring orifice which enables an easy and reliable measurement of the air flow.

To determine the air flow, measure the pressure difference Δpm at the manometer connections and check the corresponding air flow from the regulation chart.

The chart is shown on the damper casing and in the separate information for air flow regulation and measurement (the selection diagrams do not serve the air flow measurement). Air flow is regulated by the regulating nut or handle.

DRAWING AND DIMENSIONS

SIZES 100...800

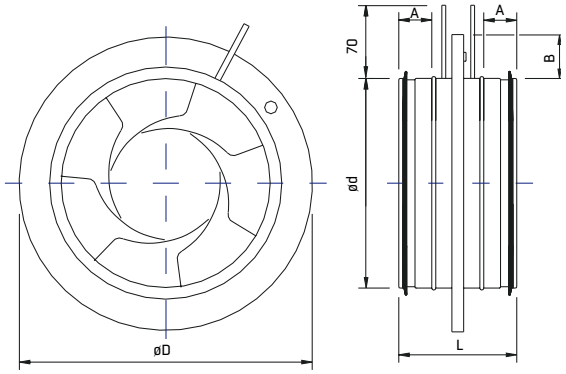

SIZE 80

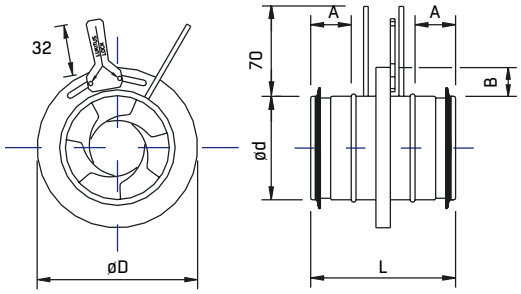

Size	IRIS		IRIS - H		ød	øD	L	A	B	Weight kg
	Product Code	Product Number	Product Code	Product Number						
80	IRIS080	SL000140	-	-	79	125	120	35	22	0.5
100	IRIS100	**SL000139**	IRIS100-H	SL400061	99	165	110	30	32	0.5
125	IRIS125	**SL000138**	IRIS125-H	SL400062	124	188	110	30	32	0.7
150	IRIS150	**SL000137**	IRIS150-H	SL400063	149	230	110	30	40	0.9
160	IRIS160	**SL000136**	IRIS160-H	SL400064	159	230	110	30	35	0.9
200	IRIS200	**SL000134**	IRIS200-H	SL400065	199	285	110	30	42	1.4
250	IRIS250	**SL000133**	IRIS250-H	SL400066	249	335	132	40	42	2.1
300	IRIS300	**SL000132**	IRIS300-H	SL400067	299	395	132	40	47	3.5
315	IRIS315	**SL000131**	IRIS315-H	SL400068	314	410	132	40	47	3.5
355	IRIS355	**SL000130**	-	-	-	-	-	-	-	-
400	IRIS400	**SL000129**	IRIS400-H	SL400069	398	525	150	50	62	6.4
500	IRIS500	**SL000128**	IRIS500-H	SL400070	498	655	150	50	77	9.6
630	IRIS630	SL000127	IRIS630-H	SL400071	628	815	150	50	92	15.6
800	IRIS800	SL000126	IRIS800-H	SL400072	798	1015	285	100	107	25

All dimensions shown in mm

CLEANING

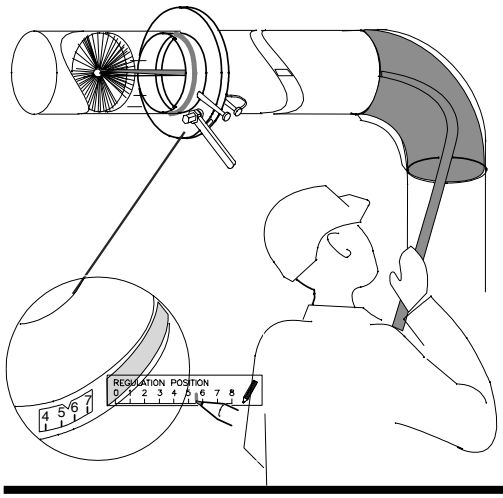

Products in **bold** are available from our UK Distributors on next day delivery, if ordered by 4pm. Please call to confirm availability on 01206 222 580.

NOTES

VALVES
SUPPLY KE

PRODUCT FACTS

- Supply air valve intended for installation in the ceiling
- Manufactured from steel sheet
- Available also in stainless steel
- Mounting ring included
- 5 sizes available

CONSTRUCTION

The KE is manufactured from steel sheet painted white.
Other paint finishes are available to special order.

Stainless steel version is also available and it is always delivered with a stainless steel version of mounting ring.

Valve body has a gasket made of cellular plastic and the control disc with screw spindle enables easy regulation and positional locking. Mounting rings KKT and KKL are manufactured from galvanized steel sheet. KKT is equipped with rubber sealing gasket.

INSTALLATION

Mounting ring is fitted into the duct with screws or rivets. The valve is fixed by "a screwing action" to locate the valve lugs into indents in the mounting ring. The valve can also be fitted with springs (model KEJ) and the mounting ring is not needed.

MEASUREMENT AND AIR FLOW REGULATION

Regulation of air flow is achieved by turning the control disc to change adjustment dimensions (mm). The measurement of air flow is made by a pressure difference measurement with a separate measuring tube. Refer to separate air flow measurement diagrams for information.

GENERAL INFORMATION

KE Supply air valve e.g in size 100 with mounting ring KKT-100 are manufactured by Fläkt Woods.

PRODUCT CODE

Supply air valve (including mounting ring)
KE-aaa-c

c = CleanVent coated

Size in mm (aaa)
100, 125, 150, 160, 200 Following markings are added to the valve code if needed:
E = special colour

For example:
KE-100-E (KE-100 with special colour)
Supply air valve, stainless steel KE-aaa-R

ACCESSORIES

Mounting ring with rubber gasket
KKT-aaa

Size (aaa)
100, 125, 150, 160, 200

Mounting ring, stainless steel KKR-aaa
Size (aaa)
100, 125, 160

PERFORMANCE CHARTS

KE-100

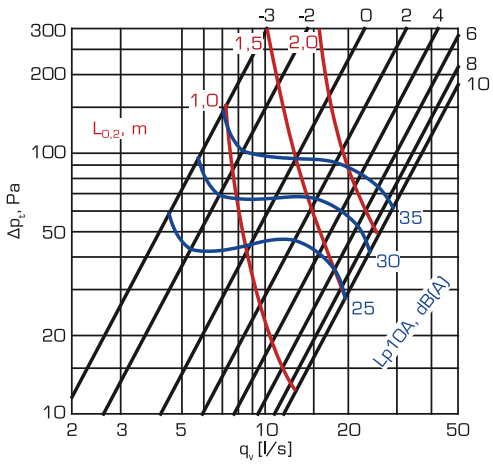

KE-125

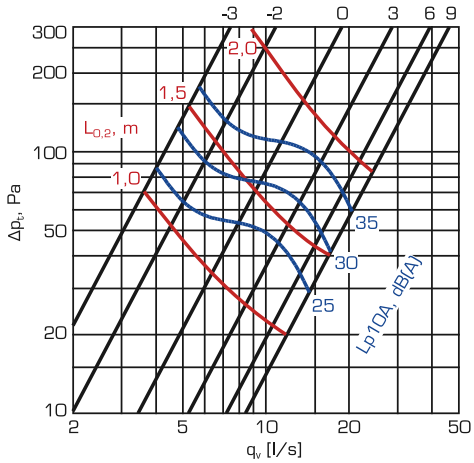

KE-150

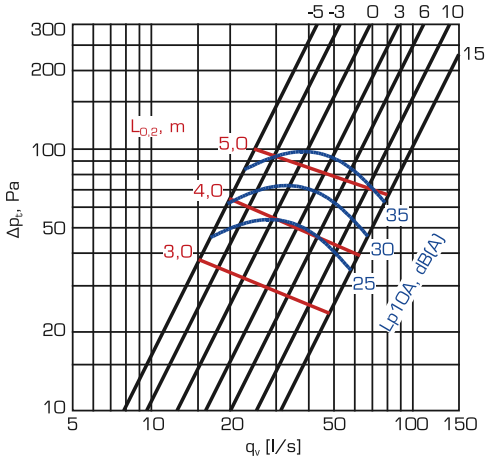

KE-160

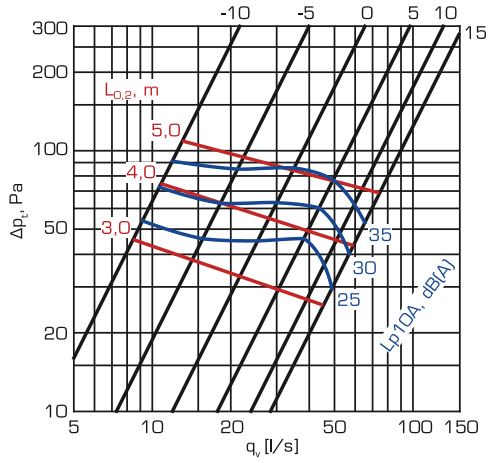

KE-200

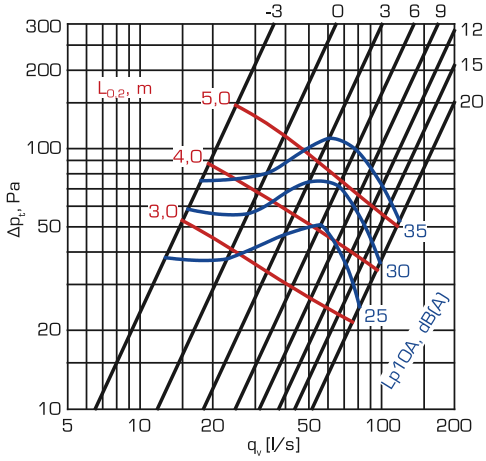

DIMENSIONS AND SOUND LEVELS

SOUND POWER LEVEL LW

KE	Correction Koct(dB), Octave bands, middle frequency, Hz						
	125	250	500	1000	2000	4000	8000
100	7	3	2	-2	-6	-14	-30
125	3	6	4	-3	-11	-21	-37
150	7	5	3	-2	-10	-20	-34
160	6	7	3	-3	-11	-27	-34
200	7	6	3	-2	-10	-25	-34
Tol +/-	3	2	2	2	2	2	3

Sound power levels by octave bands are obtained by adding to total sound pressure level Lp10A,dB(A) the corrections Koct presented in the table according to the following formula:

L Woct = L p10A + K oct

Correction Koct is average value in range of use of KE unit.

SOUND ATTENUATION ΔL

KE	Slots (mm)	Sound attenuation Δ(dB)Octave bands, middle frequency, Hz							
		63	125	250	500	1000	2000	4000	8000
100	-3	24	19	13	10	9	9	11	9
	6	23	16	11	7	6	5	6	6
	10	23	17	11	7	5	5	5	6
125	-7	19	16	11	7	4	4	5	6
	0	18	16	10	6	4	3	4	6
	15	19	15	9	5	3	2	3	4
150	-5	20	13	10	7	5	4	5	5
	3	19	13	9	5	4	3	4	4
	15	19	12	8	4	3	2	4	3
160	-5	18	13	10	6	5	5	5	6
	5	17	12	9	5	4	3	4	4
	10	17	12	8	5	4	3	4	3
200	-3	17	12	8	7	7	5	7	6
	6	17	12	7	6	6	5	7	5
	12	17	11	6	5	5	4	6	5
Tol.Δ		6	3	2	2	2	2	2	3

The average sound attenuation L from duct to room including the end reflection of the connecting duct in ceiling installation, is obtained in the table above.

DEFINITIONS

q_v	air volume	l/s
Δp_t	total pressure drop	Pa
L_{p10A}	sound pressure level with 4 dB room attenuation (10 m^2sab)	dB(A)
L_{woct}	sound power level by octave bands	dB
ΔL	sound attenuation	dB
K_{oct}	correction	dB(A)

DIMENSIONS AND WEIGHT

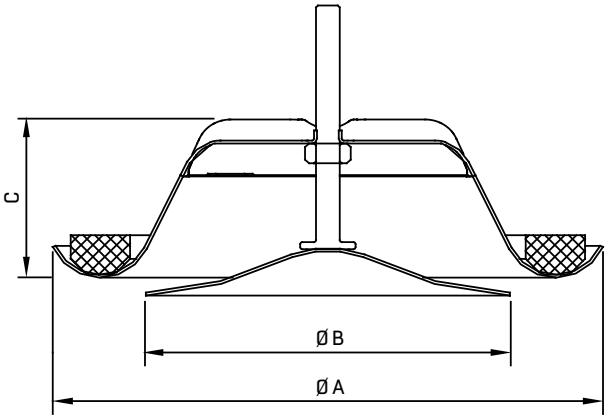

Size KE	Part Number	ØA [mm]	ØB [mm]	ØC [mm]	Weight [g]
100	**432109**	**140**	**92**	**40**	**170**
125	**432110**	**170**	**111**	**46**	**230**
150	**432111**	**202**	**135**	**54**	**340**
160	**432112**	**202**	**135**	**54**	**340**
200	**432113**	**254**	**194**	**64**	**550**

Mounting ring included as standard.

KKT

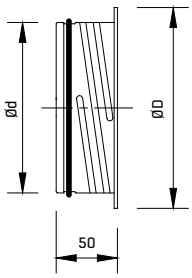

Size KKT	Part Number KKT	Pack Size	Ød [mm]	ØD [mm]	Weight KKT [g]
100	SL000115	56	99	122	75
125	SL000114	36	124	148	102
150	SL000113	24	149	175	123
160	SL000112	25	159	184	131
200	SL000111	12	199	225	165

All dimensions shown in mm

Products in **bold** are available from our UK Distributors on next day delivery, if ordered by 4pm. Please call to confirm availability on 01206 222 580.

NOTES

VALVES
EXTRACT KK

PRODUCT FACTS

- KK Exhaust valve intended for installation in the ceiling or on a wall
- Manufactured from steel sheet
- Available also in stainless steel
- Mounting ring included
- 6 sizes

CONSTRUCTION

The KK is manufactured from steel sheet painted white. Other paint finishes are available to special order. Stainless steel version is also available and it is always delivered with a stainless steel version of mounting ring (KKR). Valve body has a gasket made of cellular plastic and the control disc with screw spindle enables easy regulation and positional locking.

Mounting rings KKT are manufactured from galvanized steel sheet. KKT is equipped with rubber sealing gasket. KKR is manufactured from stainless steel.

INSTALLATION

Mounting ring KKT or KKR is fitted into the duct with screws or rivets. The valve is fixed by "a screwing action" to locate the valve lugs into indents in the mounting ring. The valve can also be fitted with springs (model KKJ) and the mounting ring is not needed.

MEASUREMENT AND AIR FLOW REGULATION

Regulation of air flow is achieved by turning the control disc to change adjustment dimensions (mm). The measurement of air flow is made by a pressure difference measurement with a separate measuring tube. Refer to air flow measurement diagrams found in the separate installation and measurement instructions for information.

GENERAL INFORMATION

Exhaust valve KK, e.g. KK-125 are manufactured by Fläkt Woods.

PRODUCT CODE

Exhaust valve
KK-aaa

Following markings are added to the valve code if needed:
e = special colour

Size in mm (aaa)
100, 125, 150, 160, 200

For example:
KK-100-e (KK-100 with special colour)

Exhaust valve, stainless steel
KK-aaa-R

ACCESSORIES

Mounting ring with rubber gasket
KKT-aaa

Mounting ring, stainless steel
KKR-aaa
Size (aaa)
100, 125, 160

PERFORMANCE CHARTS

KK-100

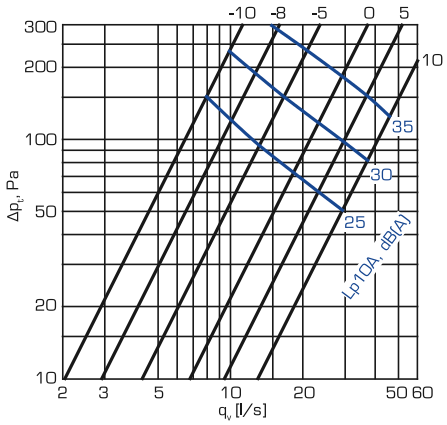

KK-125

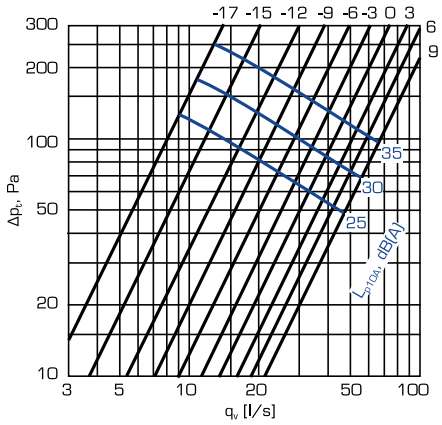

KK-150

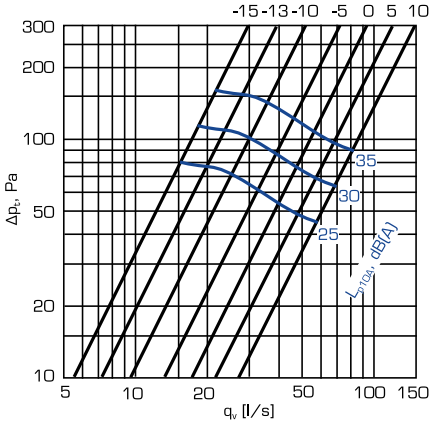

KK-160

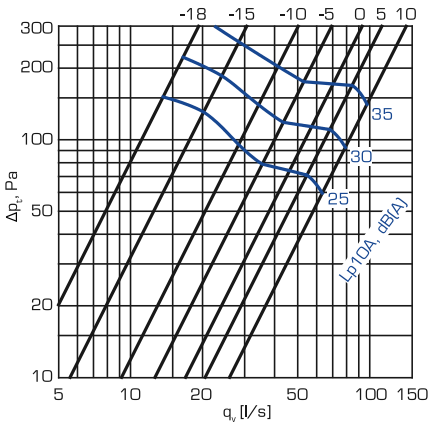

KK-200

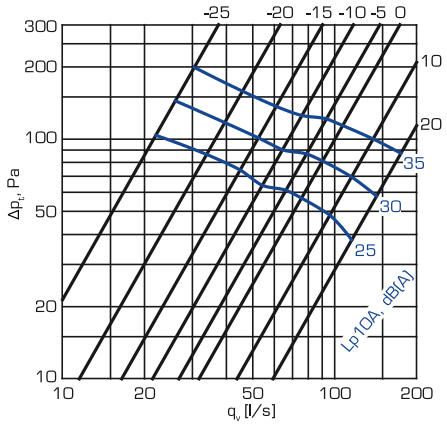

DIMENSIONS AND SOUND LEVELS

SOUND POWER LEVEL LW

KK	Correction Koct(dB), Octave bands, middle frequency, Hz						
	125	250	500	1000	2000	4000	8000
100	5	-2	-3	-3	0	-8	-20
125	-6	0	0	-3	0	-13	-25
150	-6	-5	-4	0	-1	-13	-28
160	1	-1	-3	1	-2	-15	-32
200	3	1	-1	1	-4	-12	-25
Tol +/-	3	2	2	2	2	2	3

Sound power levels by octave bands are obtained by adding to total sound pressure level Lp10A,dB(A) the corrections Koct presented in the table according to the following formula:
L Woct = L p10A + K oct

Correction Koct is average value in range of use of KE unit.

SOUND ATTENUATION ΔL

KK	Slots (mm)	Sound attenuation L(dB)Octave bands, middle frequency, Hz							
		63	125	250	500	1000	2000	4000	8000
100	-10	23	19	14	12	11	10	13	14
	0	23	16	11	8	7	6	9	8
	10	23	16	11	7	5	4	7	8
125	-17	20	19	13	10	7	7	11	14
	0	18	16	10	6	4	4	5	8
	9	19	16	9	6	3	3	5	7
150	-15	21	14	11	8	6	6	8	8
	0	20	13	9	6	4	4	7	6
	10	16	14	9	4	3	2	7	7
160	-15	18	13	11	7	6	6	8	8
	-10	18	13	10	6	5	5	7	7
	0	17	13	9	5	4	3	6	6
200	-15	17	12	8	7	6	7	8	9
	-5	17	11	7	6	5	6	6	8
	0	17	11	7	5	5	6	6	7
Tol.		6	3	2	2	2	2	2	3

The average sound attenuation L from duct to room including the end reflection of the connecting duct in ceiling installation, is obtained in the table above.

DEFINITIONS

q_v	air volume	l/s
Δp_t	total pressure drop	Pa
L_{p10A}	sound pressure level with 4 dB room attenuation (10 m^2sab)	dB(A)
L_{woct}	sound power level by octave bands	dB
ΔL	sound attenuation	dB
K_{oct}	correction	dB(A)

DIMENSIONS AND WEIGHT

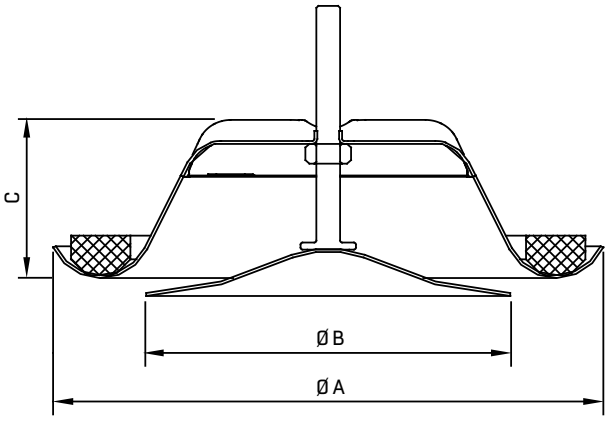

Size KK	Part Number	ØA [mm]	ØB [mm]	ØC [mm]	Weight [g]
100	**432114**	**140**	**75**	**40**	**0.16**
125	**432115**	**170**	**99**	**46**	**0.23**
150	**432116**	**202**	**119**	**54**	**0.34**
160	**432117**	**202**	**119**	**54**	**0.34**
200	**432118**	**254**	**157**	**64**	**0.51**

Mounting ring included as standard.

KKT

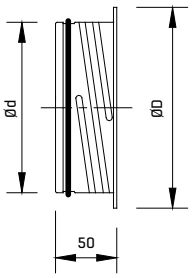

Size KKT	Part Number KKT	Pack Size	Ød [mm]	ØD [mm]	Weight KKT [g]
100	SL000115	56	99	122	75
125	SL000114	36	124	148	102
150	SL000113	24	149	175	123
160	SL000112	25	159	184	131
200	SL000111	12	199	225	165

All dimensions shown in mm

Products in **bold** are available from our UK Distributors on next day delivery, if ordered by 4pm. Please call to confirm availability on 01206 222 580.

NOTES

VALVES
EXTRACT VEF-S

PRODUCT FACTS

- Good technical performance
- Available in five sizes
- Airtight connection
- Simple installation and removal
- Easy to connect to a flexible hose
- Manufactured from recyclable plastic

GENERAL INFORMATION

VEF-S is an extract air valve which makes it suitable also for false ceilings.

APPLICATION

VEF extract air valve are circular disc valves with a valve cone of aerodynamic design. This valve possesses excellent characteristics with regard to noise level, pressure drop and air flow capacity. The design of the sound absorbent reduces the risk of cross-talk noise. The device, which is designed for wall-mounting or, alternatively, for ceiling-mounting, is available in four sizes to suit duct connections with a diameter between 100 mm and 160 mm. The design of the valve in conjunction with a Moltopren packing prevents dirtying of the ceiling and walls.

MATERIAL

The valve is made of polypropylene plastic which is recyclable and withstands temperatures up to 100°C. The materials used in the device are also resistant to most chemicals in small concentrations.

The device is supplied in white as standard. Certain special colours are available if ordered in large quantities. Galvanized steel sheet.

MAINTENANCE

The device can be wiped down with a mild detergent.

PRODUCT CODE

Exhaust air valve VEF-S manufactured by Fläkt Woods with integrated valve branch

Exhaust air valve VEF-aa-S

Size in mm
10, 12, 15, 16, 20

PERFORMANCE CHARTS

VEF-10

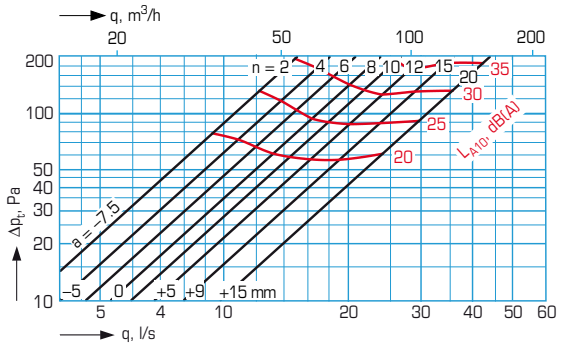

VEF-12

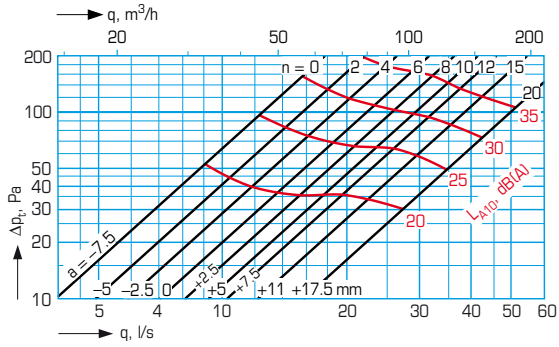

VEF-15

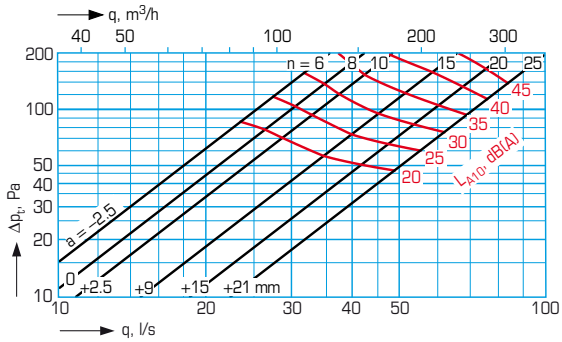

VEF-16

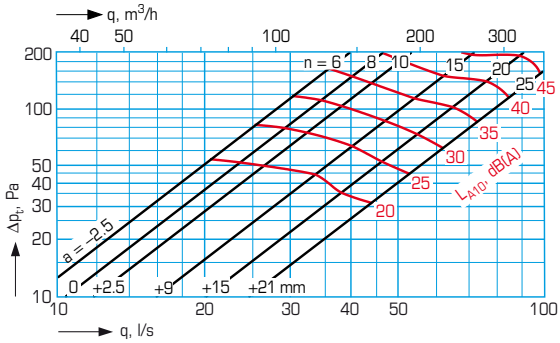

SOUND LEVELS

VEF-20

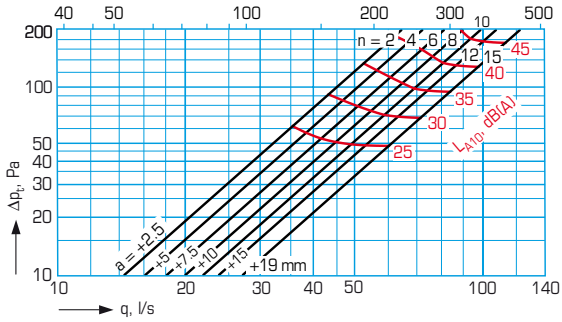

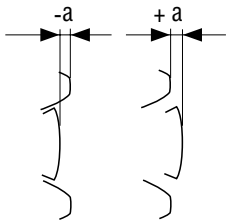

n = number of revolutions open a = slot orifice in mm

SOUND POWER LEVEL LW

Size	Correction of sound level in dB at (Hz)							
	63	125	250	500	1000	2000	4000	8000
10	22	21	15	13	11	10	6	9
12	21	19	13	11	10	10	7	9
15	20	16	12	10	9	10	8	8
16	20	16	12	10	9	10	8	8
20	17	12	7	5	4	4	7	5

SOUND ATTENUATION

Size	Correction of sound level in dB at (Hz)							
	63	125	250	500	1000	2000	4000	8000
10	–7	–6	–6	–4	–2	–1	–4	–11
12	–6	–5	–3	–4	–2	–1	–4	–13
15	1	2	1	–1	1	–4	–9	–18
16	1	2	1	–1	1	–4	–9	–18
20	1	2	4	0	–1	–4	–10	–18

DIMENSIONS AND WEIGHTS

VEF-10 TO VEF-16

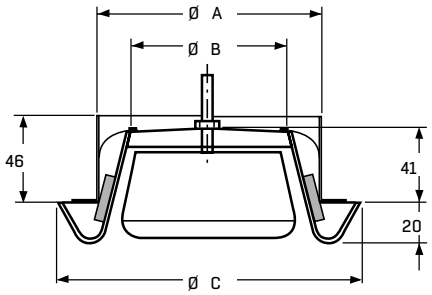

VEF-20

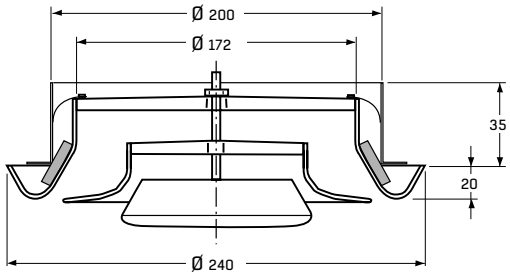

Size	Part Code	Part Number	A	B	C	Weight kg
10	VEF-S-100	SL000105	100	70	145	0.12
12	VEF-S-125	SL000104	125	95	160	0.16
15	VEF-S-150	SL000103	150	116	190	0.22
16	VEF-S-160	SL000102	160	125	200	0.26
20	VEF-S-200	SL000101	200	172	240	0.34

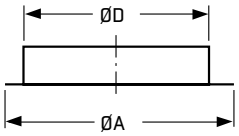

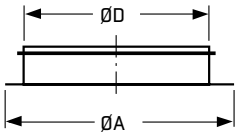

Size	A	D	Weight kg	Hole size
10	127	100	0,09	Ø110
12	152	125	0,11	Ø135
15	177	150	0,13	Ø160
16	187	160	0,15	Ø170
20	227	200	0,18	Ø210

All dimensions shown in mm.

Products in **bold** are available from our UK Distributors on next day delivery, if ordered by 4pm. Please call to confirm availability on 01206 222 580.

NOTES

NOZZLES
DK / DR

PRODUCT FACTS

- Nozzle devices DK (Short Nozzle) & DR (Long Nozzle)
- Intended for installation in a connection box, in a duct or behind a wall
- Adjustable diffusion pattern
- Suitable for public premises
- Broad flow range and low sound level

GENERAL INFORMATION

DK and DR nozzle devices are intended for public premises with a large room volume. The long throw gives very effective air diffusion.

The devices, which are made of aluminium, have an adjustable diffusion angle of 30 degrees.

All types, are available in two installation alternatives: for assembling on flat surface or at the end of circular duct.

The nozzles can be used individually or in series for an extra high overall efficiency.

The devices are suitable for premises such as entertainment premises, market halls, sports halls, lecture halls, industrial buildings, etc. The low overall sound level also means that the devices can be used in concert halls, conference premises, television and/or radio studios.

Devices with a short nozzle (DK) can be supplied with and without a painted finish.

Devices with a long nozzle (DR) can be supplied in three different surface finishes, unpainted, painted or anodized aluminium. All devices can be supplied painted in an optional RAL colour. The device can be wiped down with a mild detergent.

PRODUCT CODE

- Nozzle devices
- DK, DR
- Intended for installation in a connection box, in a duct or behind a wall
- Adjustable diffusion pattern
- Suitable for public premises
- Broad flow range and low sound level

PRODUCT CODE EXAMPLE:

Nozzle device DKBA-08-3.

Device of size 08 dedicated for mounting on flat surface, painted in colour RAL 9010.

AIR FLOW, THROW, PRESSURE DROP, SOUND LEVELS

NOZZLE DEVICE DK, DR

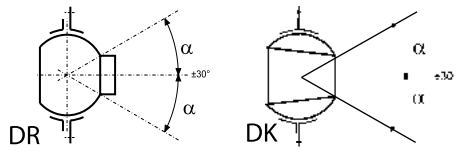

SIZE 04 – THROW

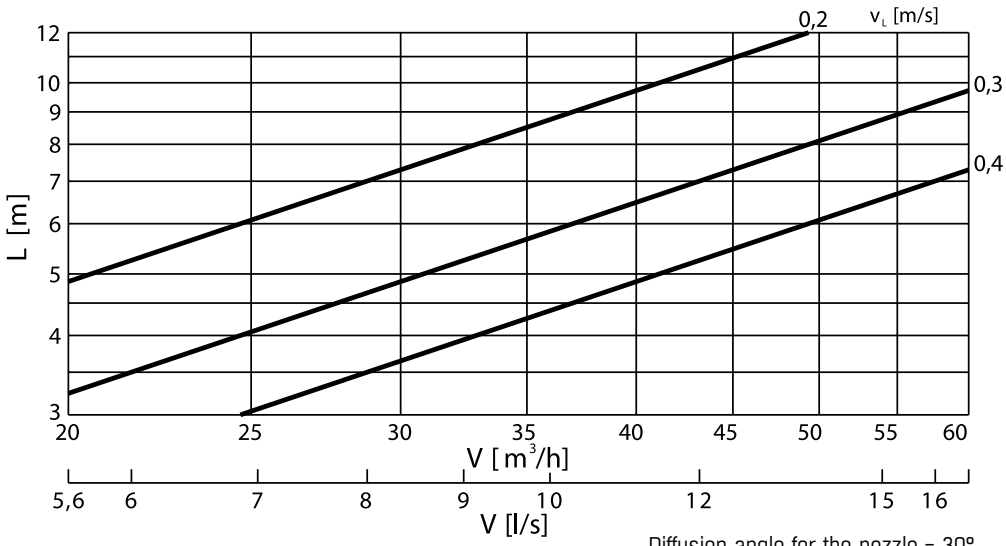

Diffusion angle for the nozzle = 30°

Installation height, min - max = 2.8 - 3.1 m

Min distance between devices = 120 mm

SIZE 04 – PRESSURE DROP AND SOUND LEVEL

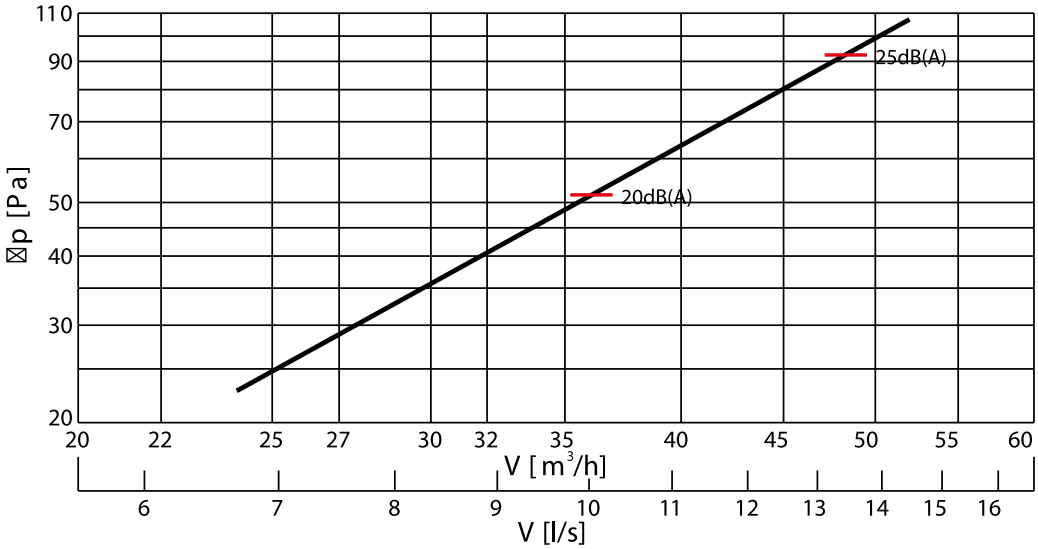

In the above graph, the sound levels in dB(A) are indicated for a reference room with 10 m² room absorption, equivalent to 4 dB room attenuation.

AIR FLOW, THROW, PRESSURE DROP, SOUND LEVELS

NOZZLE DEVICE DK, DKOA, DR

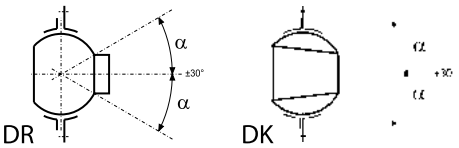

SIZE 05 – THROW

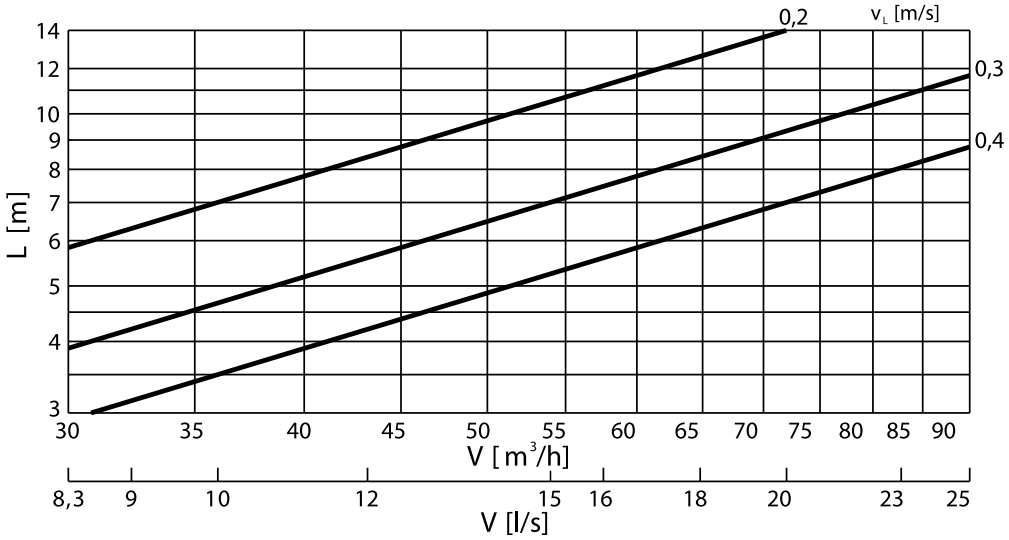

SIZE 05 – PRESSURE DROP AND SOUND LEVEL

Diffusion angle for the nozzle = 30°

Installation height, min - max = 2.4 - 3.2 m

Min distance between devices = 150 mm

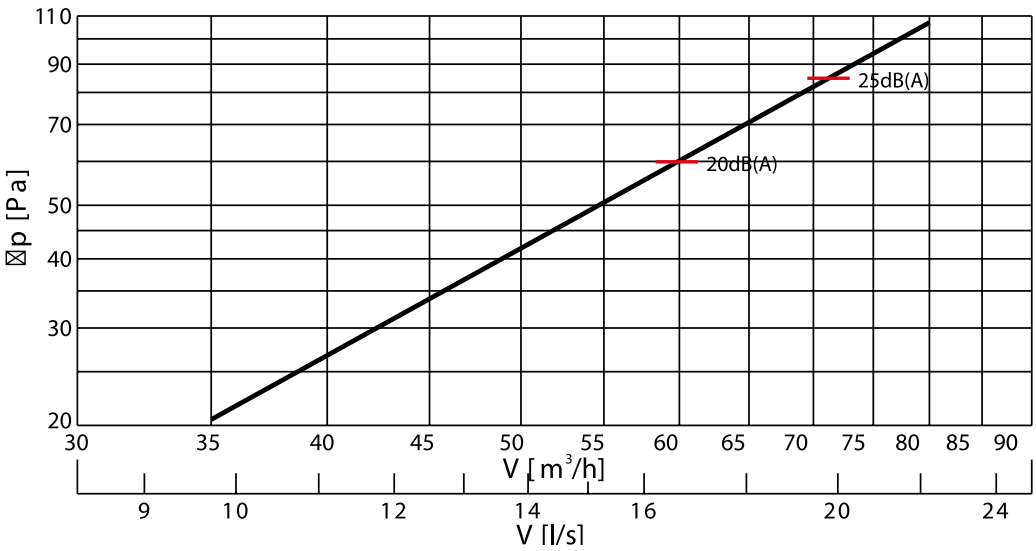

In the above graph, the sound levels in dB(A) are indicated for a reference room with 10 m² room absorption, equivalent to 4 dB room attenuation.

AIR FLOW, THROW, PRESSURE DROP, SOUND LEVELS

NOZZLE DEVICE DK, DR

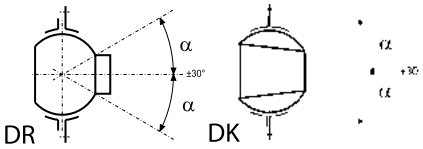

SIZE 08 – THROW

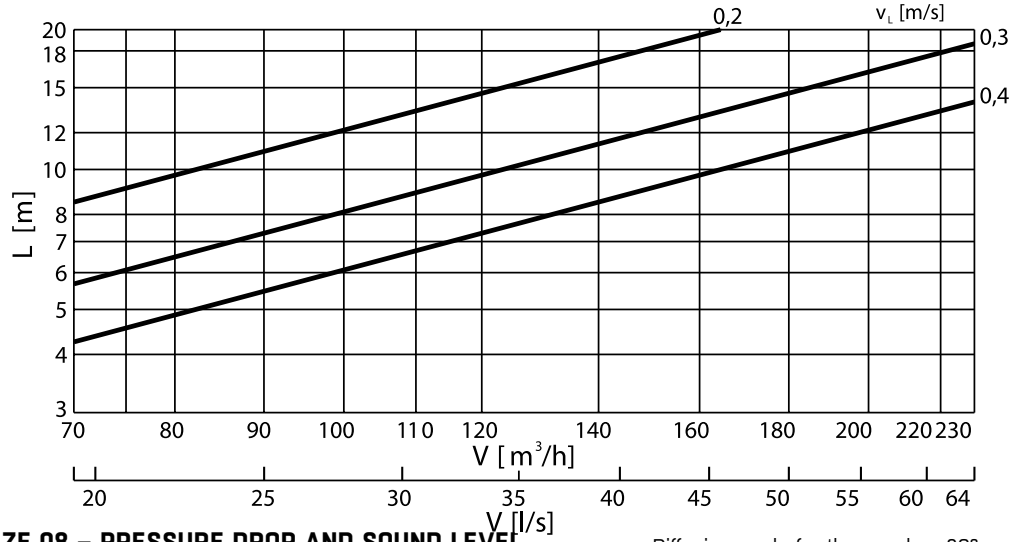

SIZE 08 – PRESSURE DROP AND SOUND LEVEL

Diffusion angle for the nozzle = 30°

Installation height, min - max = 2.9 - 4.2 m

Min distance between devices = 240 mm

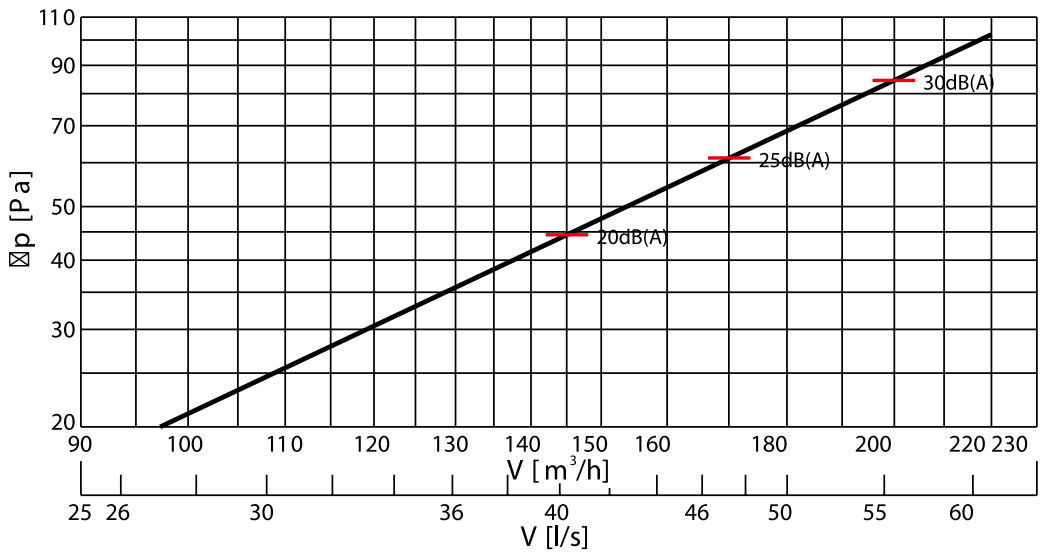

In the above graph, the sound levels in dB(A) are indicated for a reference room with 10 m² room absorption, equivalent to 4 dB room attenuation.

AIR FLOW, THROW, PRESSURE DROP, SOUND LEVELS

NOZZLE DEVICE DK, DKOA, DR

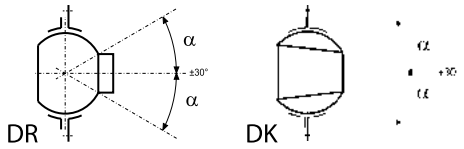

SIZE 12 – THROW

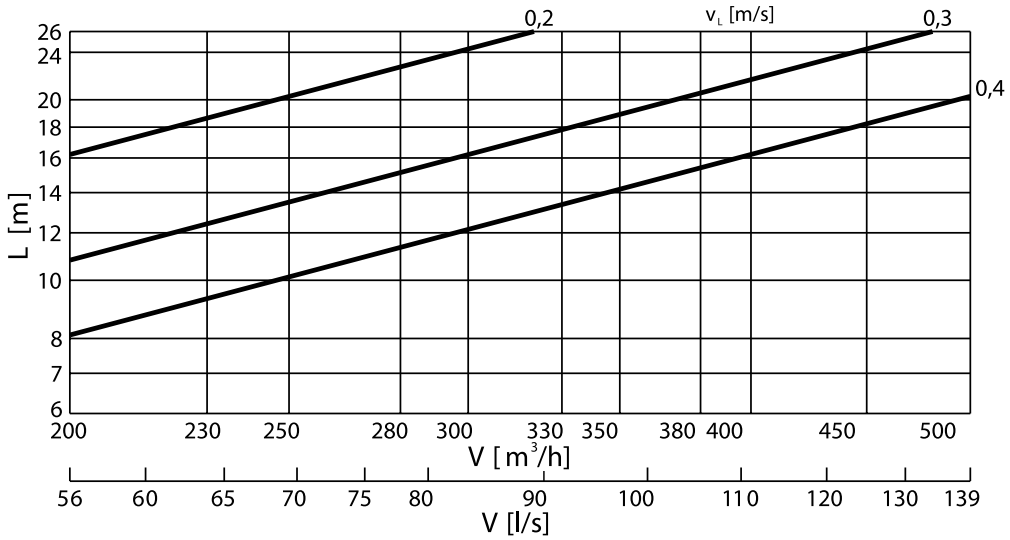

SIZE 12 – PRESSURE DROP AND SOUND LEVEL

Diffusion angle for the nozzle = 30°

Installation height, min - max = 3.1 - 6.5 m

Min distance between devices = 360 mm

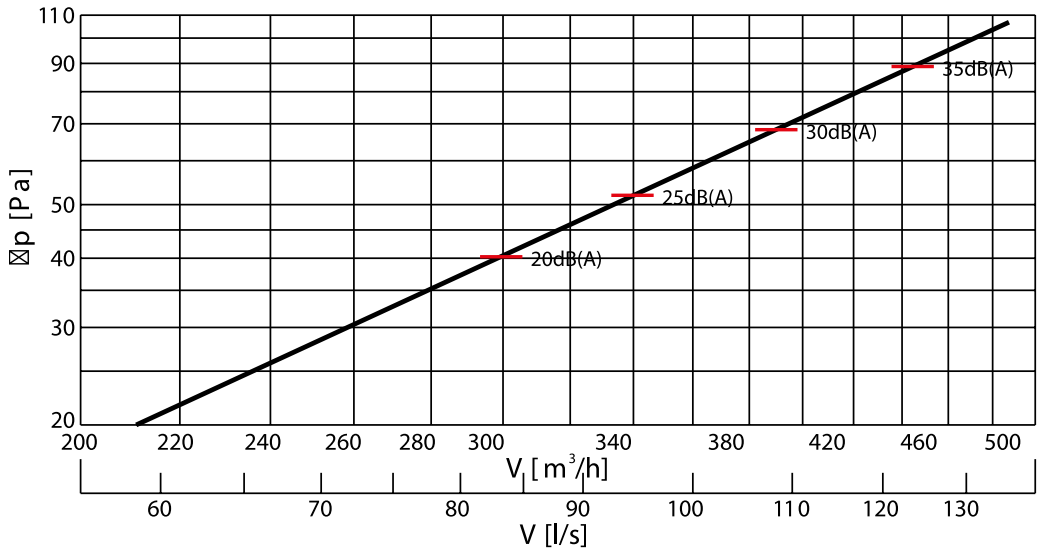

In the above graph, the sound levels in dB(A) are indicated for a reference room with 10 m² room absorption, equivalent to 4 dB room attenuation.

AIR FLOW, THROW, PRESSURE DROP, SOUND LEVELS

NOZZLE DEVICE DK, DR

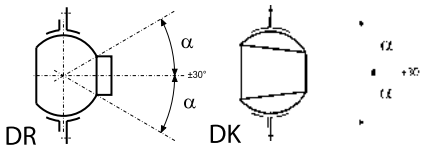

SIZE 15 – THROW

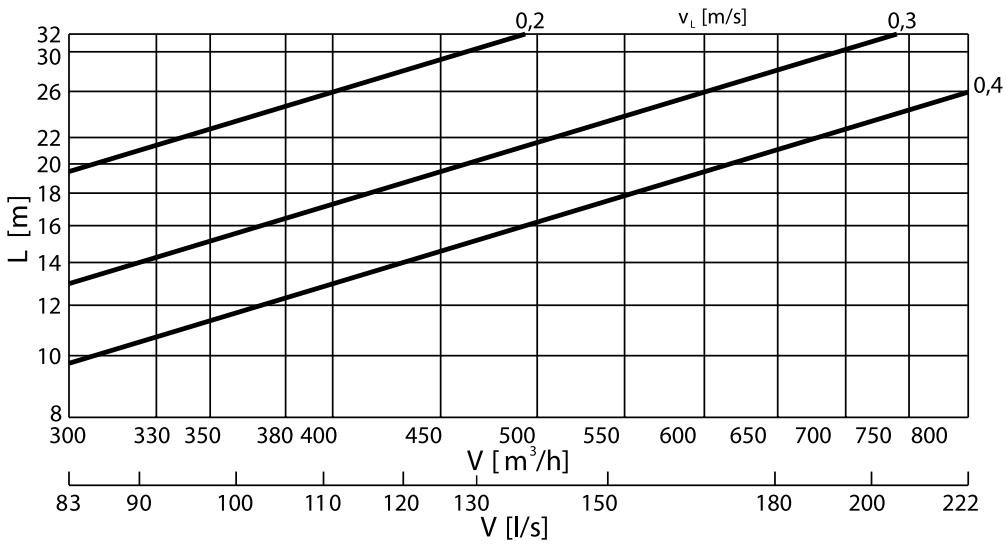

SIZE 15 – PRESSURE DROP AND SOUND LEVEL

Diffusion angle for the nozzle = 30°

Installation height, min - max = 3.3 - 8.5 m

Min distance between devices = 450 mm

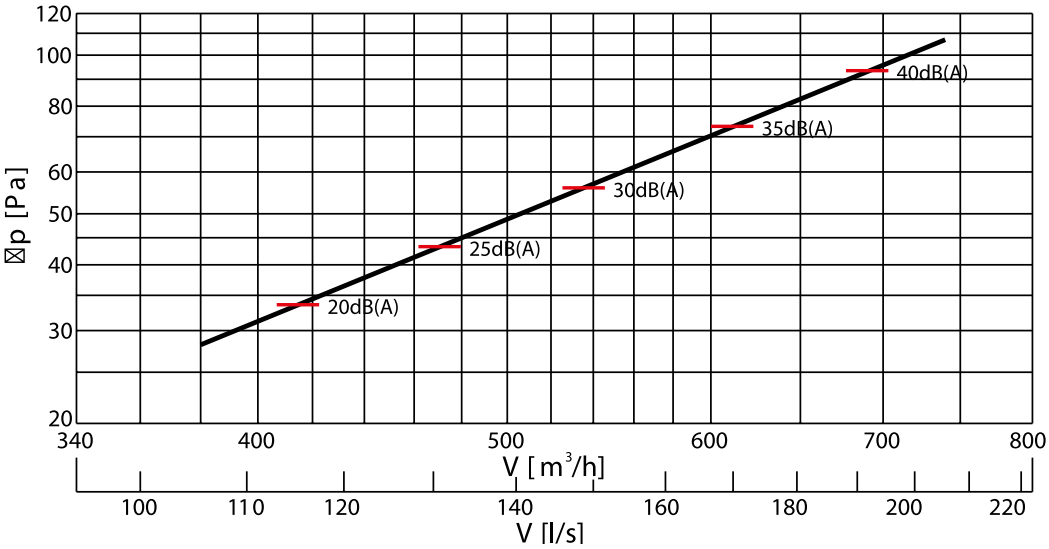

In the above graph, the sound levels in dB(A) are indicated for a reference room with 10 m² room absorption, equivalent to 4 dB room attenuation.

AIR FLOW, THROW, PRESSURE DROP, SOUND LEVELS

NOZZLE DEVICE DK, DKOA, DR

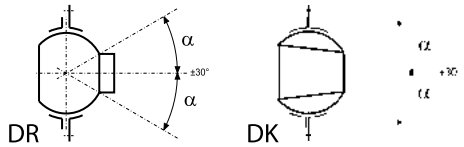

SIZE 20 – THROW

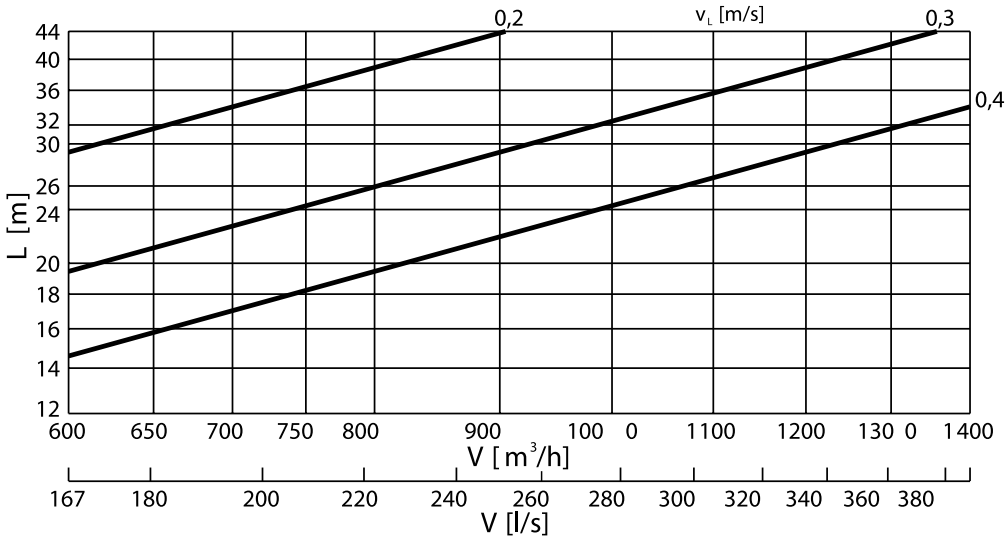

SIZE 20 – PRESSURE DROP AND SOUND LEVEL

Diffusion angle for the nozzle = ±30°

Installation height, min - max = 3.7 - 10.5 m

Min distance between devices = 550 mm

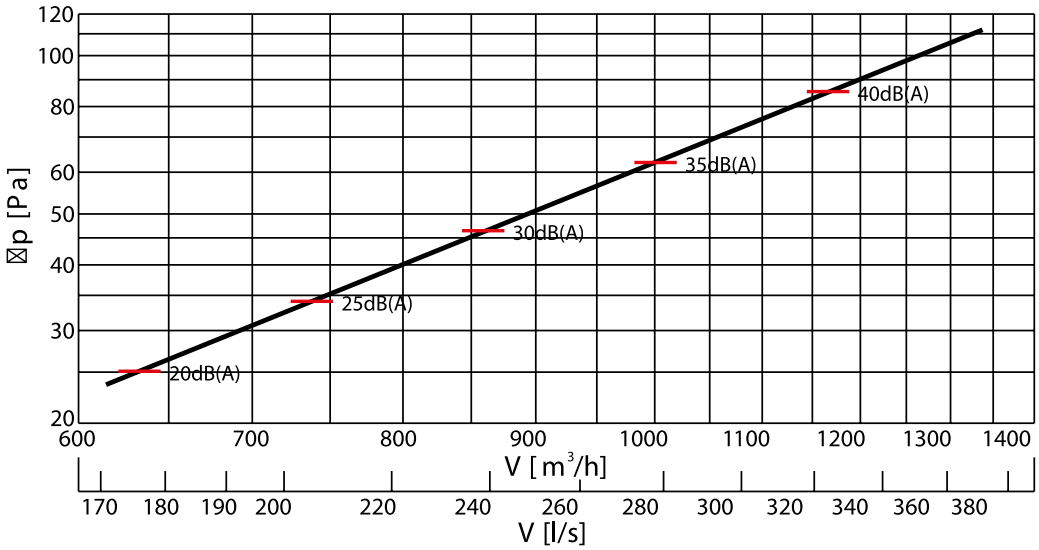

In the above graph, the sound levels in dB(A) are indicated for a reference room with 10 m² room absorption, equivalent to 4 dB room attenuation.

THROW, DIFFUSION PATTERN

THROW FOR HEATING AND COOLING FUNCTION

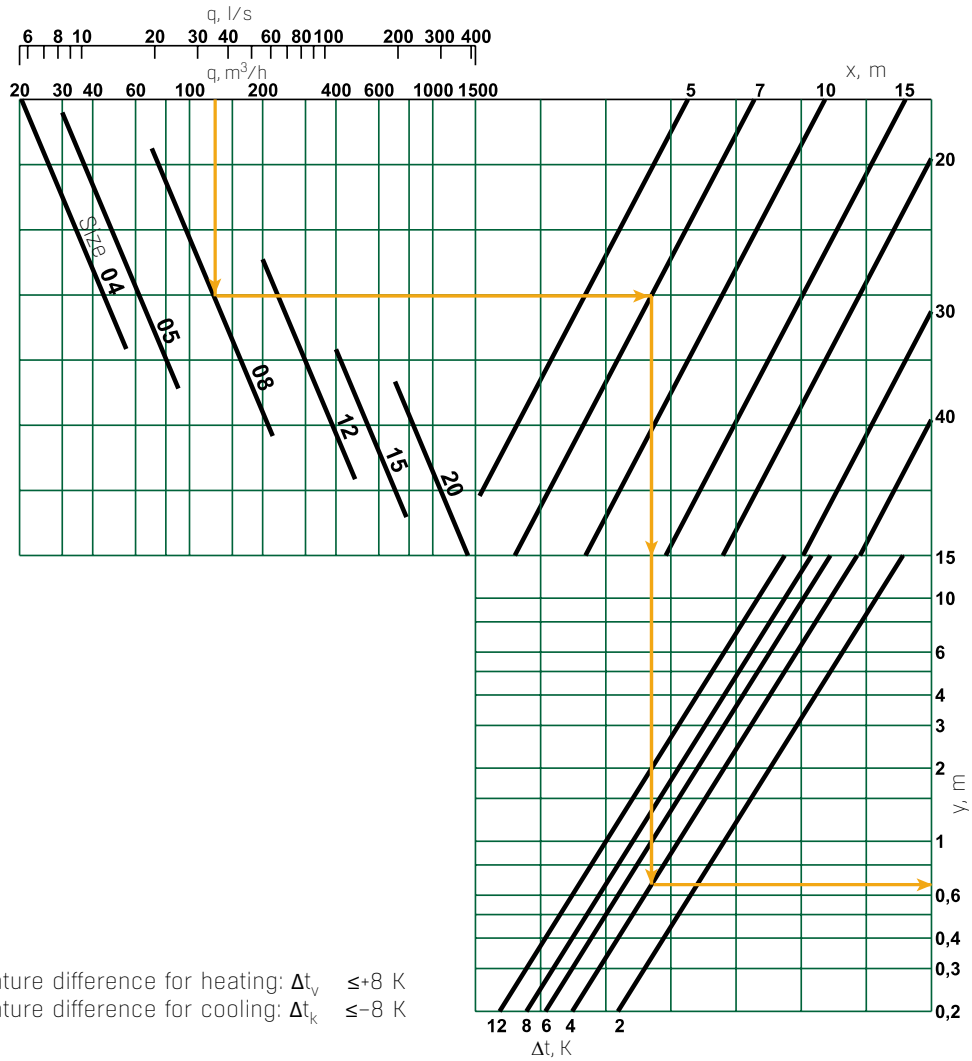

Max temperature difference for heating: Δt_v ≤+8 K
Max temperature difference for cooling: Δt_k ≤−8 K

THROW, DIFFUSION PATTERN

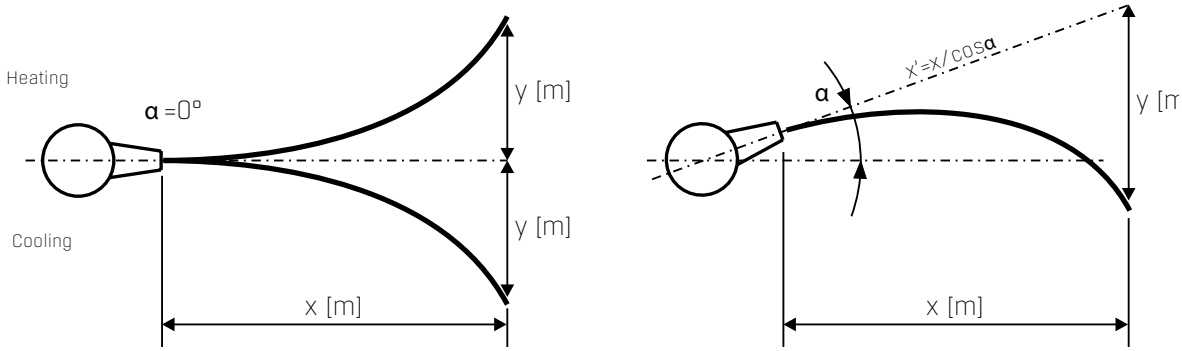

ACOUSTICAL DATA, INSTALLATION ALTERNATIVE

DEFINITIONS

q	air flow	l/s, m³/h
Δp_t	total pressure drop	Pa
L	throw at v_L	m
L_{A10}	sound pressure level with room attenuation of 4 dB (10 m2 room absorption area)	dB(A)
L_W	sound power level	dB
K_{ok}	octave band correction	dB
v_L	velocity at jet axis	m/s

The sound power levels for different octave bands are obtained by adding together the sound pressure level LA10, dB(A), and the octave band correction K_{ok} in the table with the help of the following formula

$$L_W = L_{A10} + K_{ok} + K_2$$

Correction factor Kok when the angle of inclination of the nozzle α = 15°

Size	Correction Koct(dB), Octave bands, middle frequency, Hz							
	63	125	250	500	1000	2000	4000	8000
04	1	0	-6	0	-5	-5	-9	-13
05	6	5	0	-3	-4	-4	-10	-15
08	7	6	1	-2	-3	-7	-12	-17
12	5	4	-2	-1	-3	-4	-14	-20
15	7	6	-1	0	-5	-8	-17	-24
20	4	3	2	-2	-2	-10	-16	-24

Correction factor Kok when the angle of inclination of the nozzle α = 30°

Size	04	05	08	12	15	20
K_2	2	2	4	4	4	3

Correction factor K of throw for DR nozzle

Size	K
04	0.93
05	0.93
08	0.93
12	0.93
15	0.98
20	0.95

$$L^1_{0,2} = L_{0,2} \times K$$

INSTALLATION ALTERNATIVES

NOZZLE DEVICE DK

Device installed at the end of circular duct - DKBA

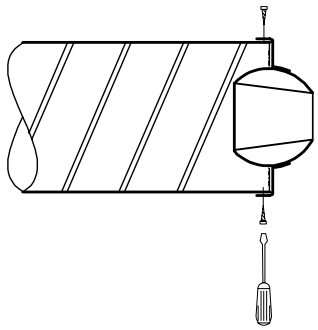

NOZZLE DEVICE DR

Device installed at the end of circular duct - DRBA

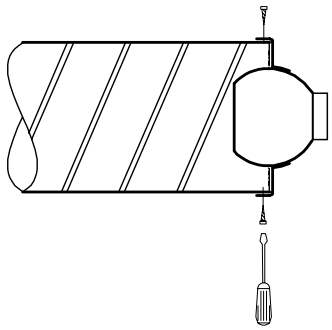

DRAWING AND DIMENSIONS

NOZZLE DEVICE INSTALLED AT THE END OF CIRCULAR DUCT - DKBA

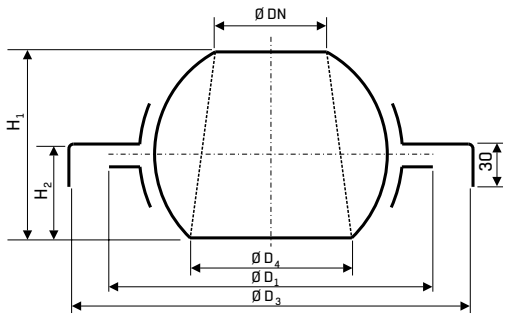

Size (ØDN)	Product Code	Part Number	$ØD_1$	$ØD_3$	$ØD_4$	H_1	H_2
04	DKBA-04-12-1	SL400049	118	129	53	82	35
05	DKBA-05-16-1	SL400050	145	164	62	92	45
08	DKBA-08-25-1	SL400051	202	254	100	148	74
12	DKBA-12-31-1	SL400052	300	319	150	221	113
15	DKBA-15-40-1	SL400053	360	404	186	276	138
20	DKBA-20-50-1	SL400054	468	504	240	367	180

NOZZLE DEVICE INSTALLED AT THE END OF CIRCULAR DUCT - DRBA

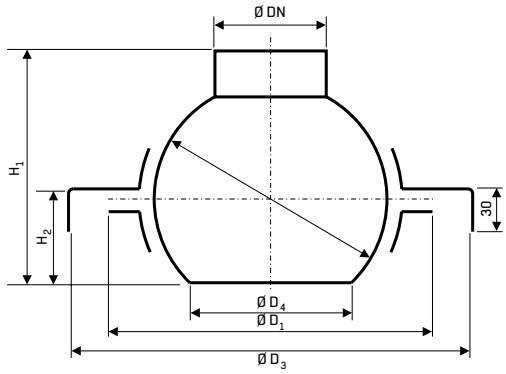

Size (ØDN)	Part Number	Part Number	$ØD_2$	$ØD_3$	$ØD_1$	H_1	H_2
04	DRBA-04-12-1	SL400055	118	129	53	102	35
05	DRBA-05-16-1	SL400056	145	164	62	112	45
08	DRBA-08-25-1	SL400057	202	254	100	188	74
12	DRBA-12-31-1	SL400058	300	319	150	261	113
15	DRBA-15-40-1	SL400059	360	404	186	336	138
20	DRBA-20-50-1	SL400060	468	504	240	427	180

All dimensions in mm.

LOUVRES / COWLS
EYMA, DYMA

PRODUCT FACTS

- EYMA - Exhaust Diffuser
- EYMA exhausts air straight up at a high velocity, protecting the diffuser against settling dust and other impurities preventing the warm exhaust air from melting snow around the diffuser.
- DYMA - Air Intake Device
- DYMA, pressure drops and sound power levels remain low.
- DYMA are determined based on EN 13030:2001

PROPERTIES

An air intake device supplying the premises with fresh air and an exhaust air diffuser discharging the exhaust air are often the only visible signs of a building's ventilation system.

The air intake device DYMA-1 and the improved exhaust air diffuser EYMA-2 are designed to be placed on the roof of modern buildings, and they match the architecture and design language of today perfectly.

MATERIAL AND SURFACE FINISH

The structural material of both air intake device and exhaust air diffuser is steel sheet with aluminium-zinc alloy coating. The mass of the AlZ coating is AZ 150g/m² (EN 10327). Under conditions of the environment category C3 (ISO 9223), the material is designed to comply with its estimated life expectancy. At request, the air intake device and the exhaust air diffuser can also be ready-painted in good-quality factory surroundings in an optional RAL colour.

CONSTRUCTION AND FINISH

Due to the special design of the EYMA inner cone, the rain water cannot enter the ventilation system even at times when the exhaust function is off. The rain water has a free exit onto to the roof through the gap between protective plate and casing. If the water content of the exhaust air is exceptionally high and exhaust air flow small, freezing may occur in extremely cold weather conditions.

The purpose of the DYMA air intake device is to bring fresh air into the ventilation system at a low enough velocity, preventing rain water from entering the device with the air flow. This is only possible, if the correct device size is selected according to the table of dimensions and the pressure drop diagrams.

Due to the excellent design of the internal parts of The purpose of the EYMA exhaust air diffuser is to exhaust the air straight up at a high velocity. This will prevent odours and impurities from settling near the diffuser, as well as the warm exhaust air from melting eventual snow on the surrounding roof area.

INSTALLATION

Exhaust air diffuser EYMA and air intake device DYMA are normally installed at the end of a penetration made of building material. The junction must be absolutely waterproof. The placement of exhaust air diffuser and air intake device must be carried out according to the national regulations, regarding e.g. the distance from roof surface. DYMA takes in part of the air under the lower edge of the casing.

PRODUCT CODE

Exhaust air diffuser	EYMA-2 - aaa-b-c
Air intake device	DYMA-1 - aaa-b-c

Size (aaa)
012-125

Material (b)

1 = AlZn-coated
2 = Acid proof AISI 316
3 = painted

Connection (c)

1 = Veloduct (standard delivery sizes 012 ... 040)
2 = flange (standard delivery sizes 050 ... 125)
3 = flange and counter flange

Veloduct connections should be selected for sizes 012 - 040.
Flange and counter flange (EBGA) for sizes 050 - 125

DIMENSIONS, WEIGHTS AND RECOMMENDATIONS ON AIR FLOW

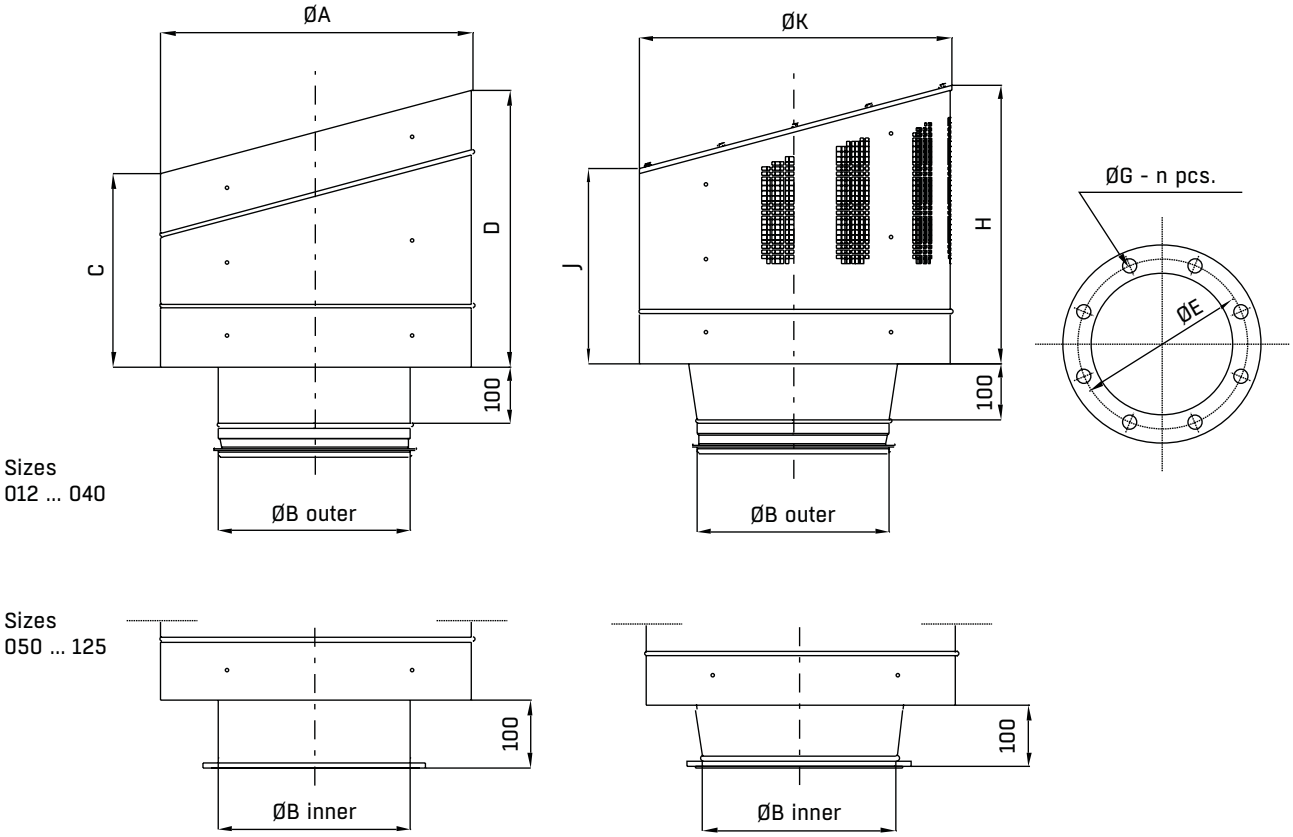

aaa	ØA	ØB	C	D	ØK	J	H	EYMA-2 Product Number	EYMA-2 weight kg	DYMA-1 weight kg	DYMA-1 max. q_v	DYMA-1 Product Number	Flange ØE	Flange ØG	Flange n
12	205	125	135	190	260	170	240	SL400027	2.3	3.1	0.06	SL400038	-	-	-
16	210	160	170	240	330	210	300	SL400028	3.4	4.4	0.11	SL400039	-	-	-
20	325	200	210	300	410	260	370	SL400029	4.7	6.6	0.19	SL400040	-	-	-
25	405	250	260	370	510	330	470	SL400030	7.1	9.5	0.30	SL400041	-	-	-
31	510	315	330	470	580	370	520	SL400031	10.7	13.3	0.40	SL400042	-	-	-
40	650	400	410	590	730	470	660	SL400032	16.5	19.3	0.85	SL400043	-	-	-
50	810	500	515	730	910	580	820	SL400033	31.0	35.5	1.30	SL400044	560	12	12
63	1025	630	640	920	1150	760	1060	SL400034	50.0	56.3	1.80	SL400045	690	12	12
80	1300	800	1000	1210	1460	960	1360	SL400035	83.0	95.0	3.00	SL400046	860	12	16
100	1620	1000	1190	1540	1820	1230	1720	SL400036	145.0	178.0	4.60	SL400047	1070	15	16
125	2030	1250	1400	1900	2270	1510	2120	SL400037	248.0	28.0	7.40	SL400048	1320	15	20

All dimensions in mm.

Products in **bold** are available from our UK Distributors on next day delivery, if ordered by 4pm. Please call to confirm availability on 01206 222 580.

TECHNICAL DATA EYMA-2

PRESSURE DROP, SOUND DATA EYMA-2

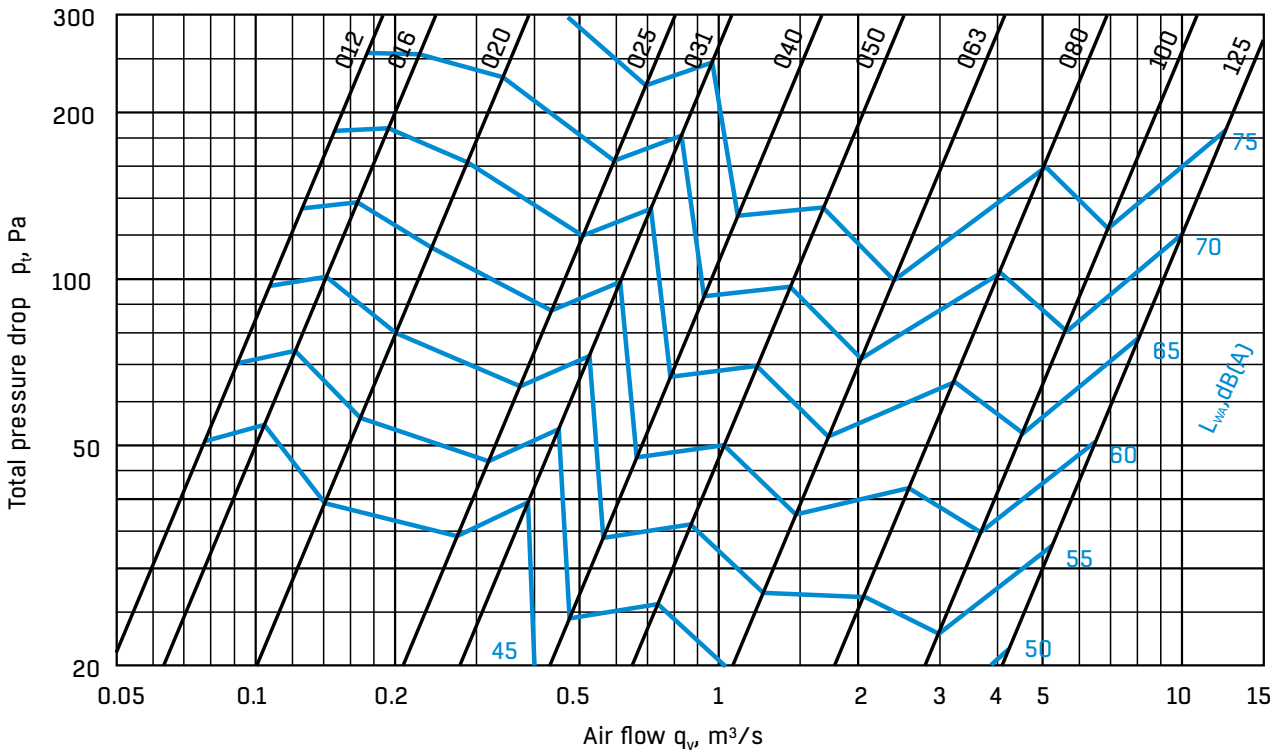

SOUND POWER LEVELS L_{WOCT}

Size	Correction Koct (dB) Octave band mid-frequency (Hz)							
	3	125	250	500	1000	2000	4000	8000
12	-4	2	4	1	0	-5	-14	-21
16	-7	0	1	0	1	-4	-13	-23
20	-4	2	3	3	0	-7	-16	-25
25	0	3	3	1	0	-6	-16	-26
31	-2	3	3	3	0	-10	-19	-25
40	-8	-4	0	0	-7	-16	-24	-33
50	-6	-3	1	0	-6	-17	-24	-31
63	-6	-3	2	1	-8	-18	-25	-30
80	-9	-6	4	-4	-13	-20	-25	-31
100	-7	-1	3	-1	-10	-16	-25	-27
125	2	6	4	-3	-9	-15	-22	-25

The sound power levels in octave bands are obtained by adding the correction factor K_{oct} in the table to the total sound power level L_{WA}, dB(A) according to the following formula:

$$L_{Woct} = L_{WA} + K_{oct}$$

is an average in the operating range of EYMA-2.

SOUND PRESSURE LEVEL L_{PA}

Distance L (m)	1	3	5	10	15	20	25	30	40
Attenuation ΔL (dB)	7	17	22	28	31	34	36	37	40

Total sound pressure level to the surroundings can be estimated for different distances by using the formula below:

$$L_{pA} = L_{WA} - \Delta L$$

TECHNICAL DATA DYMA-1

PRESSURE DROP, SOUND DATA DYMA-1

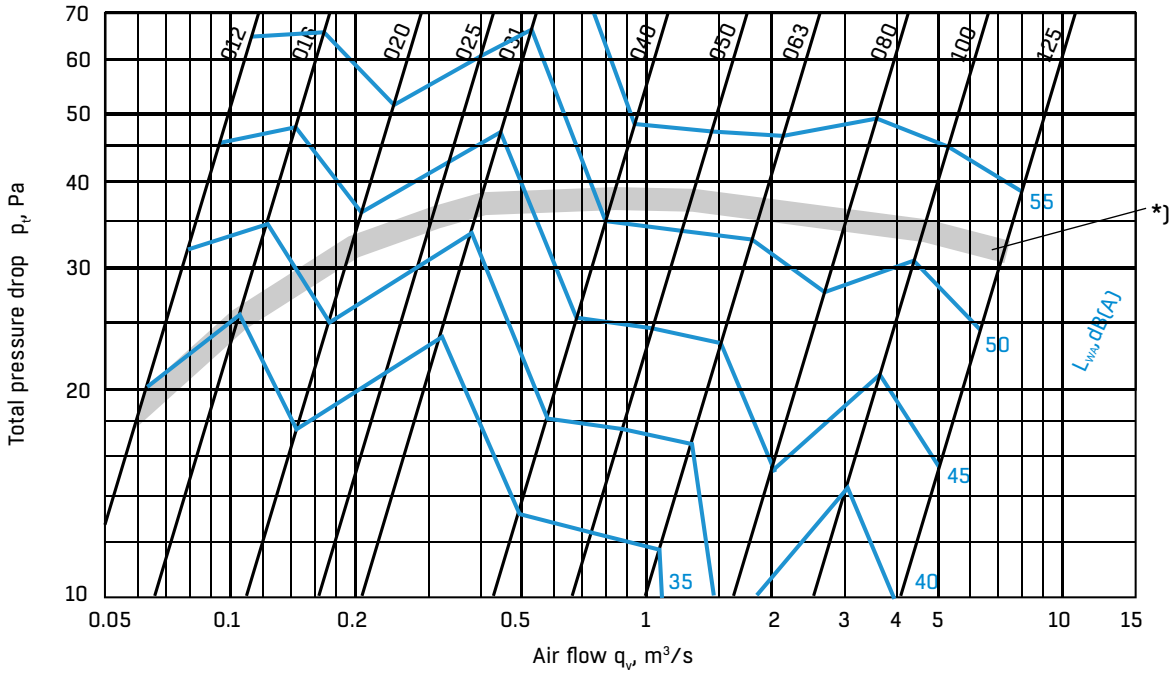

*] Max. air flow

SOUND POWER LEVELS L_{WOCT}

Size	Correction Koct (dB) Octave band mid-frequency (Hz)							
	3	125	250	500	1000	2000	4000	8000
12	-4	-3	3	4	-1	-9	-20	-22
16	-1	3	5	2	0	-8	-18	-26
20	-1	5	5	3	-1	-8	-17	-25
25	-1	1	4	3	0	-8	-17	-27
31	1	5	4	3	-1	-10	-19	-26
40	4	4	2	0	-7	-15	-21	-31
50	5	3	3	0	-6	-14	-20	-25
63	5	2	3	-1	-7	-14	-20	-23
80	6	2	3	-1	-7	-12	-17	-22
100	3	2	1	-1	-4	-6	-9	-11
125	6	3	0	-4	-6	-10	-12	-13

The sound power levels in octave bands are obtained by adding the correction factor K_{oct} in the table to the total sound power level L_{WA}, dB(A) according to the following formula:

$$L_{Woct} = L_{WA} + K_{oct}$$

Correction K_{oct} is an average in the operating range of DYMA-1.

SOUND PRESSURE LEVEL L_{PA}

Distance L (m)	1	3	5	10	15	20	25	30	40
Attenuation ΔL (dB)	7	17	22	28	31	34	36	37	40

Total sound pressure level to the surroundings can be estimated for different distances by using the formula below:

$$L_{pA} = L_{WA} - \Delta L$$

EFFICIENCY OF RAINWATER REJECTION

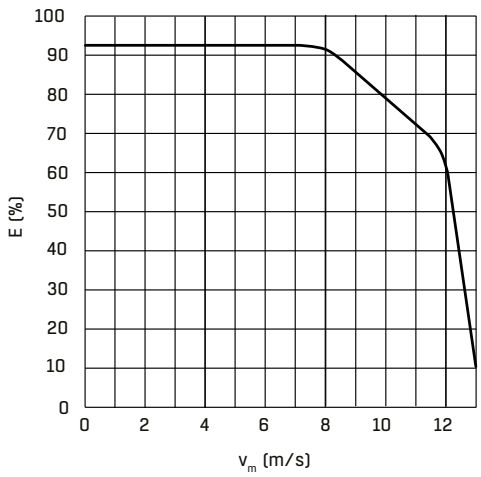

EXTERNAL LOUVRES
USAV

PRODUCT FACTS

- Circular louvre moulded in aluminium for air supply and exhaust openings
- Sizes from 80-400

SIZES

80, 100, 125, 150, 160, 200, 250, 315 and 400 mm

APPLICATION

External louvres are used as covering grilles in air supply and exhaust openings.

CONSTRUCTION

USAV is made of moulded aluminium. All external louvres are equipped with insect screen. With our USAV insect screen has to be removed in mechanical ventilation.

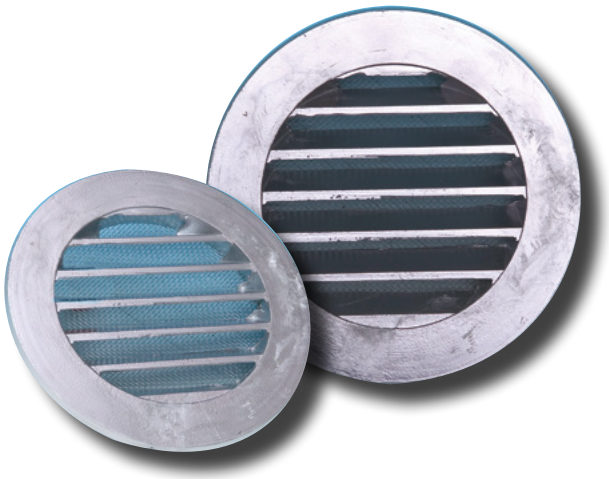

PRODUCT CODE

Round external louvre, moulded

USAV-aaa

Size in mm (aaa)

Following markings are added to the valve code if needed:

E = special colour
IV = mesh for mechanical ventilation
Round external louvre, deep drawn

PERFORMANCE DATA

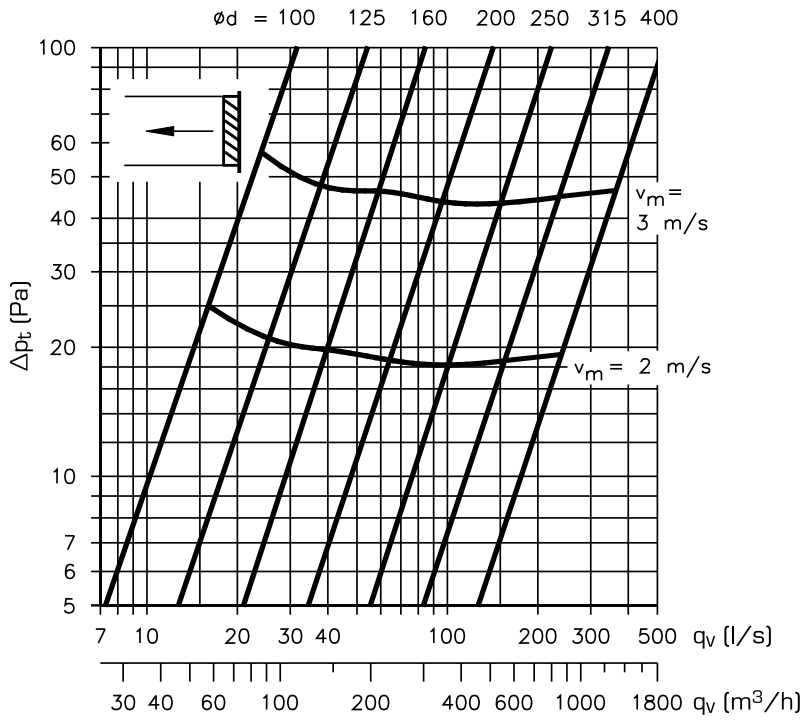

DIMENSIONS AND WEIGHTS

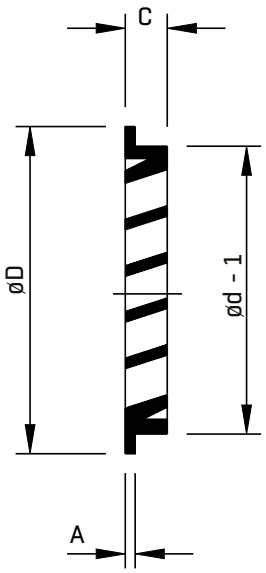

Size	Product Code	Product Number	ØD	Ød	A	C	Weight (g)
80	USAV-80	400699	101	80	3	14	115
100	**USAV-100**	**400700**	**132**	**100**	**3**	**25**	**165**
125	**USAV-125**	**400701**	**152**	**125**	**3**	**25**	**235**
150	**USAV-150**	**400702**	**181**	**150**	**3**	**25**	**360**
160	USAV-160	400703	189	160	3	25	410
200	**USAV-200**	**400704**	**231**	**200**	**3**	**25**	**490**
250	**USAV-250**	**440033**	**278**	**250**	**3**	**28**	**740**
315	**USAV-315**	**400706**	**350**	**315**	**7**	**23**	**1940**
400	USAV-400	400707	439	400	7	25	2900

All dimensions shown in mm

Products in **bold** are available from our UK Distributors on next day delivery, if ordered by 4pm. Please call to confirm availability on 01206 222 580.

CASED AXIAL ACCESSORIES

JM MATCHING FLANGE AND FLEXIBLE CONNECTOR

Suitable for fan ØA	Product Number		C	Weight (kg)	
	Matching Flange	Flexible Connector		Matching Flange	Flexible Connector
315	**408238**	**AS040315**	**110**	**1.1**	**3.3**
355	**501351**	**AS040355**	**110**	**1.3**	**3.9**
400	**074913**	**AS040400**	**110**	**1.5**	**4.5**
450	**501353**	**AS040450**	**110**	**1.7**	**5.0**
500	**074914**	**AS040500**	**110**	**2.0**	**5.5**
560	**501355**	**AS040560**	**110**	**2.3**	**6.9**
630	**074915**	**AS040630**	**160**	**3.0**	**7.5**
710	**074916**	**AS040710**	**160**	**3.2**	**8.1**
800	**74917**	**AS040800**	**160**	**3.6**	**9.1**
900	**404841**	**AS040900**	**160**	**4.1**	**10.4**
1000	**74918**	**AS041000**	**165**	**4.6**	**12.4**

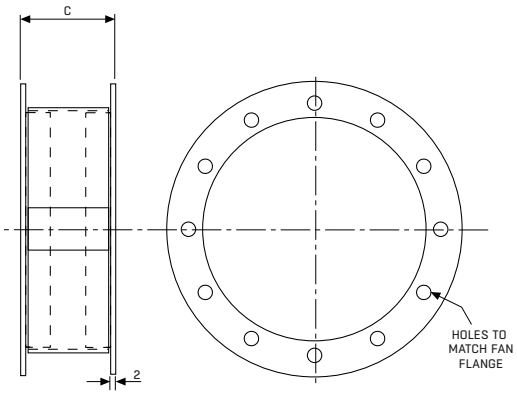

Note: Flexible connection weight includes two matching flanges. Suitable for up to 400°C emergency operation for 1 hours and 200°C continuous.

JM MOUNTING FEET (SET OF 2)

Product Code	Max Motor Frame	Product Number	G	L	M	N	P	T	V	W	Weight Kg
315	**80**	**408199**	**175**	**265**	**315**	**10**	**200**	**10**	**20**	**60**	**1.6**
355	**80**	**408200**	**200**	**305**	**355**	**10**	**225**	**10**	**20**	**60**	**2.2**
400	**80**	**408201**	**225**	**350**	**400**	**10**	**250**	**12**	**20**	**60**	**2.4**
450	**100**	**408202**	**255**	**400**	**450**	**10**	**280**	**12**	**20**	**60**	**3.0**
500	**112**	**408203**	**290**	**450**	**500**	**10**	**315**	**12**	**25**	**65**	**4.0**
560	**112**	**408204**	**330**	**510**	**560**	**10**	**355**	**12**	**25**	**65**	**4.6**
630	**100**	**243495**	**375**	**580**	**630**	**10**	**400**	**12**	**25**	**65**	**4.8**
710	**112**	**245874**	**415**	**660**	**710**	**10**	**440**	**12**	**25**	**80**	**7.0**
800	**112**	**245024**	**485**	**750**	**800**	**10**	**510**	**12**	**25**	**80**	**10.6**
800	**132**	**249468**	**485**	**750**	**800**	**12**	**510**	**12**	**25**	**80**	**10.6**
900	**112**	**249467**	**491**	**850**	**900**	**10**	**518**	**15**	**25**	**60**	**10.6**
900	**160**	**249258**	**491**	**850**	**900**	**12**	**518**	**15**	**25**	**60**	**10.6**
1000	**112**	**249464**	**605**	**950**	**1000**	**14**	**630**	**15**	**25**	**60**	**26.4**
1000	**160**	**249255**	**605**	**950**	**1000**	**14**	**630**	**15**	**25**	**60**	**26.4**

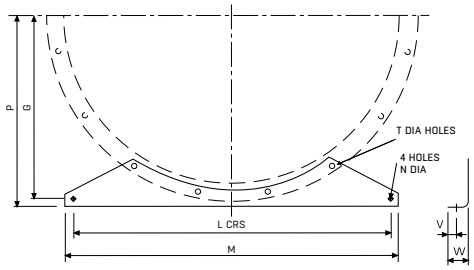

JM DAMPER

Suitable for fan ØA	Product Number	C	D	Weight (kg)
315	414942	225	–	8
355	414943	225	–	9
400	414944	225	17	10
450	414945	225	75	12
500	414473	225	75	16
560	414474	225	125	18
630	414475	225	176	20
710	414476	225	210	25
800	414477	225	266	27
900	414478	225	305	31
1000	414479	225	345	36

Note: Suitable for up to 400°C emergency operation and 200°C continuous. Product not stocked, available in 3 working weeks.

All dimensions in mm.

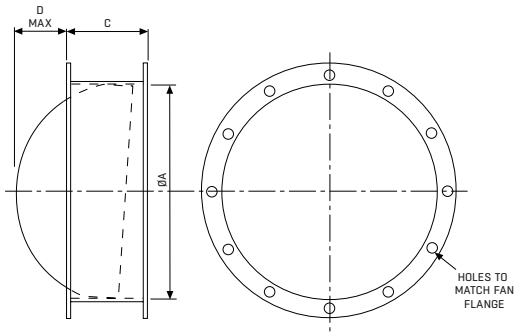

Products in **bold** are available from our UK Distributors on next day delivery, if ordered by 4pm. Please call to confirm availability on 01206 222 580.

CASED AXIAL ACCESSORIES

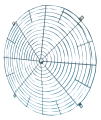

JM BELLMOUTH INLET - FAN WITH FLANGED INLET ONLY

Suitable for fan ØA	Product Number	C	Ø D	Weight (kg)
315	408593	65	387	1
355	248950	85	430	1.5
400	74880	90	482	1.5
450	248952	95	545	2
500	74881	87	606	2.9
560	248953	97	665	4.5
630	74882	108	763	4.8
710	74883	126	863	5.4
800	74884	134	962	6.8
900	404842	150	1084	8
1000	74885	167	1244	17.8

Product not stocked, available in 3 working weeks.

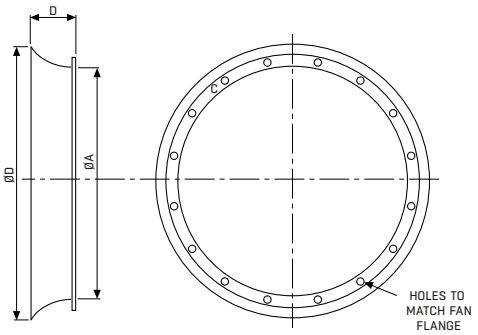

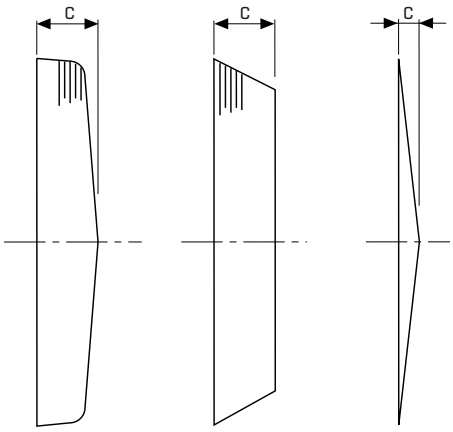

Impeller Side L and S or Motor Side S Type (BT, CT)

Motor Side S Type (112, 132 and 160)

Bellmouth and L Type Motor Side

JM GUARD

Product Number	Description	Motor Frame	Dim C	Weight Kg
248853	31JM/JMP Guard Impeller (L and S) or Motor Side (S)	BT/CT	137	1.2
248854	35JM/JMP Guard Impeller (L and S) or Motor Side (S)	BT/CT	137	1.5
248856	40JM/JMP Guard Impeller (L and S) or Motor Side (S)	BT/CT	137	1.6
248855	45JM/JMP Guard Impeller (L and S) or Motor Side (S)	BT/CT	137	2
245014	50JM/JMP Guard Impeller (L and S) or Motor Side (S)	BT/CT	137	2
245074	56JM/JMP Guard Impeller Side (L and S)	N/A	137	2.5
252452	56JM Guard M/side (S)	112 Max	200	2.4
245060	63JM Guard Impeller Side (L and S)	N/A	137	2.8
252455	63JM Guard M/side (S)	112 Max	200	3
248888	63JM Guard M/side (S)	160 Max	372	3.4
245058	71JM Guard Impeller Side (L and S)	N/A	137	3.2
248887	71JM Guard M/side (S)	160 Max	372	3.4
244460	80JM Guard Impeller Side (L and S)	N/A	137	3.5
252457	80JM Guard M/side (S)	112 Max	137	3.5
248886	80JM Guard M/side (S)	160 Max	372	3.9
245062	90JM Guard Impeller Side (L and S)	N/A	137	4.2
252233	90JM Guard M/side (S)	112 Max	200	4.2
248885	90JM Guard M/side (S)	160 Max	348	5.4
244955	100JM Guard impeller Side (L and S)	N/A	137	5
252231	100JM Guard M/side (S)	112 Max	200	5
247681	100JM Guard M/side (S)	160 Max	372	6.3
249354	31JM Guard Bellmouth and M/side (L)	N/A	30	0.5
249334	35JM Guard Bellmouth and M/side (L)	N/A	30	0.5
249355	40JM Guard Bellmouth and M/side (L)	N/A	30	0.6
249356	45JM Guard Bellmouth and M/side (L)	N/A	30	0.6
249357	50JM Guard Bellmouth and M/side (L)	N/A	30	0.7
249358	56JM Guard Bellmouth and M/side (L)	N/A	50	1
249359	63JM Guard Bellmouth and M/side (L)	N/A	50	1.2
249360	71JM Guard Bellmouth and M/side (L)	N/A	50	1.4
249361	80JM Guard Bellmouth and M/side (L)	N/A	50	1.5
249362	90JM Guard Bellmouth and M/side'(L)	N/A	50	1.7
249333	100JM Guard Bellmouth and M/side (L)	N/A	50	2

Product not stocked, available in 3 working weeks.

All dimensions in mm.

Products in **bold** are available from our UK Distributors on next day delivery, if ordered by 4pm. Please call to confirm availability on 01206 222 580.

CASED AXIAL ACCESSORIES

SILENCER

PERFORMANCES

The performances are derived from tests to BS848. Measurements of fan noise are made with and without the silencer in position. The difference between recorded levels is the dynamic (with airflow) attenuation or insertion loss of the silencer. Type B silencers may be directly coupled to both inlet and outlet flanges of the fan. When type C silencers are directly coupled to the fan flanges they are most effective on the outlet. A spacer duct of 1D length between the fan inlet flange and a type C silencer is necessary to ensure maximum performance.

Note: C type silencers mounted close to a fan may effect the aerodynamic performance.

CONSTRUCTION

Casings are of rolled, pre-galvanised sheet steel with spun end rings incorporating tapped inserts for fixing. Suitable fixing screws are provided with all steel silencers.

The absorbent material is acoustic grade mineral fibre with an erosion resistant facing. It is protected and contained by a pre-galvanised perforated steel sheet formed to match the fan diameter.

Cylindrical silencers shall be suitable for air pressures up to a maximum of 1000 Pa. For duct pressures in excess of 1000 Pa please enquire.

A Melinex Lining (variant code M) can be supplied for critically clean applications such as hospitals to ensure no fibre migration. The lining may also be used in moisture or grease laden conditions, such as kitchen extract systems where the material is used to stop the ingress of grease etc. into the acoustic media.

The use of the lining also allows the silencers to be low pressure steam cleaned. Some reduction of attentuation due to the lining will be experienced.

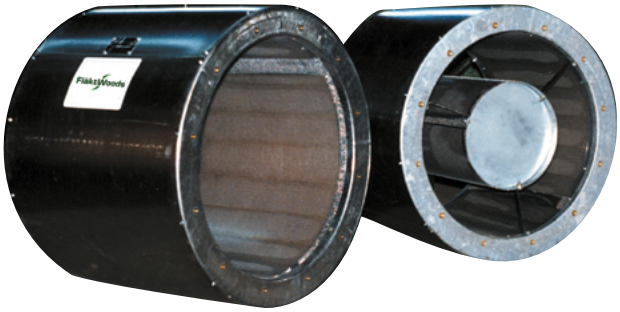

SIZE RANGE

Type B silencer bore diameters range from 280 mm to 1000 mm metric range in lengths equal to or twice the bore diameter (ID or 2D) Pressure loss for type B silencers is the same as a plain duct.

Type C silencers have a centrally mounted absorbent pod in the airway for increased attenuation. The pressure loss due to the pod is provided in Fan Selector when selecting the C type silencer as an accessory.

The diameter range is 315 mm to 1000 mm metric range.

FINISHES

Standard finish is galvanised zinc coating to BS2989 Z2. Other finishes including epoxy paint are available to special order.

TEMPERATURE RANGE

Standard silencers are suitable for temperatures from -40°C to 200°C. When moisture resistant lining is used the continuous air handling temperature is limited to 80°C. Special treatments enable silencers to operate at temperatures up to 600°C. For smoke applications, please enquire.

MOUNTING

Galvanised steel mounting feet and matching flanges corresponding to those supplied for Aerofoil fans are available.

CASED AXIAL ACCESSORIES

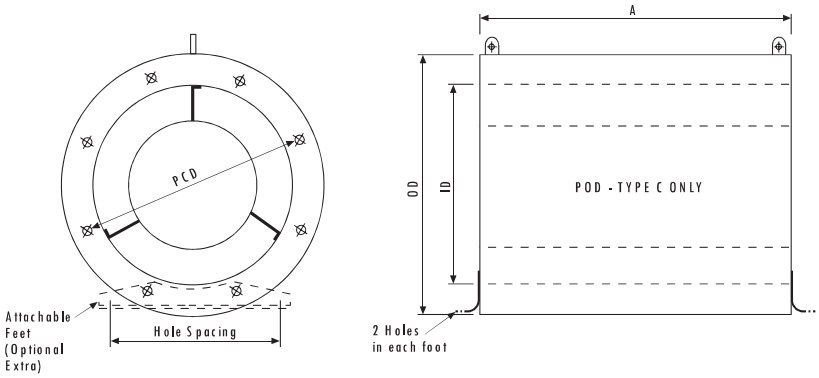

B TYPE SILENCER

Bore Dia. mm (A)	Product Number (B1D)	OD	No of holes	PCD	Thread	Mounting Foot holes		A Length		Weight (kg)	
						Dia	Spacing	1D	2D	1D	2D
315	SB211401	415	8	355	M8	10	265	315	630	10	17
355	SB221401	455	8	395	M8	10	305	355	710	12	20
400	SB241401	500	8	450	M10	10	350	400	800	15	25
450	SB251401	600	8	500	M10	10	400	450	900	20	33
500	SB271401	650	12	560	M10	10	450	500	1000	25	41
560	SB281401	710	12	620	M10	10	510	560	1120	30	50
630	SB301401	780	12	690	M10	12	580	630	1260	35	61
710	SB311401	860	16	770	M10	10	660	710	1420	44	76
800	SB331401	1000	16	860	M10	12	750	800	1600	55	96
900	SB341401	1100	16	970	M12	12	850	900	1800	70	129
1000	SB351401	1200	16	1070	M12	12	950	1000	2000	82	157

C TYPE SILENCER (PODDED)

Bore Dia. mm (A)	Product Number (C1D)	OD	No of holes	PCD	Thread	Mounting Foot holes		A Length		Weight (kg)	
						Dia	Spacing	1D	2D	1D	2D
315	SC211401	415	8	355	M8	10	265	315	630	13	19
355	SC221401	455	8	395	M8	10	305	355	710	15	24
400	SC241401	500	8	450	M10	10	350	400	800	18	30
450	SC251401	600	8	500	M10	10	400	450	900	24	39
500	SC271401	650	12	560	M10	10	450	500	1000	29	48
560	SC281401	710	12	620	M10	10	510	560	1120	35	58
630	SC301401	780	12	690	M10	12	580	630	1260	42	72
710	SC311401	860	16	770	M10	10	660	710	1420	53	90
800	SC331401	1000	16	860	M10	12	750	800	1600	66	116
900	SC341401	1100	16	970	M12	12	850	900	1800	84	150
1000	SC351401	1200	16	1070	M12	12	950	1000	2000	100	182

CASED AXIAL ACCESSORIES

SILENCER ACOUSTIC PERFORMANCE

TYPE B DYNAMIC ATTENUATION

		OCTAVE-BAND MID FREQUENCIES HZ							
BORE DIA. MM (D)	LENGTH	63	125	250	500	1K	2K	4K	8K
315	1D	1	2	4	9	11	10	9	7
	2D	1	2	5	11	16	12	11	10
355	1D	1	2	4	10	12	10	9	7
	2D	2	3	6	13	17	14	11	11
400	1D	2	3	5	10	13	11	9	8
	2D	3	4	7	14	18	15	11	12
450	1D	2	3	6	12	13	11	10	6
	2D	3	4	8	17	18	15	11	11
500	1D	2	3	6	13	14	10	10	5
	2D	3	4	8	19	18	14	11	10
550	1D	2	4	7	14	14	9	10	7
	2D	3	5	9	19	18	14	12	11
630	1D	2	5	7	15	13	8	9	8
	2D	4	6	9	19	19	14	13	12
710	1D	2	5	7	15	13	9	9	8
	2D	4	6	9	19	17	13	12	11
800	1D	2	5	8	16	12	9	9	8
	2D	4	6	10	19	15	12	11	10
900	1D	2	5	10	17	13	11	10	8
	2D	4	6	12	19	15	12	11	10
1000	1D	4	5	11	16	11	10	8	9
	2D	4	6	13	19	14	12	11	11

TYPE C DYNAMIC ATTENUATION

		OCTAVE-BAND MID FREQUENCIES HZ							
BORE DIA. MM (D)	LENGTH	63	125	250	500	1K	2K	4K	8K
315	1D	2	5	5	9	18	20	18	15
	2D	2	6	6	12	20	25	20	17
355	1D	2	5	6	9	18	22	19	16
	2D	2	6	7	13	25	27	21	17
400	1D	2	6	6	10	19	24	20	17
	2D	3	7	8	14	29	29	23	18
450	1D	2	4	7	13	20	23	22	17
	2D	2	5	9	16	29	29	21	20
500	1D	2	3	8	16	21	22	21	17
	2D	2	4	10	20	29	30	20	26
550	1D	3	5	8	16	20	18	19	15
	2D	4	5	10	20	29	28	21	23
630	1D	3	5	8	15	19	16	14	12
	2D	5	6	10	19	29	25	21	20
710	1D	3	5	8	15	19	15	14	12
	2D	5	6	10	20	26	23	18	17
800	1D	4	5	8	16	19	15	14	13
	2D	5	7	11	22	23	21	16	14
900	1D	4	5	9	17	19	15	14	13
	2D	5	7	12	24	23	21	16	15
1000	1D	5	5	11	18	19	15	14	13
	2D	5	7	13	26	24	20	16	16

All performances are derived from tests to BS848.

The above silencers give the following approximate dBA reductions: -

B Type 1 diameter length - 7 to -10 dBA

C Type 1 diameter length - 12 to -15 dBA

For full acoustic details and resistance to airflow for type C please refer to fan selector.

CASED AXIAL ACCESSORIES

RUBBER IN SHEAR ANTI-VIBRATION MOUNTS

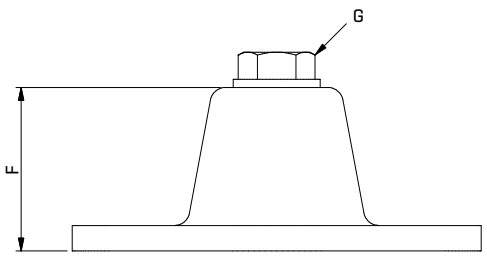

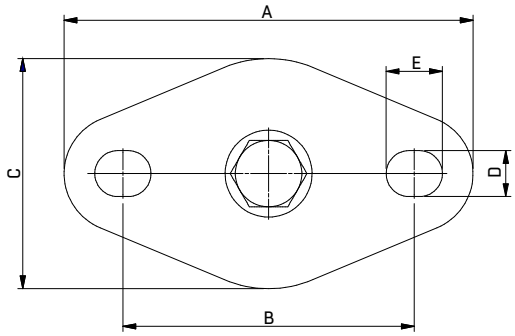

Product Code	Type	Load at 5-6mm deflection (Kg)	A	B	C	D	E	F	G
505000	**AV Rubber MP2-28 Yellow ISL**	**28**	**80**	**57**	**45**	**9**	**11**	**32**	**M8**
505001	**AV Rubber MP2-50 Blue ISL**	**50**	**80**	**57**	**45**	**9**	**11**	**32**	**M8**
505002	**AV Rubber MP2-80 Red ISL**	**80**	**80**	**57**	**45**	**9**	**11**	**32**	**M8**

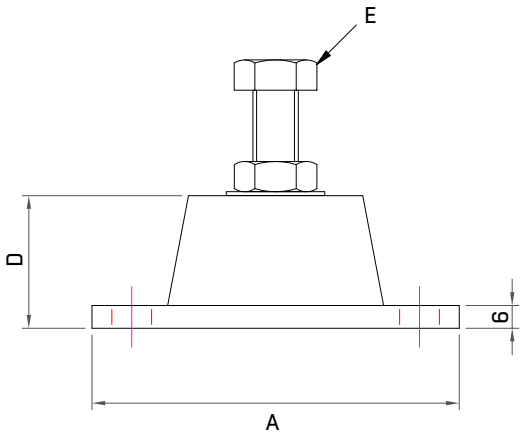

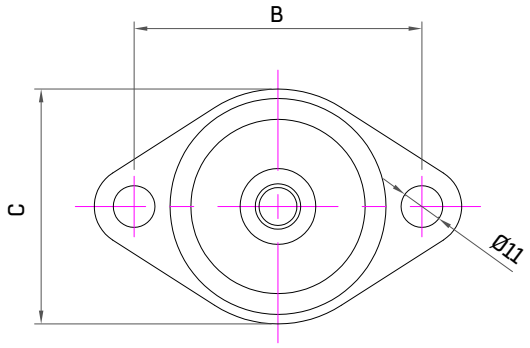

Product Code	Type	Load at 8mm deflection (Kg)	A	B	C	D	E
863893	**AV Rubber MP5-110 Yellow ISL**	**110**	**95**	**71**	**60**	**9**	**M10 x 25mm**
863894	**AV Rubber MP5-180 Blue ISL**	**180**	**95**	**71**	**60**	**9**	**M10 x 25mm**
863895	**AV Rubber MP5-280 Red ISL**	**280**	**95**	**71**	**60**	**9**	**M10 x 25mm**
863896	**AV Rubber MP6-260 Blue ISL**	**260**	**150**	**115**	**80**	**11**	**M12 x 30mm**

All dimensions in mm.

Products in **bold** are available from our UK Distributors on next day delivery, if ordered by 4pm. Please call to confirm availability on 01206 222 580.

CASED AXIAL ACCESSORIES

ENCLOSED SPRING ANTI-VIBRATION MOUNTS

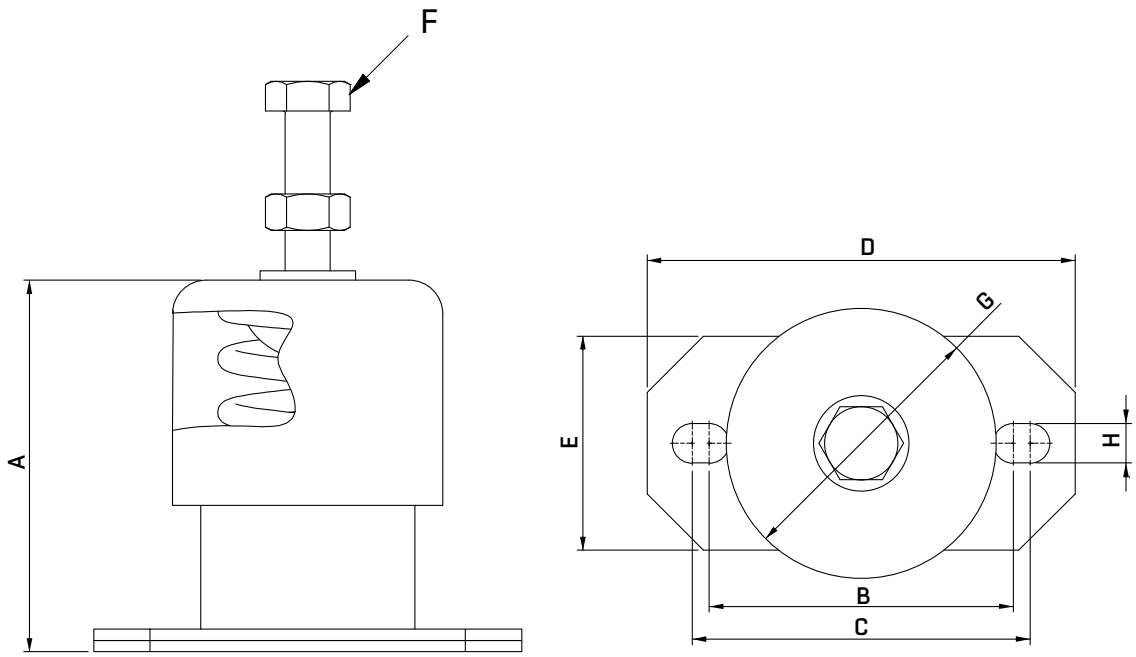

Product Code	Type	Load at 20mm deflection (Kg)	A	B	C	D	E	F	G	H
505009	MMS1-L-10 Claret ISL	10	66	54	60	76	38	M8	48	7
505010	MMS1-L-15 Yellow ISL	15	66	54	60	76	38	M8	48	7
505011	**MMS1-L-20 Grey ISL**	**20**	**66**	**54**	**60**	**76**	**38**	**M8**	**48**	**7**
505012	**MMS1-L-40 Green ISL**	**40**	**66**	**54**	**60**	**76**	**38**	**M8**	**48**	**7**
505013	MMS1-L-70 Red ISL	70	66	54	60	76	38	M8	48	7
505014	MMS1-L-100 Blue ISL	100	66	54	60	76	38	M8	48	7

Product Code	Type	Load at 25mm deflection (Kg)	A	B	C	D	E	F	G	H
505015	MMS1-30 Yellow ISL	30	96	85	90	110	70	M10	78	9
505016	**MMS1-60 Green ISL**	**60**	**96**	**85**	**90**	**110**	**70**	**M10**	**78**	**9**
505017	**MMS1-100 Blue ISL**	**100**	**96**	**85**	**90**	**110**	**70**	**M10**	**78**	**9**
505018	MMS1-160 White ISL	160	96	85	90	110	70	M10	78	9
505019	**MMS1-250 Red ISL**	**250**	**96**	**85**	**90**	**110**	**70**	**M10**	**78**	**9**

Products in **bold** are available from our UK Distributors on next day delivery, if ordered by 4pm. Please call to confirm availability on 01206 222 580.

CASED AXIAL ACCESSORIES

LOUVRE SHUTTER

Suitable for fan dia. A	Product Number	A	B	C	Weight kg
315	**403715**	**250**	**300**	**395**	**1**
355	**403716**	**300**	**350**	**445**	**1.25**
400	**403717**	**350**	**400**	**495**	**1.5**
450	**403718**	**400**	**450**	**545**	**1.75**
500	**403719**	**450**	**500**	**595**	**2**
560	**410282**	**500**	**550**	**645**	**2.2**
630	**407949**	**603**	**653**	**748**	**2.4**

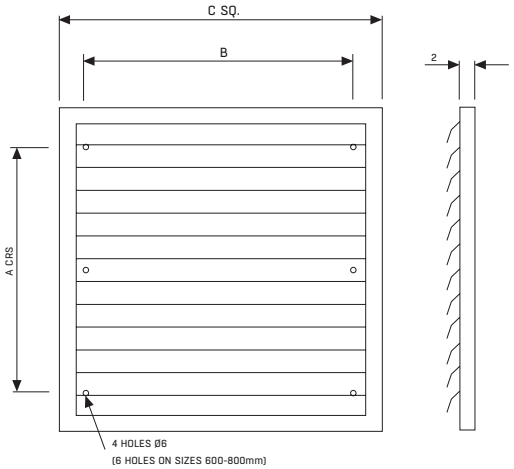

Aluminium frames, plastic shutters. Shutters must be separated from the fan mounting plane by the following minimum distances:

Up to 500 mm Ø – 150mm

560 to 630 mm Ø – 200mm

Note: that under some combinations of fan speed and wind the shutters vanes may become unstable. This is more likely to occur at reduced fan speed.

ACOUSTIC JACKETS

Diameter Size (mm)	Product Number	Type
315	860676	High Perf Acoustic Jacket 315 Dia x 375 Long (JMv)
355	**860677**	**High Perf Acoustic Jacket 355 Dia x 375 Long (JMv)**
400	860678	High Perf Acoustic Jacket 400 Dia x 375 Long (JM)
450	**860679**	**High Perf Acoustic Jacket 450 Dia x 375 Long (JM)**
450	867988	High Perf Acoustic Jacket 450 Dia x 520 Long (JM)
500	863694	High Perf Acoustic Jacket 500 Dia x 330 Long (JM)
500	867784	High Perf Acoustic Jacket 500 Dia x 375 Long (JM)
500	**858991**	**High Perf Acoustic Jacket 500 Dia x 520 Long (JM)**
500	876675	High Perf Acoustic Jacket 500 Dia x 710 Long (MaXfan²)
560	**858911**	**High Perf Acoustic Jacket 560 Dia x 520 Long (JM)**
560	876737	High Perf Acoustic Jacket 560 Dia x 654 Long (MaXfan²)
630	**858801**	**High Perf Acoustic Jacket 630 Dia x 520 Long (JM)**
630	876676	High Perf Acoustic Jacket 630 Dia x 710 Long (MaXfan²)

Our Acoustic Jackets are made to suit the metric Aerofoil Axial Flow Fan range (other fan ranges can be accommodated, for details please enquire). The effect of fitting an Acoustic Jacket to our 'L' type only is to reduce the amount of total sound breaking out from the fan casing only.

The effect of fitting an Acoustic Jacket to our 'L' type only is to reduce the amount of total sound breaking out from the fan casing only.

High performance acoustic jackets which typically achieve a 10-14dB(A) reduction in casing breakout noise.

Typical Construction suitable for indoors / outdoors.

- Grey silicone glass cloth inner and outer
- 50mm mineral wool insulation layer
- Sound barrier material
- Terminal box cut out included (if required / or if dimensions are available)
- Supplied complete with Velcro flap and straps with D rings

All dimensions in mm.

Products in **bold** are available from our UK Distributors on next day delivery, if ordered by 4pm. Please call to confirm availability on 01206 222 580.

TUBE & BOX FAN - ACCESSORIES

BDS - BACK DRAUGHT DAMPER

Automatic back draught damper with flute mechanism for installation into the tube system. Opening in air stream, closing via flute power. Casing made of galvanized sheet steel with aluminium back draught damper.

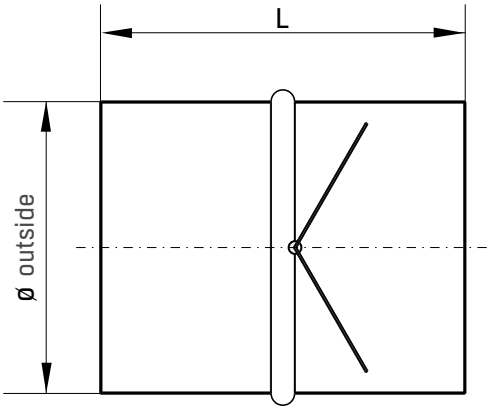

Product Size	Product Number	Ø Outside	L
100	BS100000	100	96
125	BS125000	125	96
150	BS150000	150	96
160	BS160000	160	96
200	BS200000	200	113
250	BS250000	250	113
315	BS315000	315	113
355	BS355000	355	113
400	BS400000	400	113

CFC - DUCT CLAMPS

Clamps made of galvanized sheet steel, for a low-noise connection between fan and duct. Inside lined with foam.

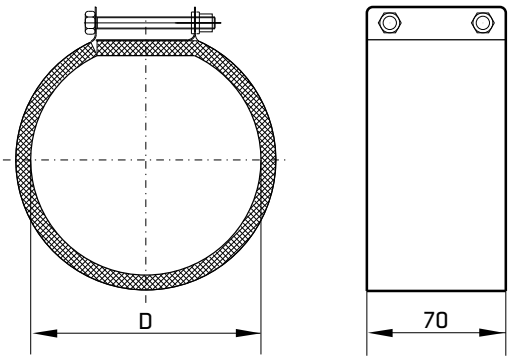

Size	Product Number	ØD
100	**CP100000**	**100**
125	**CP125000**	**125**
150	**CP150000**	**150**
160	**CP160000**	**160**
200	**CP200000**	**200**
250	**CP250000**	**250**
280	**CP280000**	**280**
315	**CP315000**	**315**
355	**CP355000**	**355**
400	**CP400000**	**400**

All dimensions shown in mm

Products in **bold** are available from our UK Distributors on next day delivery, if ordered by 4pm. Please call to confirm availability on 01206 222 580.

TUBE & BOX FAN - ACCESSORIES

SFC - FLEXIBLE CONNECTION

Estoc and Estoc EC SFC flexible connector flanges are made of galvanized sheet steel, while the flexible middle section is manufactured from PVC woven cloth which has a maximum temperature rating of up to +70°C.

Estoc Targe flexible connector flanges are made of galvanized sheet steel, while the flexible middle section is manufactured from PU coated fibre glass cloth which has a maximum temperature rating up to +180°C.

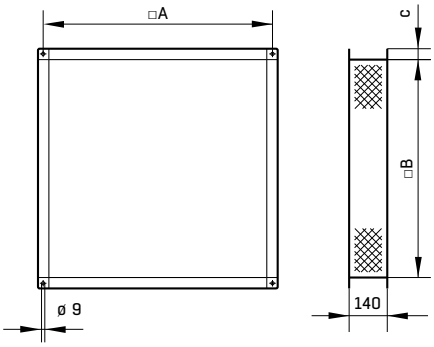

ePowerBox & Estoc EC Flexible Connectors

Size	Product Number	a	b	c
ePowerBox/ESTOC EC 50-355	**BI101030**	**433**	**409**	**20**
ePowerBox/ESTOC EC 67-400	**BI101031**	**603**	**579**	**20**
ePowerBox/ESTOC EC 67-500	**BI101031**	**603**	**579**	**20**
ePowerBox/ESTOC EC 80-560	**BI101033**	**697**	**659**	**30**
ePowerBox/ESTOC EC 80-630	**BI101033**	**697**	**659**	**30**
ePowerBox/ESTOC EC 102-710	**BI101035**	**917**	**879**	**30**

Estoc Targe Flexible Connectors

Size	Product Number	a	b	c
ESTOC TARGE 50-355 - Outlet	BI101073	398	218	30
ESTOC TARGE 50-355 - Inlet	BI101074	388	388	30
ESTOC TARGE 67-400+450 - Outlet	**BI101075**	**568**	**258**	**30**
ESTOC TARGE 67-400+450 - Inlet	**BI101076**	**488**	**488**	**30**
ESTOC TARGE 80-500+630 - Outlet	**BI101077**	**698**	**338**	**30**
ESTOC TARGE 80-500+630 - Inlet	**BI101078**	**618**	**618**	**30**

SOC - OUTLET COVER

Weather protection outlet cover is manufactured from galvanized sheet steel and is designed for products that discharge air directly to atmosphere.

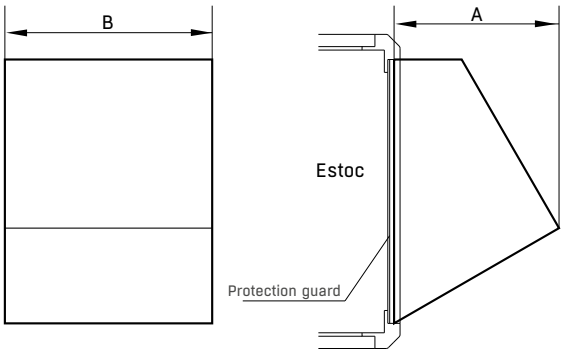

Size	Product Number	a	b	c
ePowerBox/TARGE/ ESTOC EC 50-355	BI101054	300	450	20
ePowerBox/TARGE/ ESTOC EC 67-400	BI101055	380	620	20
ePowerBox/TARGE/ ESTOC EC 67-450	BI101055	380	620	20
ePowerBox/TARGE/ ESTOC EC 67-500	BI101055	380	620	20
ePowerBox/TARGE/ ESTOC EC 80-560	BI101057	430	720	30
ePowerBox/TARGE/ ESTOC EC 80-630	BI101057	430	720	30
ePowerBox/TARGE/ ESTOC EC 102-710	BI101059	520	940	30

All dimensions shown in mm

TUBE & BOX FAN - ACCESSORIES

MF - MOUNTING FOOT (ROPERA)

The MF mounting foot is manufactured from galvanized steel and is designed for use with our Ropera tube fan. Fixing holes in the mounting foot tabs can be aligned to those of the fan.

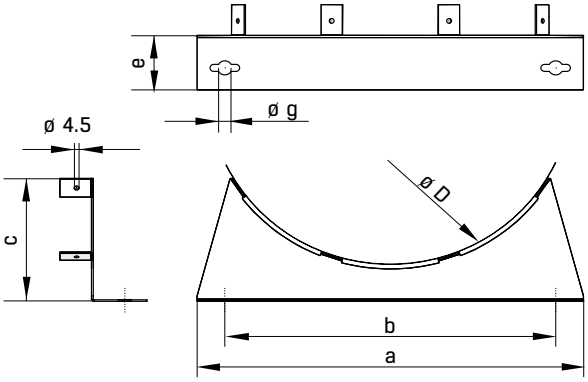

Size	Product Number	a	b	c	ØD	e	f	Øg
100-125L	**MF100125**	**260**	**230**	**72.5**	**234**	**30**	**53.5**	**9**
150-250L	**MF150250**	**348**	**298**	**114**	**330**	**50**	**78.5**	**9**
315/315L	**MF315000**	**398**	**348**	**123**	**394**	**70**	**98.5**	**13**
355/355L	**MF355000**	**480**	**430**	**145**	**486**	**100**	**148.5**	**13**

MB - MOUNTING FOOT (ESPADA)

The MB mounting bracket is manufactured from galvanized steel and is designed for use with our Espada tube fan. Fixing holes in the mounting foot are designed to allow easy fixing of the bracket to the fan body.

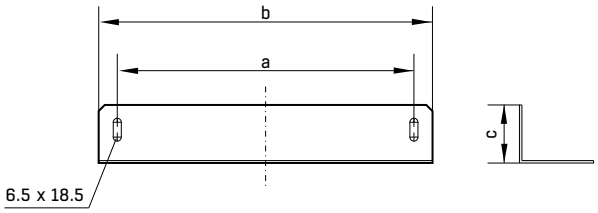

Product Code	Product Number	a	b	c
100L-125L	**MB100125**	**240**	**270**	**47**
150-250L	**MB150250**	**240**	**270**	**47**
315/315L	**MB315000**	**375**	**405**	**47**

All dimensions shown in mm

Products in **bold** are available from our UK Distributors on next day delivery, if ordered by 4pm. Please call to confirm availability on 01206 222 580.

TUBE & BOX FAN - ACCESSORIES

CIG - PROTECTION GUARD

Our inlet protection guard is manufactured from spiral wound steel rod and is designed to be mounted on the suction side of the fan.

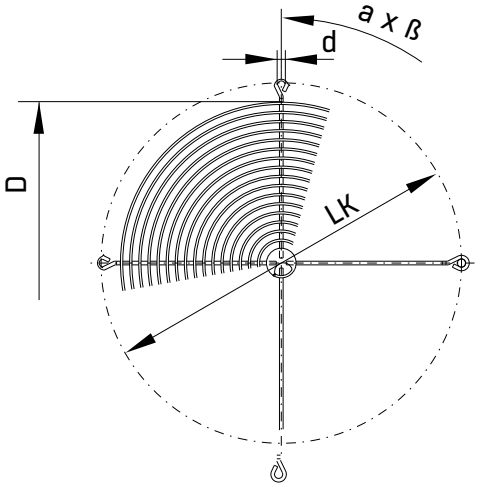

Size	Product Number	ØD
100	IG100000	100
125	IG125000	125
150	IG150000	150
160	IG160000	160
200	IG200000	200
250	IG250000	250
315	IG315000	315
355	IG355000	355
400	IG400000	400

FLS - SQUARE PLASTIC BACK DRAUGHT SHUTTER

Automatic, square plastic shutter made of plastic for high-pressure wall installation. Ex version made of conductive plastic. (Ropera and Espada only).

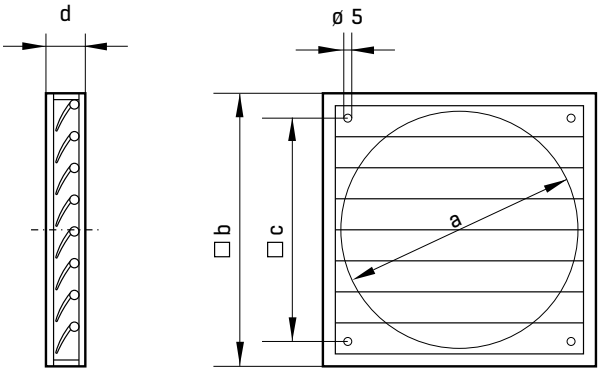

Size	Product Number	Ø Outside	L
100	BI100411	100	96
125	BI100347	125	96
150	BI100348	150	96
160	BI100349	160	96
200	BI100350	200	113
250	BI100351	250	113
315	BI100352	315	113
355	BI100353	355	113

All dimensions shown in mm

Products in **bold** are available from our UK Distributors on next day delivery, if ordered by 4pm. Please call to confirm availability on 01206 222 580.

TUBE & BOX FAN - ACCESSORIES

CFB - FILTER BOX INCL. FILTER

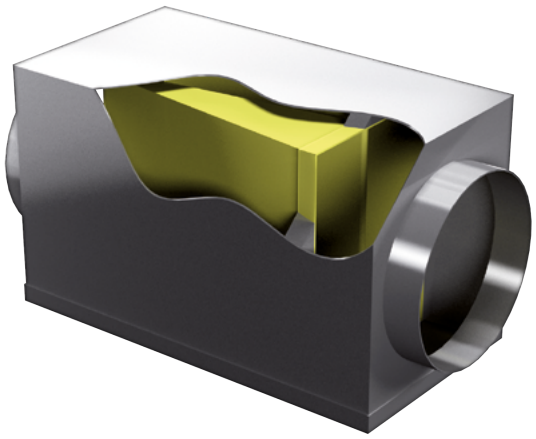

Casing made of galvanized sheet steel with folding cover for easy filter change. Filter of filter class F5 are inclusive. Connections suitable to standard tube diameters.

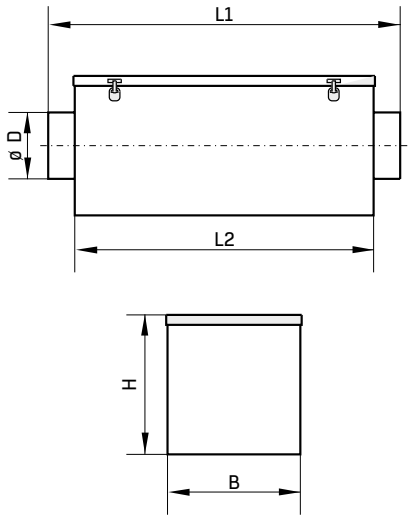

Size	Product Number	ØD	B	H	L1	L2
100	BI100354	100	200	210	530	450
125	BI100355	125	200	210	530	450
150	BI100356	150	245	275	530	450
160	BI100357	160	245	275	530	450
200	BI100358	200	245	275	530	450
250	BI100359	250	350	355	630	550
315	BI100360	315	350	355	630	550
355	BI100361	355	450	455	770	650
400	BI100362	400	450	455	770	650

SMT - MOUNTING TRACK

For quick and easy assembly. One delivery set contains two pieces.

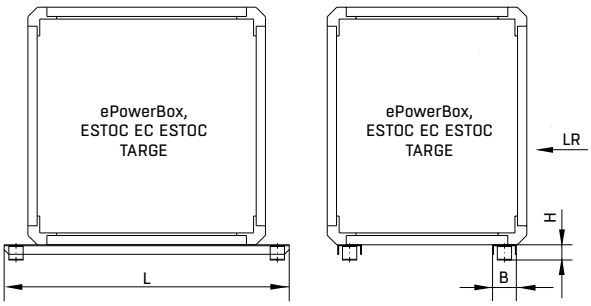

	Product Number	Part Number	L	B	H
ESTOC TARGE 50-355	ePowerBox/ESTOC EC 50-355	BI101135	600	50	32
ESTOC TARGE 67-400	ePowerBox/ESTOC EC 67-400	BI101136	770	50	32
ESTOC TARGE 67-450	ePowerBox/ESTOC EC 67-450	BI101136	770	50	32
ESTOC TARGE 80-500	ePowerBox/ESTOC EC 80-500	BI101136	900	60	52.5
ESTOC TARGE 80-560	ePowerBox/ESTOC EC 80-560	BI101138	900	60	52.5
ESTOC TARGE 80-630	ePowerBox/ESTOC EC 80-630	BI101138	900	60	52.5
ESTOC TARGE 102-630	ePowerBox/ESTOC EC 102-630	BI101141	1120	60	52.5

All dimensions shown in mm

Products in **bold** are available from our UK Distributors on next day delivery, if ordered by 4pm. Please call to confirm availability on 01206 222 580.

TUBE & BOX FAN - ACCESSORIES

STP - Transformation Piece (Estoc Targe Only)

Allows seamless intersection on outlet side on a standard diameter, made of galvanized sheet steel.

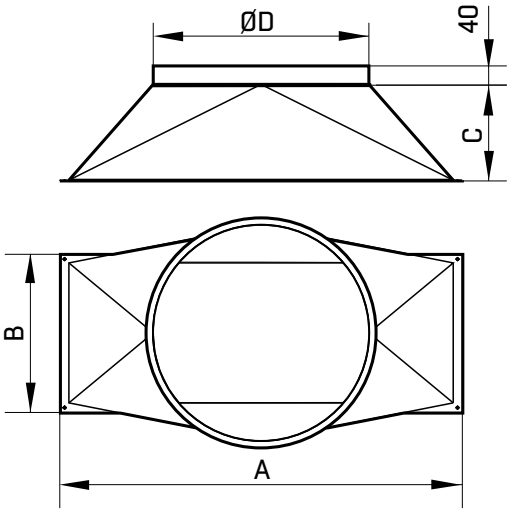

Size	Product Number	A	B	C	ØD	Hole
ESTOC TARGE 50-355	BI101114	418	238	250	355	4
ESTOC TARGE 67-400	BI101115	588	278	280	450	6
ESTOC TARGE 67-450	BI101115	588	278	280	450	6
ESTOC TARGE 80-500	BI101117	718	358	320	560	6
ESTOC TARGE 80-560	BI101117	718	358	320	560	6
ESTOC TARGE 80-630	BI101117	718	358	320	560	6
ESTOC TARGE 102-630	BI101120	938	418	400	630	8

All dimensions shown in mm

SWR - Weather Protection Roof/Cowl

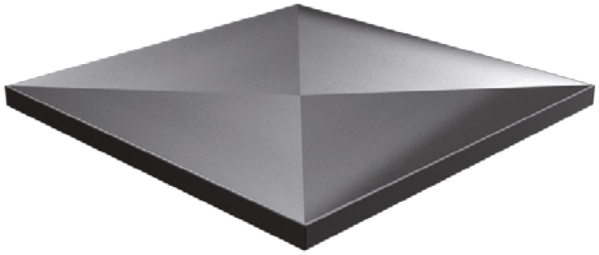

Additional protection when mounted outside made of corrosion-resistant aluminium.

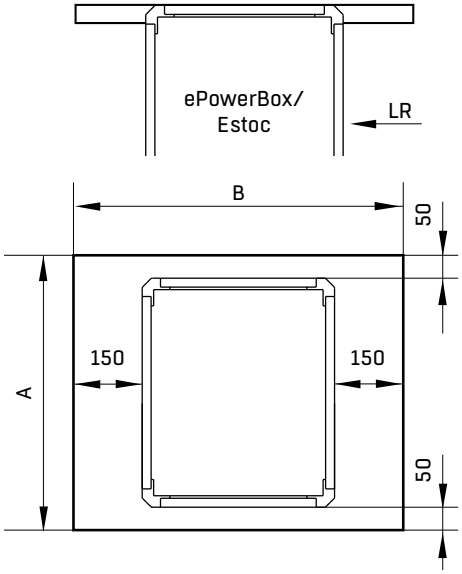

Product Code	Product Number	A	B
ePowerBox/ESTOC EC 50-355	BI101060	600	800
ePowerBox/ESTOC EC 67-400	BI101061	770	970
ePowerBox/ESTOC EC 67-450	BI101061	770	970
ePowerBox/ESTOC EC 67-500	BI101061	770	970
ePowerBox/ESTOC EC 80-560	BI101063	900	1100
ePowerBox/ESTOC EC 80-630	BI101063	900	1100
ePowerBox/ESTOC EC 102-710	BI101065	1120	1320
ESTOC Targe 50-355	BI101121	600	720
ESTOC Targe 67-400	BI101122	770	800
ESTOC Targe 67-450	BI101122	770	800
ESTOC Targe 67-500	BI101124	900	890
ESTOC Targe 80-560	BI101125	900	1040
ESTOC Targe 80-630	BI101126	900	1100
ESTOC Targe 102-710	BI101127	1120	1180

Products in **bold** are available from our UK Distributors on next day delivery, if ordered by 4pm. Please call to confirm availability on 01206 222 580.

TUBE & BOX FAN - ACCESSORIES

RSA - DUCT SOUND ATTENUATOR

Duct sound attenuator with frame made of galvanized sheet steel. Sound trap with incombustible mineral wool according to DIN 4102 class A, Ex version with perforated steel. This guarantees a high sound insulation and due to aerodynamic optimized guide plates lower pressure losses. Max. air speed 20 m/s, max. temperature 100°C, max. pressure from -800 to 1000 Pa.

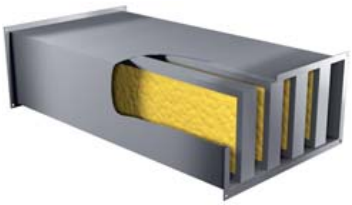

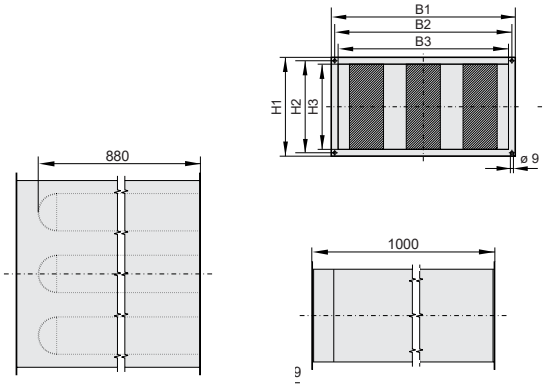

Duct size in cm	Product Number	B1	B2	B3	H1	H2	H3	Number of sound traps
Katana 315, 355, 400	BI101204	640	620	600	390	370	350	3
Katana 450	BI101205	740	720	700	440	420	400	3
Katana 500	BI101206	840	820	800	540	520	500	3
Katana 560	BI101207	1040	1020	1000	540	520	500	4

Duct size in cm	Attenuation values in dB						
	125 Hz	250 Hz	500 Hz	1 kHz	2 kHz	4 kHz	8 kHz
Katana 315, 355, 400	8	10	24	32	33	18	18
Katana 450	5	8	17	23	26	17	17
Katana 500	5	8	19	27	27	15	15
Katana 560	4	10	12	18	19	12	12

RFC - FLEXIBLE DUCT CONNECTION

Flexible duct connection with flange frame made of galvanized sheet steel. Flexible middle section made from PVC woven cloth with a temperature range of up to +70°C. Electroconductive and therefore also suitable for explosion proof fans.

RCF - FLANGE

Harmonized flange made of galvanized sheet steel for temperatures of up to +120°C, suited for Ex-applications.

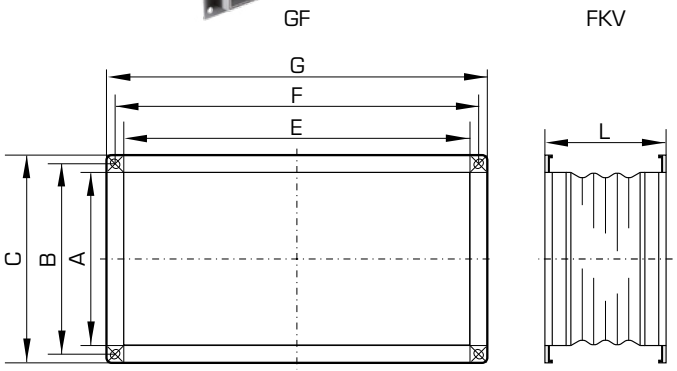

Product Size	Product Number RCF	Product Number RFC	A	B	C	E	F	G	L min
Katana 315, 355, 400	BI100367	BI100377	350	370	390	600	620	640	140
Katana 450	BI100368	BI100378	400	420	440	700	720	740	140
Katana 500	BI100369	BI100379	500	520	540	800	820	840	140
Katana 560	BI100372	BI100382	500	520	540	1000	1020	1040	140

All dimensions shown in mm

TUBE & BOX FAN - ACCESSORIES

RLS - PLASTIC SHUTTER

Automatic, rectangular plastic shutter made of plastic for high-pressure wall installation.

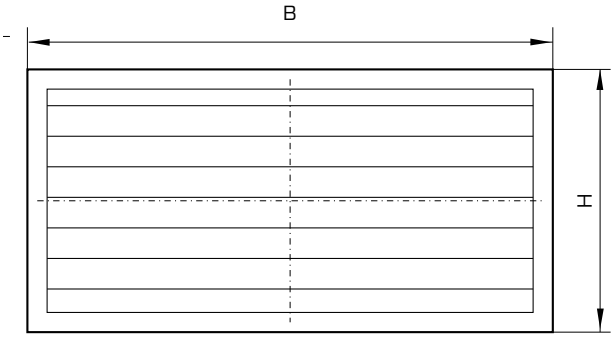

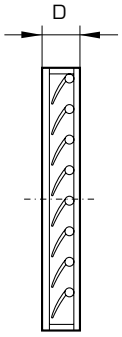

Product Size	Product Number	B	H	D
Katana 315, 355, 400	BI100383	598	348	40
Katana 450	BI100383	698	398	40
Katana 500	BI100383	798	498	40
Katana 560	BI100383	998	498	40

RAD - AIR DAMPER

For mounting into duct systems. Casing made of galvanized sheet steel, lamellas made of aluminium. Exterior adjusting lever for regulating mechanism of lamellas.

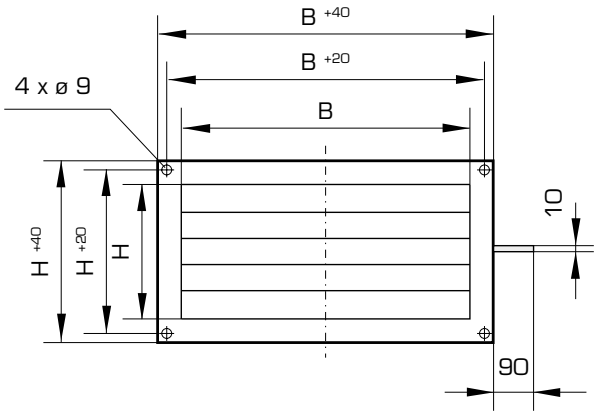

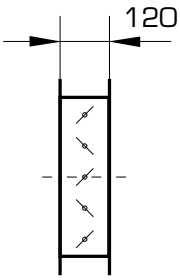

Duct size in cm	Product Number	B	H
Katana 315, 355, 400	BI100398	600	350
Katana 450	BI100399	700	400
Katana 500	BI100400	800	500
Katana 560	BI100401	1000	500

All dimensions shown in mm

TUBE & CIRCULAR BOX FAN - ACCESSORIES

RFB - FILTER BOX INCL. FILTER

Casing made of galvanized sheet steel with folding cover for an easier filter change. Pocket filter of filter class G4, F5 and F7 available. Connections on rectangular duct system.

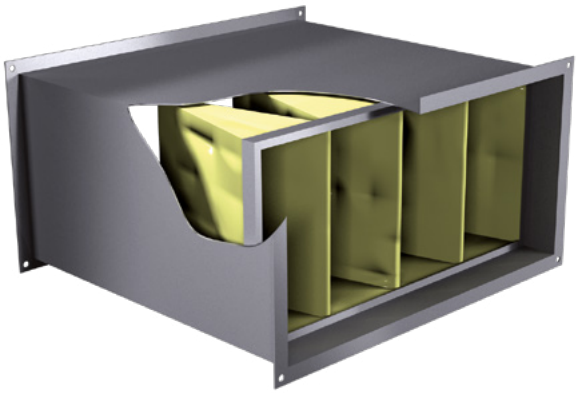

Product Size	Product Number	B	H
Katana 315, 355, 400	BI100406	600	350
Katana 450	BI100407	700	400
Katana 500	BI100408	800	500
Katana 560	BI100410	1000	500

All dimensions shown in mm

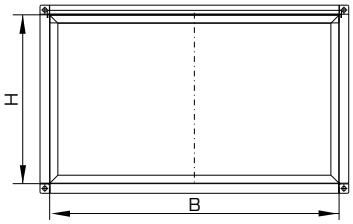

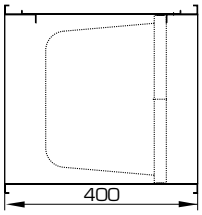

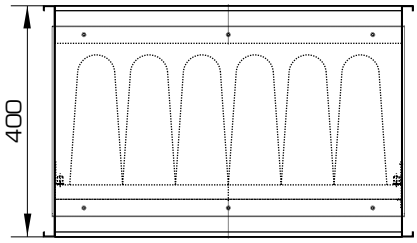

Products in **bold** are available from our UK Distributors on next day delivery, if ordered by 4pm. Please call to confirm availability on 01206 222 580.

SOUND ATTENUATOR - BDER

FEATURES

- Acoustic performance in accordance with ISO 7235
- Type approval for strength and leakage - Sitac / Svenskt Bygggodkännande AB, No. 1718/88, tightness class D (EN12237)
- Polyester absorbers certified for cleanliness class M1
- Made of hot-dip galvanised sheet metal with a Z275 coating, corrosion category C2 (EN-ISO 12944-2)
- Absorbing materials: mineral wool

DESCRIPTION

The sound absorber BDER is used in round general ventilation ducts. The maximum air velocity through absorbers BDER-30, 10 m/s, the recommended velocity rate being less than 5 m/s.

BDER-30 straight sound absorber with 50 mm mineral wool filling, fire resistance class EI 30 *) (SITAC 2525/80)

NOTE: *) provided that the safety distance to an escape route and combustible material is at least that specified in the tables below (Swedish Fire Regulation BBR 5:6213)

The pressure drop across other sound absorbers is the same as that of an equivalent length of ducting.

INSTALLATION, HANDLING AND STORAGE

BDER is a Veloduct component. Please see the installation, handling and storage instructions for the Veloduct / Ekoduct ducting system.

OPERATION AND MAINTENANCE

The product can be used without any maintenance other than cleaning, which should be done with a nylon brush as part of normal duct cleaning. The frequency of cleaning should be the same as that specified for the entire ventilation system.

PACKAGING

Normally packed in cardboard, with the ends covered in plastic. The packaging may vary depending on the number and size of the products ordered.

DISPOSAL

The metal casings can be recycled as metal, the fillings are landfill waste.

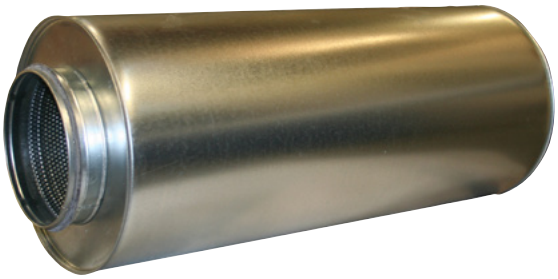

PRODUCT CODE

BDER-aa-bbb-ccc
Model (aa)
30,
Size, cm (bbb)
Length, cm (ccc)

For information on the full range of BDER silencers including podded and rectangular versions, please contact us on 01206 222580 or email woodsuk@flaktgroup.com

Products in **bold** are available from our UK Distributors on next day delivery, if ordered by 4pm. Please call to confirm availability on 01206 222 580.

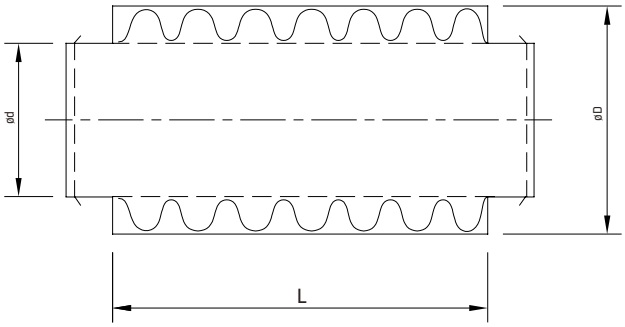

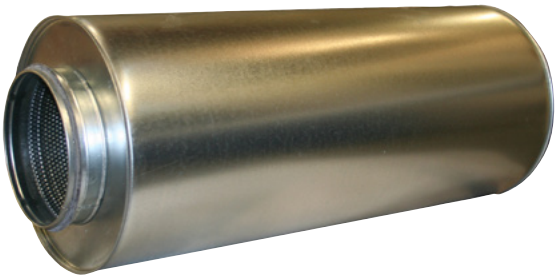

Part Code	Part Number	BDER-30		Dimensions (mm)			Weight (Kg)	EI30 2,5 kW safety distance	Attenuation (dB) Mid frequency (Hz							
		Size - length		Ød	L	ØD			63	125	250	500	1000	2000	4000	8000
BDER-30-010-030	**SL000345**	10	**-30**	**100**	**300**	**200**	**1.8**	**60**	**4**	**5**	**8**	**17**	**20**	**26**	**30**	**16**
BDER-30-010-060	**SL000344**		**-60**	**100**	**600**	**200**	**3**	**60**	**11**	**7**	**12**	**29**	**37**	**45**	**42**	**23**
BDER-30-010-090	**SL000343**		**-90**	**100**	**900**	**200**	**4.7**	**60**	**11**	**9**	**17**	**39**	**44**	**47**	**45**	**29**
BDER-30-010-120	SL000342		-120	100	1200	200	5.9	80	11	11	21	40	49	48	46	31
BDER-30-012-030	**SL000341**	12	**-30**	**125**	**300**	**225**	**2.2**	**80**	**3**	**5**	**6**	**14**	**16**	**21**	**21**	**14**
BDER-30-012-060	**SL000340**		**-60**	**125**	**600**	**225**	**3.9**	**80**	**4**	**7**	**10**	**25**	**30**	**39**	**36**	**19**
BDER-30-012-090	**SL000339**		**-90**	**125**	**900**	**225**	**5.5**	**80**	**6**	**8**	**13**	**35**	**44**	**47**	**45**	**24**
BDER-30-012-120	SL000338		-120	125	1200	225	7	80	5	9	17	40	47	48	47	31
BDER-30-015-060	**SL000336**	15	**-60**	**160**	**600**	**255**	**4.6**	**80**	**3**	**5**	**7**	**21**	**24**	**35**	**27**	**17**
BDER-30-015-090	**SL000335**		**-90**	**160**	**900**	**255**	**6.2**	**80**	**6**	**6**	**9**	**30**	**36**	**46**	**33**	**21**
BDER-30-015-120	SL000334		-120	160	1200	255	8.2	100	6	6	12	33	42	45	40	25
BDER-30-016-030	SL000333	16	-30	160	300	260	2.5	80	1	2	4	11	13	20	16	12
BDER-30-016-060	**SL000332**		**-60**	**160**	**600**	**260**	**4.6**	**80**	**3**	**5**	**7**	**21**	**24**	**35**	**27**	**17**
BDER-30-016-090	SL000331		-90	160	900	260	6.2	80	6	6	9	30	36	46	33	21
BDER-30-016-120	SL000330		-120	160	1200	260	8.2	100	6	6	12	33	42	45	40	25
BDER-30-020-060	**SL000328**	20	**-60**	**200**	**600**	**300**	**5.2**	**100**	**3**	**3**	**6**	**19**	**22**	**30**	**20**	**16**
BDER-30-020-090	**SL000327**		**-90**	**200**	**900**	**300**	**7.7**	**100**	**7**	**5**	**9**	**26**	**29**	**42**	**27**	**20**
BDER-30-020-120	SL000326		-120	200	1200	300	10	100	7	6	11	34	37	50	33	23
BDER-30-025-060	**SL000324**	25	**-60**	**250**	**600**	**355**	**6.5**	**100**	**7**	**2**	**4**	**15**	**18**	**25**	**17**	**16**
BDER-30-025-090	**SL000323**		**-90**	**250**	**900**	**355**	**9.1**	**100**	**6**	**3**	**6**	**21**	**26**	**34**	**21**	**19**
BDER-30-025-120	SL000322		-120	250	1200	355	12	200	6	4	8	28	34	41	25	22
BDER-30-031-060	**SL000507**	31	**-60**	**315**	**600**	**415**	**7.9**	**200**	**1**	**2**	**4**	**12**	**16**	**19**	**15**	**14**
BDER-30-031-090	**SL000508**		**-90**	**315**	**900**	**415**	**11**	**200**	**3**	**3**	**5**	**18**	**24**	**25**	**17**	**16**
BDER-30-031-120	SL000509		-120	315	1200	415	17.3	220	3	3	7	20	26	30	20	17
BDER-30-040-090	**SL000510**	40	**-90**	**400**	**900**	**500**	**18**	**220**	**2**	**2**	**6**	**20**	**22**	**21**	**18**	**15**
BDER-30-040-120	SL000511		-120	400	1200	500	22.8	220	3	2	7	25	29	25	21	17
						Tolerance		Δ	6	3	2	2	2	2	2	3

All dimensions shown in mm

Products in **bold** are available from our UK Distributors on next day delivery, if ordered by 4pm. Please call to confirm availability on 01206 222 580.

ENVIRONMENT
ECONOMICAL
EXPERTISE

CONTROLLERS - SPEED CONTROLLER & INVERTER DRIVES (QUICK SELECTION)

Method	Electronic					Transformer											Inverter	
Phase	1					1					3						3-3	3-3
Voltage	230V 50Hz					230V 50/60Hz					400V 50/60Hz						400V 50/60Hz	
IP	54					54					54						54	66
Control Method	Amps (FLC Continuous)	Independent	Independent	Switched	Proportional	Amps (FLC Continuous)	Independent	Switched	Switched Dual Speed	Proportional	Amps (FLC Continuous)	Independent	Switched	Switched Dual Speed	Proportional	Amps (FLC Continuous)	Switched and Proportional	Switched and Proportional
Model		ME	EEID	EEDS	EEDP		TEID	TEDS	TEDSD	TEDP		TDID	TDDS	TDDSD	TDDP		IDDXF54	IDDXF66
Image																		
OHP			w/out	Thermostat	Thermostat			Thermostat	Thermostat	Thermostat		Thermostat	Thermostat	Thermostat	Thermostat		Thermistor	Thermistor
	0.5	**-**	**EA900109**	-	-													
Select Part Number	1			-	-	1.0	**EA900000**	**-**	-	-	2.5	**EA900025**	EA900029	EA900033	EA900037	1.2	-	-
	1.5	**-**	**EA900110**	-	-													
	2			-	-	1.5	**EA900001**	**EA900007**	EA900013	EA900019	4.0	**EA900026**	EA900030	EA900034	EA900038	2.2	**EA901016**	EA901072
	2.5	**-**	**EA900111**	-	-													
	3	**410290**		**EA900103**	EA900106	2.2	**EA900002**	**EA900008**	EA900014	EA900020	8.0	**EA900027**	EA900031	EA900035	EA900039	3.7	**EA901017**	EA901073
	4		**EA900102**	-	-	3.5	**EA900003**	**EA900009**	EA900015	EA900021	11.0	**EA900028**	EA900032	EA900036	EA900040	5.3	**EA901018**	EA901074
	6	**410291**		EA900104	EA900107	5.0	**EA900004**	**EA900010**	EA900016	EA900022						7.2	**EA901019**	EA901075
	10	**410323**		EA900105	EA900108	7.5	**EA900005**	**EA900011**	EA900017	EA900023						9.0	**EA901020**	EA901076
	12	**414855**				13.0	**EA900006**	**EA900012**	EA900018	EA900024						12.0	**EA901021**	EA901077
	16	**SL400073**														15.5	**EA901022**	EA901078
																23.0	**EA901023**	EA901079
																31.0	**EA901024**	EA901080
																37.0	**EA901025**	EA901081
																42.5	**EA901026**	EA901082
																61	**EA901027**	EA901083
																73	**EA901028**	EA901084
																90	**EA901029**	EA901085
																106	EA901069	EA901086
																147	EA901070	
																177	EA901071	

Inverter potentiometer is supplied loose, wiring to be supplied on site by others.
ME1.16 controller must be used in a 3 wire installations to valiadate warranty.
When an electronic controller is incorporated, a magnetic note (enhanced motor noise) can occur - particularly if the fan is operating at speeds well below maximum. Fläkt Woods recommend using a transformer speed controller for noise sensitive applications.
🌡 The control is fitted with contacts for motor thermostat (Tk) overheat protection. As a safety feature the fan will not restart before power to the control is cycled off/on. If your application requires auto-restart please enquire.
The control is fitted with contacts for motor thermostat (Tk) overheat protection. All switched, dual speed and proportional controllers are complete with BMS enable/disable and Fault via Tk.

CONTROL OPTIONS (QUICK SELECTION TABLE)

	Safety Isolators	Room Temperature Sensor/Switch	Room CO_2 Sensor/Switch	Room PIR Switch		Pressure Switch	Pressure Sensor Controller	Room Potentiometer	Room Potentiometer inc. 230V supply	Intelligent Controller
Model	SISO	SDXT	SDXC	SDSI		SDSP54	SDXP54	SDPV10	SDPV230	iFan
Rate	IP66	IP30	IP30	IP30		IP54	IP54	IP44/54 IP44/54		IP54
Image										
Part Numbers	EA002000 3P 25A+2EB EA002001 3P 40A+2EB EA002002 3P 63A+2EB EA002003 6P 25A+2EB EA002004 6P 40A+2EB	**EA002100**	**EA002101**	**430817 24v**	**441372 230v**	**EA002103 50-500Pa** EA002104 200-1000Pa	**EA002105**	**EA002107**	**EA002108**	**430743**
Compatible With	EEID	✓	✓	✓	✓	✓	✓		✓	
	EEDS	✓	✓	✓	✓	✓	✓			
	EEDP	✓	✓	✓	✓	✓	✓			
	TEID	✓	✓	✓	✓	✓	✓		✓	
	TEDS	✓	✓	✓	✓	✓	✓			
	TEDSD	✓	✓	✓	✓	✓	✓			
	TEDP	✓	✓	✓	✓	✓	✓			
	TDID	✓	✓	✓	✓	✓	✓		✓	
	TDDS	✓	✓	✓	✓	✓	✓			
	TDDSD	✓	✓	✓	✓	✓	✓			
	TDDP	✓	✓	✓	✓	✓	✓			
	IDDXB20	✓	✓	✓	✓	✓	✓	✓	✓	
	IDDXF20	✓	✓	✓	✓	✓	✓	✓	✓	
	IDDXF66	✓	✓	✓	✓	✓	✓	✓	✓	
	IEDXB20	✓	✓	✓	✓	✓	✓	✓	✓	

Products in **bold** are available from our UK Distributors on next day delivery, if ordered by 4pm. Please call to confirm availability on 01206 222 580.

ENVIRONMENT
ECONOMICAL
EXPERTISE

ME – ELECTRONIC SINGLE PHASE

CLASSIC DRIVE

FEATURES

- Infinitely variable fan speed control offers flexibility
- Illuminated on/off switch gives visual status
- Supply: 230 VAC, 50/60 Hz, 1 Phase
- IP44 ingress protection
- Two and Three wire control
- Max ambient temperature: +50°C

DESCRIPTION

Our Classic ME series drive provide speed control for single phase, 230 VAC, 50/60 Hz voltage controllable electric motors.

Available in 1, 3, 6, 10, 12 and 16 Amp units they have an illuminated on/off switch and infinitely variable control between minimum and maximum speeds.

RANGE

To ensure correct drive selection, please choose a drive that has an amp rating that is equal to or above the fan motor full load current (FLC).

Model	ME1.1	ME1.3	ME1.6	ME1.10	ME1.12	ME1.16
Part	**410289**	**410290**	**410291**	**410323**	**414855**	**SL400073**
Current rating (A)	1	3	6	10	12	16
Ingress Protection	IP44	IP44	IP44	IP44	IP44	IP44

WIRING DIAGRAMS

315-500 JM 1 PHASE (WITH ME SPEED CONTROLLER)

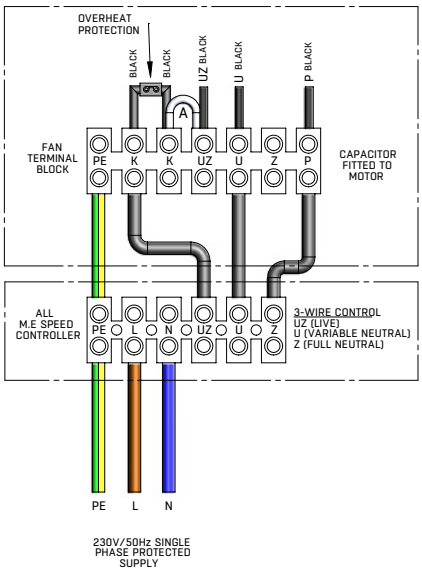

FAN CONNECTED TO SPEED CONTROLLER (VARIABLE SPEED)

560-630 JM 1 PHASE (WITH ME SPEED CONTROLLER)

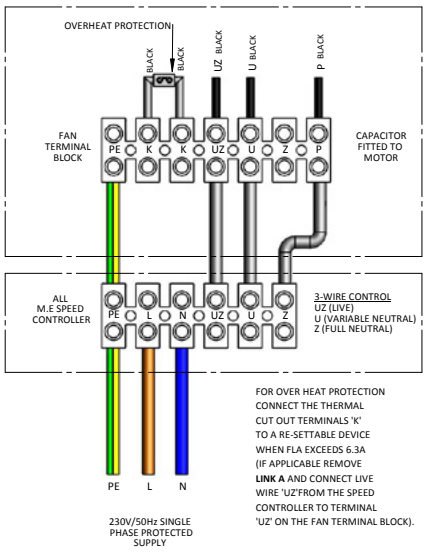

FAN CONNECTED TO SPEED CONTROLLER (VARIABLE SPEED)

Products in **bold** are available from our UK Distributors on next day delivery, if ordered by 4pm. Please call to confirm availability on 01206 222 555.

DIMENSIONS AND WEIGHTS

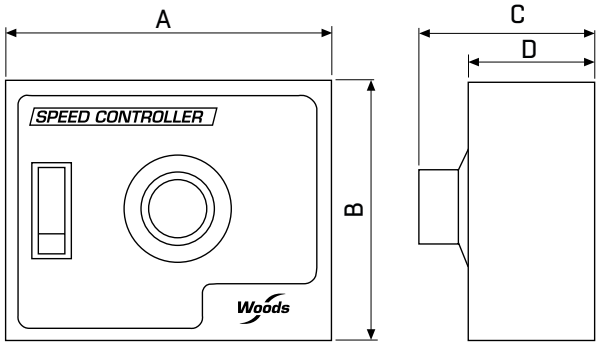

Model	Product Number	A	B	C	D
ME1.1	410289	104	83	55	40
ME1.3	410290	148	87	62	47
ME1.6	410291	148	87	62	47
ME1.10	410323	170	150	70	55
ME1.12	414855	210	180	81	65
ME1.16	SL400073	210	180	81	65

All dimensions shown in mm

COMPATIBILITY

Our ME Speed controller is suitable for use with single phase voltage controllable motors.

MOUNTING AND CONNECTION

Our controllers are suitable for mounting onto a smooth surface (wall). Connect voltage supply, motor(s) and earth as shown within the wiring diagram, using cables of the proper diameter.

ISOLATION AND ISOLATION AND WIRING (SEE DIAGRAM ON PREVIOUS PAGE)

A safety isolator/disconnect switch should be installed on the mains electricity side of all motor drives; please refer to SISO product.

We recommend three wire control for increased speed stability and low speed starting.

MOTOR PROTECTION

If motors are fitted with thermostat (Tk) overheat protection, we recommend the use of our EEDS controller type instead of our ME product.

TRANSPORT AND STOCK KEEPING

Avoid shocks. Stock in original packing. Avoid extreme conditions.

WARRANTY

Any modifications or alterations to the product relieve the manufacturer of all responsibility. The manufacturer bears no responsibility for any misprints or mistakes in this data, and modifications or improvements to the product can be made at any time after date of publication.

MAINTENANCE

In normal conditions our controllers are maintenance-free. If external surfaces requires light cleaning, please use a dry or slightly damp cloth. If heavy cleaning is needed, then we recommend the use of a non-aggressive cleaning product. Particular attention should be paid to ensure that no fluids enter the controller. Only reconnect the controller to the mains electrical supply when it is completely dry.

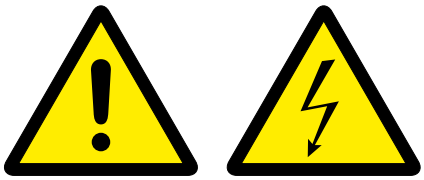

General danger Electrical hazard

All works may only be carried out by skilled personnel following the local regulations and AFTER the controller is completely isolated from the mains. Replace fuse only with same type and rating.

ENVIRONMENT
ECONOMICAL
EXPERTISE

EEID – ELECTRONIC SINGLE PHASE

INDEPENDENT DRIVE

FEATURES

- Independent control of fan speed. Infinitely variable from max to min with off position
- Supply 230 VAC, 50/60 Hz, 1 Phase
- IP54 Surface & IP44 Inset ingress protection rating
- Two wire control
- Clear indication light
- Commissioning adjustable minimum speed pre-set to 20% via internal potentiometer
- Fuse 5*20mm, spare included
- RAL9010 white ivory enclosure and face. Internal polyamide.
- Max ambient temperature: +50°C

DESCRIPTION

Our EEID drive is a compact wall mounted speed controller designed for single phase voltage controllable motors (230 VAC, 50/60 Hz). It varies the output voltage by using a optotriac phase angle control.

Operational status is indicated by an LED, while a hand controlled dial provides an on/off switch and the means to infinitely control fan speed.

Suitable for inset or surface mounting with the splash-resistant housing provided.

RANGE AND MOTOR PROTECTION

To ensure correct drive selection, please choose a drive that has an amp rating that is equal to or above the fan motor full load current (FLC).

If motors are fitted with thermostat (Tk) overheat protection, we recommend the use of our EEDS controller type instead of our EEID.

MODEL	EEID0.5A	EEID1.5A	EEID2.5A	EEID4A
Part	**EA900109**	**EA900110**	**EA900111**	**EA900102**
Current rating (A)	0.05 - 0.5	0.1 - 1.5	0.2 – 2.5	0.4 – 4
Fuse (A) 5*20mm	F0.63A H	F1.20A H	F3.15A H	F5.0A H
Ingress Protection	IP44/54	IP44/54	IP44/54	IP54*

*Surface mount only

WIRING DIAGRAM

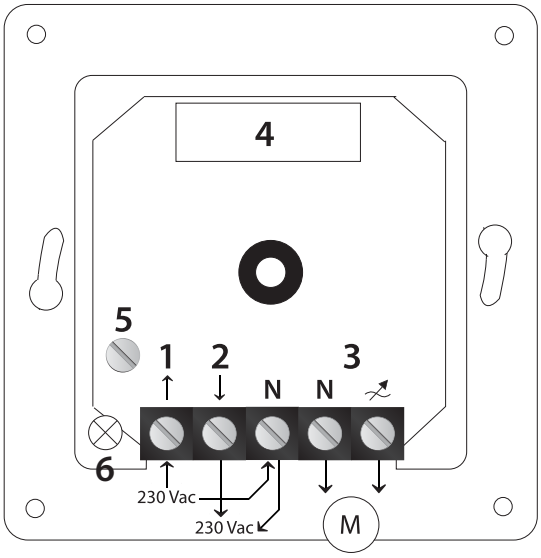

1 - Power supply 230 VAC, 50 Hz
2 - 230 VAC non-regulated output for connecting valve, dampers
N - Neutral
3 - Regulated output to motor
4 - Fuse holder with spare
5 - Minimum speed adjustment trimmer (pre-set to 20%)
6 - Control light

DIMENSIONS AND WEIGHTS

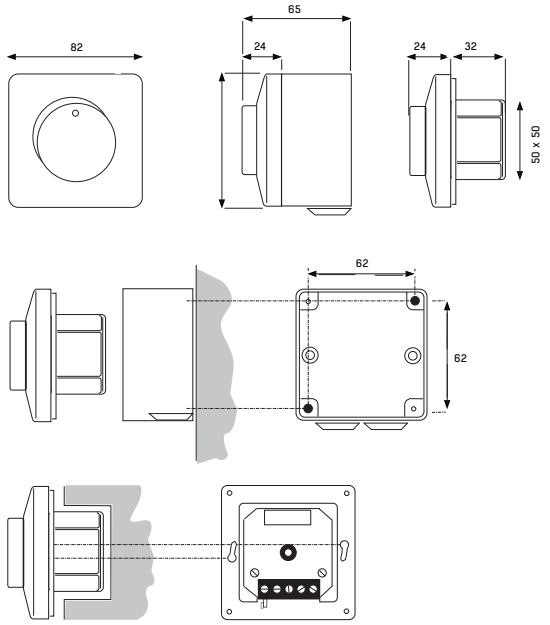

All dimensions shown in mm

MODEL	EEID1A	EEID2A	EEID4A
Part	EA900100	EA900101	EA900102
Net Weight (g)	210	215	300
Gross Weight (g)	235	240	325

COMPATIBILITY

Our EEID Speed controller is suitable for use with single phase voltage controllable motors.

INSET MOUNTING (IP 44)

Break (Isolate) mains voltage. Connect according to diagram. Mount inner case to the wall with connections pointing down. Turn on mains voltage and controller. Adjust min. speed with insulated screwdriver and turn off controller. Mount cover with nut to the wall. Push knob in place at off position.

SURFACE MOUNTING (IP 54)

Break (Isolate) mains voltage. Mount surface mounting case to the wall together with included grommets. Connect according to diagram. Turn on mains voltage and controller. Adjust min. speed with insulated screwdriver and turn off controller. Mount cover with nut to surface mounting case. Push control dial in place at off position.

ADJUSTMENT

Trimmer (MIN) - Adjust with insulated screwdriver so that the motor does not stop due to variations of mains voltage and that it restarts after power failure.

ISOLATION AND ISOLATION AND WIRING (SEE DIAGRAM ON PREVIOUS PAGE)

A safety isolator/disconnect switch should be installed on the mains electricity side of all motor drives; Please refer to SISO product.

We recommend three wire control for increased speed stability and low speed starting.

CHANGE OF FUSE

Break (Isolate) mains voltage. Undo control dial by first turning it to the right beyond end stop and then pull towards you.. Remove the nut. Remove fuse holder with a screwdriver. Change fuse. Replace components in reverse order. Use only recommended fuses (Approved, fast, with high breaking capacity).

MOTOR PROTECTION

If motors are fitted with thermostat (Tk) overheat protection it is recommended to use the EEDS range to utilise this feature.

WARRANTY

Any modifications or alterations to the product relieve the manufacturer of all responsibility. The manufacturer bears no responsibility for any misprints or mistakes in this data, and modifications or improvements to the product can be made at any time after date of publication.

MAINTENANCE

In normal conditions our controllers are maintenance-free. If external surfaces requires light cleaning, please use a dry or slightly damp cloth. If heavy cleaning is needed, then we recommend the use of a non-aggressive cleaning product. Particular attention should be paid to ensure that no fluids enter the controller. Only reconnect the controller tothe mains electrical supply when it is completely dry.

General danger

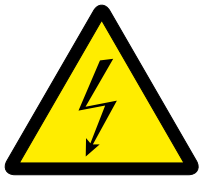

Electrical hazard

All works may only be carried out by skilled personnel following the local regulations and AFTER the controller is completely isolated from the mains. Replace fuse only with same type and rating.

ENVIRONMENT
ECONOMICAL
EXPERTISE

EEDS – ELECTRONIC SINGLE PHASE

DEMAND PROPORTIONAL DRIVE

FEATURES

- Switched control of fan speed. Infinitely variable from max to min with on/off switch
- Supply: 230 VAC, 50/60 Hz, 1 Phase
- IP 54 ingress protection
- In built motor overheat protection via motor thermostats (Tk)
- BMS enable/disable (Fault via Tk)
- Two wire control
- Switched input / startup to front dial setting/ kick start: 6-7 sec. full speed
- Minimum and maximum speed setting trimmers
- Plastic enclosure (R-ABS, UL94-V0, grey RAL 7035), IP 54
- Max ambient temperature: +50°C

OPTIONAL ACCESSORIES

- PIR
- Temp Switch
- CO_2 Switch

DESCRIPTION

Our EEDS drive is a wall mounted speed controller designed for single phase voltage controllable motors (230 VAC, 50/60 Hz).

The controller has connections for motors equipped with thermostat (Tk) overheat protection (NC-contact). When overheating is detected power to the motor is disconnected. The red indicator light and alarm output will signal this error condition (reset: main switch to off position and back).

The working principle of this product series is based on zero crossing detection. An optotriac combined with a microprocessor ensures flawless and accurate control.

OC (open contact - normal mode) and CC (closed contact - normal mode) inputs are provided for remote starting and stopping via thermostats, PIR and/or frost protection, etc.

There is a potentiometer and a separate on/off switch with built-in illumination. The terminal board has a supplementary connection to branch off non-controlled 230 V.

RANGE

To ensure correct drive selection, please choose a drive that has an amp rating that is equal to or above the fan motor full load current (FLC).

If motors are fitted with thermostat (Tk) overheat protection, then this drive is specifically designed to take advantage of this level of protection.

Model	EEDS3A	EEDS6A	EEDS10A
Part	EA900103	EA900104	EA900105
Current rating (A)	0.1 – 3.0	0.5 – 6.0	0.5 – 10.0
Fuse (A) 5*20mm	F5 A-H	F8 A-H	F14 A-H (6X32)
Ingress Protection	IP54	IP54	IP54

WIRING DIAGRAM

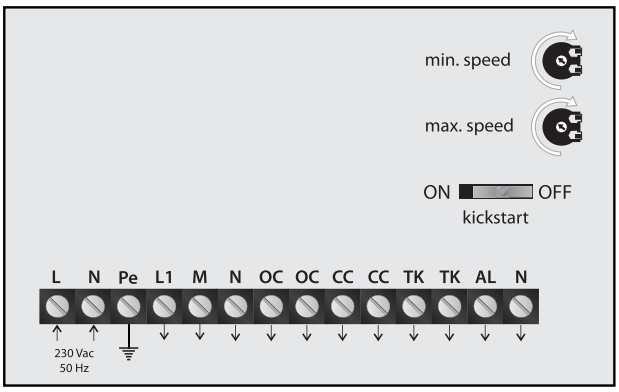

L-N - Power supply 230 VAC, 50 Hz, 1 Phase

Pe - Power earth

L1 - 230 VAC unregulated output

OC - Normal open contact, thermostat, timer, frost protection, PIR, BMS remote on/off

CC - Normal closed contact (inverse logical)

N-AL - Alarm output in case of motor fault 230 VAC, 0,6 A (150 W)

TK – Connection for motor thermostat over heat protection. Can be used for BMS fault.

M-N - Motor connection

Min. speed - from 70 to 150 V – Pre-set 20%

Max. speed - from 170 to 230 V – Pre-set 100%

DIMENSIONS AND WEIGHTS

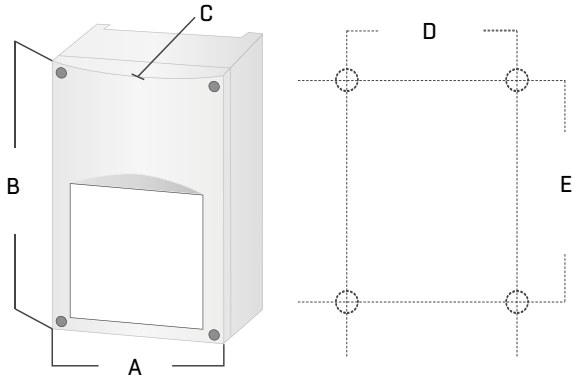

Model	A	B	C	D	E	Net g	Gross g
EEDS3A	83	160	66	71	108	420	440
EEDS6A	113	178	92	102	140	675	765
EEDS10A	113	178	92	102	140	650	740

COMPATIBILITY

Speed controller for voltage controllable single phase motors

MOUNTING

Break (Isolate) mains voltage. Our EEDS Speed controller is suitable for use with single phase voltage controllable motors. Connect voltage supply, motor(s) and earth as shown in the wiring diagram with cables of the proper diameter.

1. Break (Isolate) mains voltage & be sure that the controller is in OFF position.
2. Take off the box cover by loosening the four screws. Note that the potentiometer is connected to the PCB with two wires.
3. Connect mains, motor(s) and earth cables of the proper diameter to the terminals according to the wiring diagram.
4. Start the controller and with insulated screwdriver adjust the minimum speed: with the potentiometer at minimum, adjust the trimmer so that the motor continues running or restarts smoothly in case of power faults. The minimum speed is factory pre-set at 20% speed.
5. Close the box and verify the installation.
6. When reconnecting mains voltage if the green LED is flashing the connector for the external trimmer is unplugged.

ISOLATION AND ISOLATION AND WIRING (SEE DIAGRAM ON PREVIOUS PAGE)

If TK-TK is not operational: Link TK-TK

A safety isolator/disconnect switch should be installed on the mains electricity side of all motor drives; Please refer to SISO product.

We recommend three wire control for increased speed stability and low speed starting.

TRANSPORT AND STOCK KEEPING

Avoid shocks. Store in original packing. Avoid extreme conditions.

WARRANTY

Any modifications or alterations to the product relieve the manufacturer of all responsibility. The manufacturer bears no responsibility for any misprints or mistakes in this data, and modifications or improvements to the product can be made at any time after date of publication.

MAINTENANCE

In normal conditions our controllers are maintenance-free. If external surfaces requires light cleaning, please use a dry or slightly damp cloth. If heavy cleaning is needed, then we recommend the use of a non-aggressive cleaning product. Particular attention should be paid to ensure that no fluids enter the controller. Only reconnect the controller to the mains electrical supply when it is completely dry.

MOTOR PROTECTION

For use with motors fitted with thermostat (Tk) (NC contact) overheat protection.

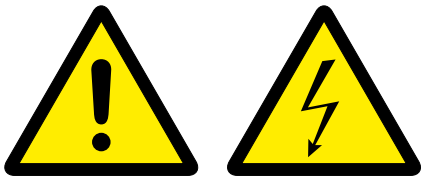

General danger Electrical hazard

All works may only be carried out by skilled personnel following the local regulations and AFTER the controller is completely isolated from the mains. Replace fuse only with same type and rating.

ENVIRONMENT
ECONOMICAL
EXPERTISE

EEDP – ELECTRONIC SINGLE PHASE

DEMAND PROPORTIONAL DRIVE

FEATURES

- Proportional control of fan speed via 0-10VDC control signal with on/off switch
- Supply: 230 VAC, 50/60 Hz, 1 Phase
- IP54 ingress protection
- In built motor overheat protection via motor thermostat (Tk). Can be used for BMS fault.
- Two & Three wire control
- BMS enable/disable (Fault via Tk)
- Control signal input: 0-10 VDC Supply: 12 VDC e.g. CO_2, pressure and temperature sensor
- Minimum and maximum speed setting trimmers
- Plastic enclosure (R-ABS, UL94-V0, grey RAL 7035), IP 54
- Max ambient temperature: +50°C

OPTIONAL ACCESSORIES

- PIR
- Temp Sensor
- CO_2 Sensor
- 0-10 V pot

DESCRIPTION

Our EEDP drive automatically controls the speed of single phase (230 VAC, 50/60 Hz) voltage controllable electric motor with a 0-10 VDC or 0-20 mA control signal. It is possible to invert the control signal to 10-0 VDC, 20-0 mA.

An illuminated external power switch is provided to confirm status.

A supplementary terminal block is provided to branch off 230 VAC non-controlled for 3-wire motor connection or damper operation.

The working principle of this product series is based on zero crossing detection. An optotriac combined with a microprocessor ensures flawless and accurate control.

A kick start feature is selectable internally to start the motor for a duration of 10 seconds at maximum speed.

Our EEDP controllers have inbuilt connections for thermostat (Tk) motor protection (NC-contact). When the motor thermostats open, because of motor overheating, the circuit is broken and the controller disconnects power to the motor. After eliminating the cause of overheating the fan can be restarted by turning off the controller for a few moments.

RANGE

For selection of the correctly current rated drive select the model with a current rating equal to or above the fan full load current (FLC).

Model	EEDP3A	EEDP6A	EEDP10A
Part	EA900106	EA900107	EA900108
Current rating (A)	0.1 – 3.0	0.5 – 6.0	0.5 – 10.0
Fuse (A) 5*20mm	F5 A-H	F10. A-H	F16 A-H (6x32)
Ingress Protection	IP54	IP54	IP54

WIRING DIAGRAM

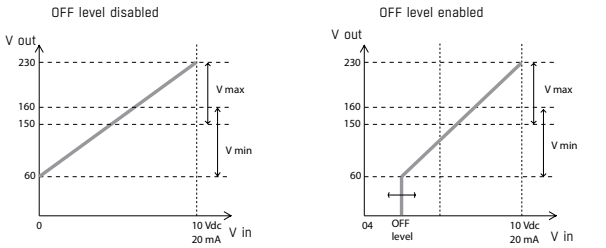

Calculation formula

V out = {(V in/10)*(V max-V min)}+V min

V out = {((V in-OFF-level)/(10-OFF-level))*(V max-V min)}+V min

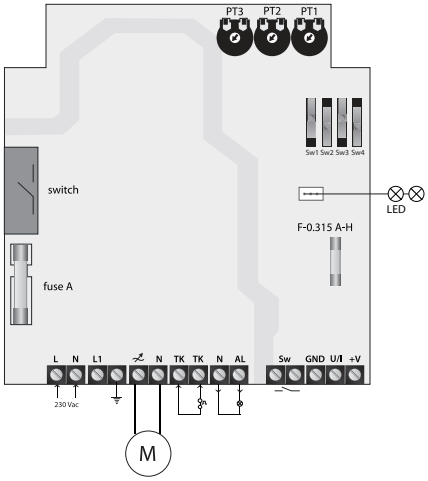

See page overleaf for wiring diagram key.

L - Mains supply 230 VAC, 50 Hz

N - Neutral

L1 - 230 VAC unregulated output (Imax 2 A)

Earth - Terminal (only for 3, 6 & 10 A)

M - Regulated output to motor

TK – Connections for motor thermostat (Tk) overheat protection. Can be used for BMS fault.

N AL - Alarm output 230 VAC, 1 A

Sw - Switch BMS enable/disable (Fault via Tk)

GND – Control Ground

UI - Control signal 0-10 VDC (input impedance 90 kOhm)

I - 0-20 mA (input impedance 250 Ohm)

+V - Low voltage power supply: 12 VDC, 1 mA for external potentiometer

Sw1 - Switch down = 0-10 V, up = 10-0 V

Sw2 - Switch down = disable off-level, up = enable off-level

Sw3 - Switch down = disable kick-start, up = enable kick-start

Sw4 - Switch down = 0-20 mA, up = 0-10 V (select current/ voltage)

PT1 - Max. speed adjustment trimmer, range: 165-230 V

PT2 - Min. speed adjustment trimmer, range: 60-160 V

PT3 - Off-level adjustment trimmer: 0-4 V or 10-6 V (depending on Sw1)

LED green: Normal operation. blinking: standby (input signal < off level).

red: motor overheated (reset device by turning off and on again)

DIMENSIONS AND WEIGHTS

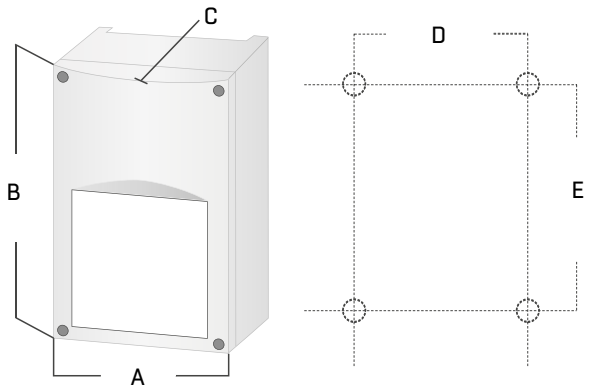

Model	A	B	C	D	E	Net g	Gross g
EEDP3A	113	178	92	102	140	700	815
EEDP6A	113	178	92	102	140	860	975
EEDP10A	113	178	92	102	140	860	975

COMPATIBILITY

Our EEDP Speed controller is suitable for use with single phase voltage controllable motors.

MOUNTING

Break (Isolate) mains voltage. Ensure that this controller is mounted on a smooth flat surface. Connect voltage supply, motor(s) and earth as shown in the scheme with cables of the proper diameter.

ISOLATION AND WIRING (SEE DIAGRAM ON PREVIOUS PAGE)

If TK-TK is not operational: Link TK-TK

A safety isolator/switch disconnector should be installed on the mains side of the drive; refer to SISO.

We recommend three wire control for increased speed stability and low speed starting.

TRANSPORT AND STOCK KEEPING

Avoid shocks. Stock in original packing. Avoid extreme conditions.

MOTOR PROTECTION

Connections provided for motors with thermostat (Tk) overheat protection (NC contacts).

WARRANTY

Any modifications or alterations to the product relieve the manufacturer of all responsibility. The manufacturer bears no responsibility for any misprints or mistakes in this data, and modifications or improvements to the product can be made at any time after date of publication.

MAINTENANCE

In normal conditions our controllers are maintenance-free. If external surfaces requires light cleaning, please use a dry or slightly damp cloth. If heavy cleaning is needed, then we recommend the use of a non-aggressive cleaning product. Particular attention should be paid to ensure that no fluids enter the controller. Only reconnect the controller to the mains electrical supply when it is completely dry.

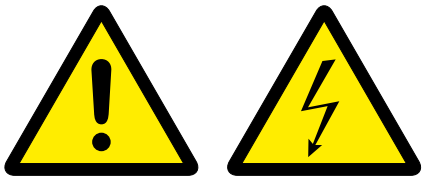

General danger Electrical hazard

All works may only be carried out by skilled personnel following the local regulations and AFTER the controller is completely isolated from the mains. Replace fuse only with same type and rating.

ENVIRONMENT
ECONOMICAL
EXPERTISE

TEID – TRANSFORMER SINGLE PHASE

INDEPENDENT DRIVE

FEATURES

- Independent transformer 5 step speed control for fans with off position
- Supply: 230 VAC, 50/60 Hz, 1 Phase
- IP54 ingress protection
- Switch: 5 positions with off-position
- Indicator light
- Current fuse
- 230 VAC unregulated output
- Ready mounted cable glands
- Enclosure: plastic (R-ABS, UL94-V0, grey RAL 7035) or sheet steel (RAL 7035)
- Max ambient temperature: +50°C

DESCRIPTION

Our TEID transformer speed controllers are based on the principle of voltage control using autotransformers. They are applicable to single phase voltage controllable motors (230 V, 50/60 Hz) to control the rotational speed of fans in five steps.

RANGE

To ensure correct drive selection, please choose a drive that has an amp rating that is equal to or above the fan motor full load current (FLC).

Model	TEID1A	TEID1.5A	TEID2.2A	TEID3.5A	TEID5A	TEID7.5A	TEID13A
Part	**EA900000**	**EA900001**	**EA900002**	**EA900003**	**EA9000004**	**EA900005**	**EA900006**
Lmax (A)	1	1.5	2.2	3.5	5	7.5	13
Fuse (A)	1.25	2.5	3.15	5	8	10	20
IP Rate	IP54	IP54	IP54	IP54	IP54	IP54	IP54

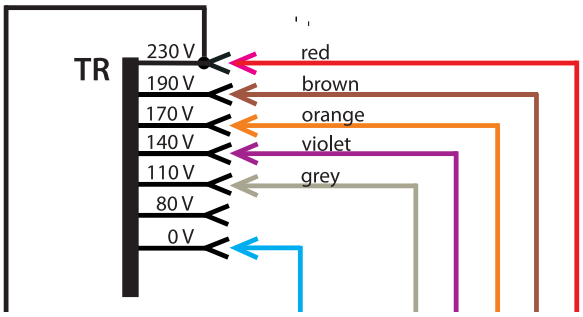

TRANSFORMER SETTINGS AND WIRING DIAGRAM

The order of switching and the voltage corresponding to each step of a particular switch can be changed by moving the internally mounted clip connectors within this transformer unit. Factory defaults are shown below:

Voltage Tap	0	80	110	140	170	190	230
SWITCH POSITION			1	2	3	4	5

L-N - Power supply 230 VAC, 50/60 Hz

L1 N1 - Unregulated output 230 VAC (2 A)

N-U - Motor connection

Pe - Earth connections

TEID1A

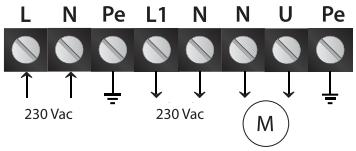

TEID1.5A-2.2A

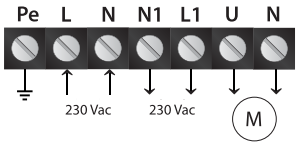

TEID3.5A-13A

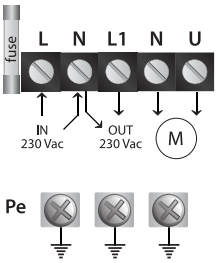

DIMENSIONS AND WEIGHTS

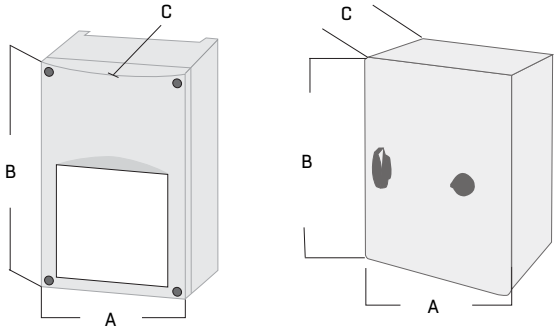

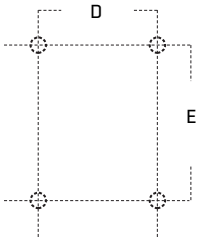

Model	A	B	C	D	E	Net kg	Gross kg	Enclosure
TEID1A	84	160	88	71	108	1.2	1.3	Plastic
TEID1.5A	115	205	100	98	140	1.9	2.1	Plastic
TEID2.2A	115	205	100	98	140	2.1	2.3	Plastic
TEID3.5A	170	255	140	155	194	4.5	4.7	Plastic
TEID5A	170	255	140	155	194	5	5.4	Plastic
TEID7.5A	200	305	140	183	236	7.6	8	Plastic
TEID13A	300	325	185	255	255	14.8	15.3	Steel

COMPATIBILITY

Our TEID Speed controller is suitable for use with single phase voltage controllable motors.

MOUNTING

Break (Isolate) mains voltage. Ensure that this controller is mounted on a smooth flat surface. Connect voltage supply, motor(s) and earth as shown in the scheme with cables of the proper diameter.

ISOLATION AND WIRING (SEE DIAGRAM ON PREVIOUS PAGE)

A safety isolator/disconnect switch should be installed on the mains electricity side of all motor drives; Please refer to SISO product.

MOTOR PROTECTION

If motors are fitted with thermostat (Tk) overheat protection it is recommended to use the TEDS range to utilise this feature.

TRANSPORT AND STOCK KEEPING

Avoid shocks and extreme conditions. Stock in original packing.

WARRANTY

Any modifications or alterations to the product relieve the manufacturer of all responsibility. The manufacturer bears no responsibility for any misprints or mistakes in this data, and modifications or improvements to the product can be made at any time after date of publication.

MAINTENANCE

In normal conditions our controllers are maintenance-free. If external surfaces requires light cleaning, please use a dry or slightly damp cloth. If heavy cleaning is needed, then we recommend the use of a non-aggressive cleaning product. Particular attention should be paid to ensure that no fluids enter the controller. Only reconnect the controller to the mains electrical supply when it is completely dry.

General danger

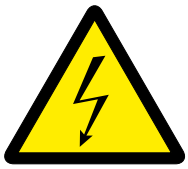

Electrical hazard

All works may only be carried out by skilled personnel following the local regulations and AFTER the controller is completely isolated from the mains. Replace fuse only with same type and rating.

ENVIRONMENT
ECONOMICAL
EXPERTISE

TEDS – TRANSFORMER SINGLE PHASE

DEMAND SWITCHED DRIVE

FEATURES

- Switched control of fan speed. Five steps with off position
- Supply: 230 VAC, 50/60 Hz, 1 Phase
- IP54 ingress protection
- In built motor overheat protection via motor thermostats (Tk). Can be used for BMS fault
- Switch: 5 positions with off-position
- BMS enable/disable (BMS fault via Tk)
- Indicator lights, on/fault
- Current fuse
- Auto reset after supply failure
- Run/stop contacts (CC - normally closed, CO – normally open, for thermostat/frost protection, PIR, BMS Enable/Disable)
- Ready mounted cable glands
- Enclosure: plastic (R-ABS, UL94-V0, RAL 7035); steel (RAL 7035, polyester powder coating)
- Maximum ambient temperature: +50°C

OPTIONAL ACCESSORIES

- PIR
- Temp Switch
- CO_2 Switch

DESCRIPTION

Our TEDS transformer speed controllers are based on the principle of voltage control using auto-transformers. They are applicable to single phase voltage-controllable motors (230 VAC, 50/60 Hz) to control the rotational speed of fans in five steps.

They are fitted with contacts for motor thermostat (Tk) overheat protection (NC contacts). OC and CC inputs are provided for remote starting and stopping via thermostats, PIR and/or frost protection, etc.

RANGE

For selection of the correctly current rated drive select the model with a current rating equal to or above the fan full load current (FLC).

Model	TEDS1.5A	TEDS2.5A	TEDS3.5A	TEDS5A	TEDS7.5A	TEDS13A
Part	**EA900007**	**EA900008**	**EA900009**	**EA900010**	**EA9000011**	**EA900012**
Lmax (A)	1.5	2.5	3.5	5.0	7.5	13
Fuse (A)	2.5	4	5	8	12.5	20
IP Rate	IP54	IP54	IP54	IP54	IP54	IP54

WIRING DIAGRAM

The order of switching and the voltage corresponding to each step of a particular switch can be changed by moving the internally mounted clip connectors within this transformer unit. Factory defaults are shown below:

Voltage Tap	0	80	110	140	170	190	230
Switch Position			1	2	3	4	5

TEDS1.5A-13A
L-N - Power supply 230 VAC, 50/60 Hz
L1 - Unregulated output 230 VAC (2 A)
M-N - Motor connection
CC - Contact normally closed
OC - Contact normally open
TK – Connection for motor thermostat. Can be used for BMS fault.
N-AL - Alarm output (230V - 1A)
Pe - Earth connections

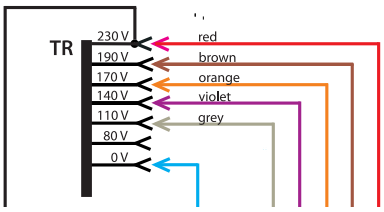

TEDS1.5A-7.5A

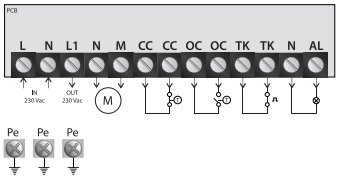

TEDS13A

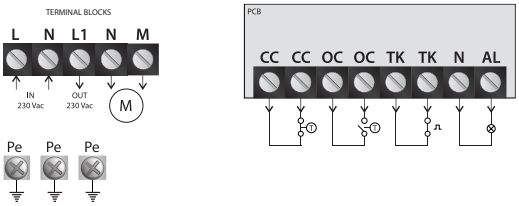

DIMENSIONS AND WEIGHTS

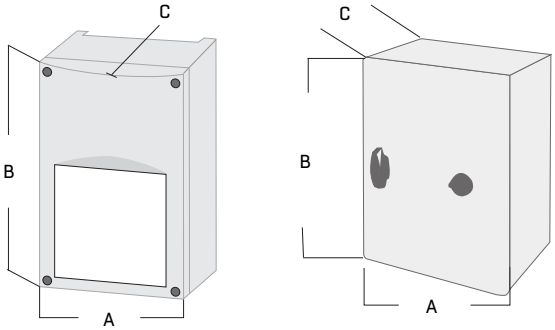

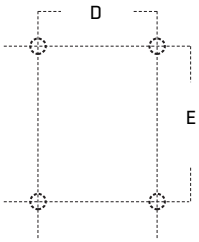

Model	A	B	C	D	E	Net kg	Gross kg	Enclosure
TEDS1.5A	170	255	140	155	194	3.6	3.9	Plastic
TEDS2.5A	170	255	140	155	194	3.6	3.9	Plastic
TEDS3.5A	170	255	140	155	194	4.6	4.9	Plastic
TEDS5A	170	255	140	155	194	5.6	5.9	Plastic
TEDS7.5A	200	305	155	183	236	8.3	8.7	Plastic
TEDS13A	300	325	185	255	255	16.4	16.9	Steel

COMPATIBILITY

Our TEDS Speed controller is suitable for use with single phase voltage controllable motors.

MOUNTING

Break (Isolate) mains voltage. Ensure that this controller is mounted on a smooth flat surface. Connect voltage supply, motor(s) and earth as shown in the scheme with cables of the proper diameter.

ISOLATION AND WIRING (SEE DIAGRAM ON PREVIOUS PAGE)

If TK-TK is not operational: Link TK-TK

A safety isolator/disconnect switch should be installed on the mains electricity side of all motor drives; Please refer to SISO product.

TRANSPORT AND STOCK KEEPING

Avoid shocks. Stock in original packing. Avoid extreme conditions.

WARRANTY

Any modifications or alterations to the product relieve the manufacturer of all responsibility. The manufacturer bears no responsibility for any misprints or mistakes in this data, and modifications or improvements to the product can be made at any time after date of publication.

MAINTENANCE

In normal conditions our controllers are maintenance-free. If external surfaces requires light cleaning, please use a dry or slightly damp cloth. If heavy cleaning is needed, then we recommend the use of a non-aggressive cleaning product. Particular attention should be paid to ensure that no fluids enter the controller. Only reconnect the controller to the mains electrical supply when it is completely dry.

MOTOR PROTECTION

The TEDS are fitted with contacts for motor thermostat (Tk) overheat protection. When motor contacts open due to motors overheating, the circuit is broken and the controller stops |the power to the motor. Reset by putting the switch in the "Off" position.

General danger

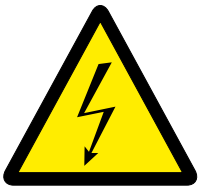

Electrical hazard

All works may only be carried out by skilled personnel following the local regulations and AFTER the controller is completely isolated from the mains. Replace fuse only with same type and rating.

TEDSD – TRANSFORMER SINGLE PHASE

DEMAND SWITCHED DUAL SPEED DRIVE

FEATURES

- Switched control of fan speed between two speeds. Five steps with off position
- Tickle and boost
- Supply: 230 VAC, 50/60 Hz, 1 Phase
- IP54 ingress protection
- In built motor overheat protection via motor thermostats (Tk). Can be used for BMS fault
- Switch: 5 positions with off-position & low/high
- BMS enable/disable
- Indicator light
- Run/stop contacts (CC - normally closed, OC –normally open) for PIR, thermostat etc.
- Enclosure: sheet steel (RAL 7035) / plastic (R-ABS, UL94-V0, RAL 7035)
- Maximum ambient temperature: +50°C

OPTIONAL ACCESSORIES

- PIR
- Temp Sensor
- CO_2 Sensor

DESCRIPTION

Our TEDSD transformer speed controllers are based on the principle of voltage control using auto-transformers. They are applicable to voltage-controllable single phase motors (230 VAC, 50/60 Hz) to control the rotational speed of fans.

Our TEDSD drive makes makes it possible to select two optimal motor speeds and to switch between these with a contact. Important energy savings and an increase of comfort can be realised e.g. through day/night, PIR, thermostat control.

The control is fitted with contacts for motor thermostat (Tk) overheat protection. Run/stop contacts (CC-closed/OC-open) for external or remote starting/stopping are also provided.

RANGE

For selection of the correctly current rated drive select the model with a current rating equal to or above the fan full load current (FLC).

Model	TEDSD1.5A	TEDSD2.5A	TEDSD3.5A	TEDSD5A	TEDSD7.5A	TEDSD13A
Part	EA900013	EA900014	EA900015	EA900016	EA9000017	EA900018
Lmax (A)	1.5	2.5	3.5	5.0	7.5	13
Fuse (A)	FT2.5	FT4	FT5	FT8	FT12.5	FT20
IP Rate	IP54	IP54	IP54	IP54	IP54	IP54

ENVIRONMENT
ECONOMICAL
EXPERTISE

WIRING DIAGRAM

L-N - Power supply 230 VAC, 50/60 Hz

L1 - Unregulated output 230 VAC (2 A)

M-N - Motor connection

CC - Contact normally closed

OC - Contact normally open

TK – Connection for motor thermostat. Can be used for BMS fault.

N-AL - Alarm output (1 A)

Pe - Earth connections

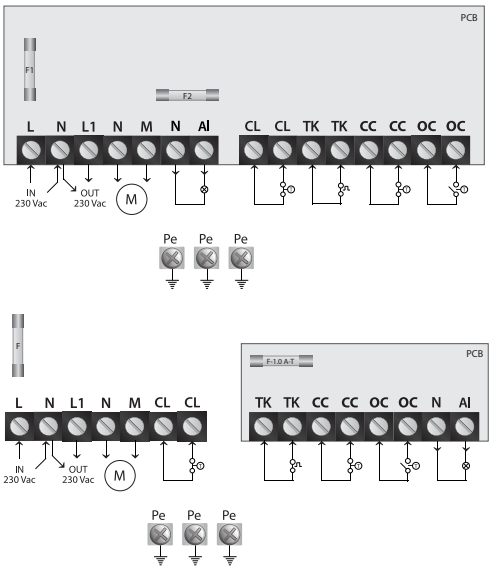

DIMENSIONS AND WEIGHTS

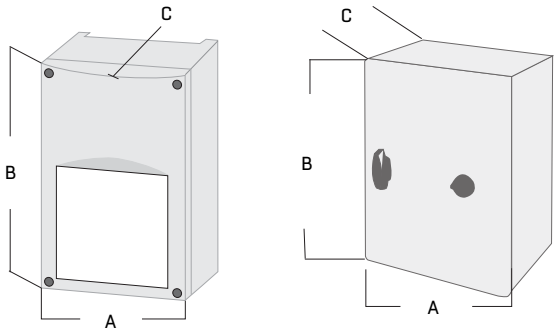

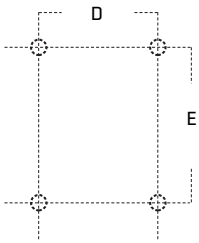

Model	A	B	C	D	E	Net kg	Gross kg	Enclosure
TEDSD1.5A	200	305	155	183	235	3.9	4.3	Plastic
TEDSD2.5A	200	305	155	183	235	4.4	4.8	Plastic
TEDSD3.5A	200	305	155	183	235	5.4	5.8	Plastic
TEDSD5A	200	305	155	183	235	6.2	6.5	Plastic
TEDSD7.5A	200	305	155	183	235	8.2	8.5	Plastic
TEDSD13A	300	425	175	255	355	17.6	18	Steel

COMPATIBILITY

Our TEDSD Speed controller is suitable for use with two speed, single phase voltage controllable motors.

MOUNTING

Break (Isolate) mains voltage. Ensure that this controller is mounted on a smooth flat surface. Connect voltage supply, motor(s) and earth as shown in the scheme with cables of the proper diameter.

ISOLATION AND WIRING (SEE DIAGRAM ON PREVIOUS PAGE)

If TK-TK is not operational: Link TK-TK

A safety isolator/disconnect switch should be installed on the mains electricity side of all motor drives; Please refer to SISO product.

TRANSPORT AND STOCK KEEPING

Avoid shocks. Stock in original packing. Avoid extreme conditions.

WARRANTY

Any modifications or alterations to the product relieve the manufacturer of all responsibility. The manufacturer bears no responsibility for any misprints or mistakes in this data, and modifications or improvements

to the product can be made at any time after date of publication.

MAINTENANCE

In normal conditions our controllers are maintenance-free. If external surfaces requires light cleaning, please use a dry or slightly damp cloth. If heavy cleaning is needed, then we recommend the use of a non-aggressive cleaning product. Particular attention should be paid to ensure that no fluids enter the controller. Only reconnect the controller to the mains electrical supply when it is completely dry.

MOTOR PROTECTION

The TEDS are fitted with contacts for motor thermostat (Tk) overheat protection. When motor contacts open due to motors overheating, the circuit is broken and the controller stops the power to the motor. Reset by putting the switch in the "Off" postion.

General danger

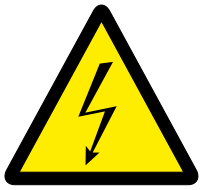

Electrical hazard

All works may only be carried out by skilled personnel following the local regulations and AFTER the controller is completely isolated from the mains. Replace fuse only with same type and rating.

ENVIRONMENT
ECONOMICAL
EXPERTISE

TEDP – TRANSFORMER SINGLE PHASE

DEMAND PROPORTIONAL DRIVE

FEATURES

- Proportional 5 step control of fan speed via 0-10VDC control signal
- Supply: 230 VAC, 50/60 Hz, 1 Phase
- IP54 ingress protection
- In built motor overheat protection via motor thermostats (Tk)
- Control signal input: 0-10 VDC Supply: 12 VDC e.g. CO_2, pressure and temperature sensor
- BMS enable/disable
- Indicator lights: run/fault
- Enclosure: plastic (R-ABS, UL94-V0, RAL 7035) or sheet steel (RAL 7035)
- Maximum ambient temperature: +50ºC

OPTIONAL ACCESSORIES

- PIR
- Temp Sensor
- CO_2 Sensor
- Pressure Sensor
- 0-10 V pot - (230 volt)

DESCRIPTION

Our TEDP transformer speed controllers are based on the principle of voltage control using auto-transformers. They are applicable to single phase voltage-controllable motors (230 V, 50/60 Hz) to control the rotational speed of fans.

Each transformer step is selected using a 0-10 VDC signal, which can, for example, be provided from an external source or via our Room Potentiometers (models SDPV10 or SDPV230).

TEDP drives are fitted connections for motors with thermostat (Tk) overheat protection.

RANGE

To ensure correct drive selection, please choose a drive that has an amp rating that is equal to or above the fan motor full load current (FLC).

Model	TEDP1.5A	TEDP2.5A	TEDP3.5A	TEDP5A	TEDP7.5A	TEDP13A
Part	EA900019	EA900020	EA900021	EA900022	EA900023	EA900024
Lmax (A)	1.5A	2.5A	3.5A	5.0A	7.5A	13A
Fuse (A)	2.0A	3.15A	5A	8A	12.5A	20A
IP Rate	IP54	IP54	IP54	IP54	IP54	IP54

SPEED SETTINGS AND WIRING DIAGRAM

Speed increases at: 2, 4, 6, 8, 9.5 VDC.

Speed reduces at: 1.8, 3.8, 5.8, 7.8, 9.3 VDC

Voltage Tap	0	80	110	140	170	190	230
Switch Position			1	2	3	4	5

L N - Power supply 230 VAC– 50/60 Hz

L1 N - Unregulated output 230 VAC (max. 2 A)

U N1 - Motor connection

TK - Input thermostat (Tk) from motor

0V - GND

+12V - Output 12 VDC/Imax = 50 mA (*Sum of the current for both outputs (+12V and +V) may not be greater than 100 mA))

+V - Digital output 12 VDC/ Imax = 50 mA* 0 V - TK fault 12 V - normal operation

V/C Input 0-10 VDC

Pe Earth connections

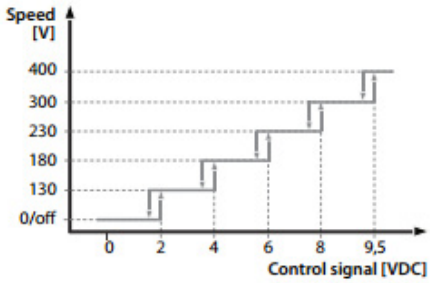

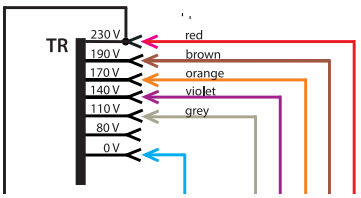

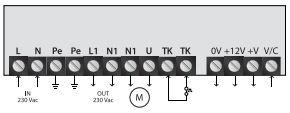

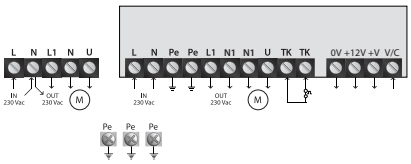

DIMENSIONS AND WEIGHTS

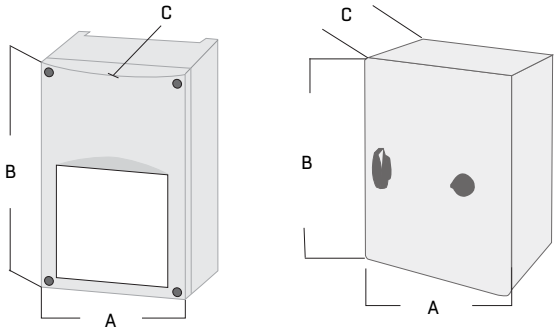

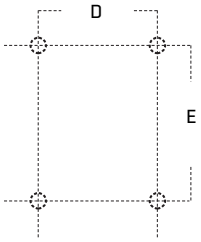

Model	A	B	C	D	E	Net kg	Gross kg	Enclosure
TEDP1.5A	200	305	140	183	236	4.4	5.7	Plastic
TEDP2.5A	200	305	140	183	236	4.5	4.8	Plastic
TEDP3.5A	200	305	140	183	236	5.7	6	Plastic
TEDP5A	200	305	140	183	236	6.4	6.7	Plastic
TEDP7.5A	200	305	140	183	236	8.6	8.9	Plastic
TEDP13A	300	325	170	255	255	15.9	16.2	Steel

COMPATIBILITY

Speed controller for single phase voltage controllable motors.

MOUNTING

Break (Isolate) mains voltage. Ensure that this controller is mounted on a smooth flat surface. Connect voltage supply, motor(s) and earth as shown in the scheme with cables of the proper diameter and in accordance with local regulations.

ISOLATION AND WIRING (SEE DIAGRAM ON PREVIOUS PAGE)

Connecting the input signal: a separate 0-10V signal is provided. In this case only 0V and V/C will be needed, connect negative line to the "0V" TB and the + or 0-10V to the "V/C" TB. The

"+V" TB provides status feedback: Normal operation: 12V (max 70 mA); Over temp fault: 0V.

If TK is not used: Link TK-TK

A safety isolator/disconnect switch should be installed on the mains electricity side of all motor drives; Please refer to SISO product.

TRANSPORT AND STOCK KEEPING

Avoid shocks and extreme conditions, stock in original packing.

WARRANTY

Any modifications or alterations to the product relieve the manufacturer of all responsibility. The manufacturer bears no responsibility for any misprints or mistakes in this data, and modifications or improvements to the product can be made at any time after date of publication.

MAINTENANCE

In normal conditions our controllers are maintenance-free. If external surfaces requires light cleaning, please use a dry or slightly damp cloth. If heavy cleaning is needed, then we recommend the use of a non-aggressive cleaning product. Particular attention should be paid to ensure that no fluids enter the controller. Only reconnect the controller to the mains electrical supply when it is completely dry.

MOTOR PROTECTION

The controller has connections for motors fitted with thermostat (Tk) overheat protection (NC contacts). Reset: disconnect and reconnect power.

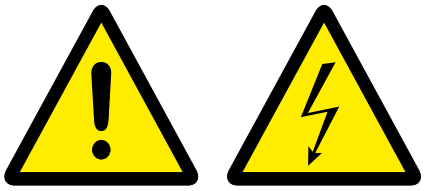

General danger Electrical hazard

All works may only be carried out by skilled personnel following the local regulations and AFTER the controller is completely isolated from the mains. Replace fuse only with same type and rating

ENVIRONMENT
ECONOMICAL
EXPERTISE

TDID – TRANSFORMER THREE PHASE

INDEPENDENT DRIVE

FEATURES

- Independent 5 step transformer drive with motor overheat protection via thermostats
- Supply: 400 VAC, 50/60 Hz, 3 Phase
- IP54 ingress protection
- In built motor overheat protection via motor thermostats (Tk)
- Switch: 5 positions with off-position
- Indicator light
- 230 VAC unregulated output
- Enclosure: plastic (R-ABS, UL94-V0, RAL 7035) / sheet steel (RAL 7035)
- Maximum ambient temperature: +50°C

DESCRIPTION

Our TDID transformer speed controllers are based on the principle of voltage control using auto-transformers. They are applicable to three phase voltage-controllable motors (400 VAC, 50/60 Hz), to control the rotational speed of fans in five steps.

They are fitted out with contacts for motors equipped with thermostat (Tk) overheat protection.

RANGE

To ensure correct drive selection, please choose a drive that has an amp rating that is equal to or above the fan motor full load current (FLC).

Model	TDID2.5A	TDID4A	TDID8A	TDID11A
Part	**EA900025**	**EA900026**	**EA900027**	**EA900028**
Lmax (A)	2.5	4	8	11
IP Rate	IP54	IP54	IP54	IP54

WIRING DIAGRAM

R S T - power supply 400 VAC– 50/60 Hz N - Neutral

L1 - unregulated output 230 VAC (2 A)

U V W - motor connection

TK - input thermal contacts of the motor

Pe - earth connections

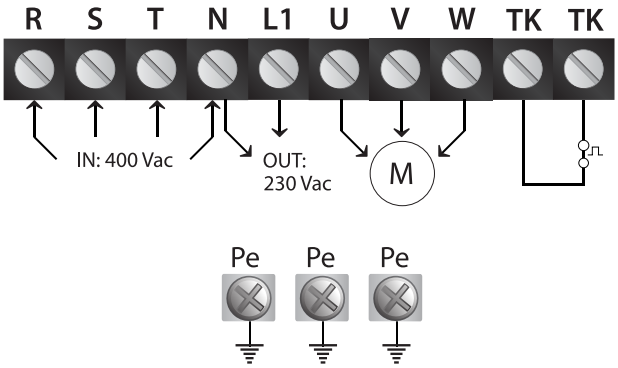

DIMENSIONS AND WEIGHTS

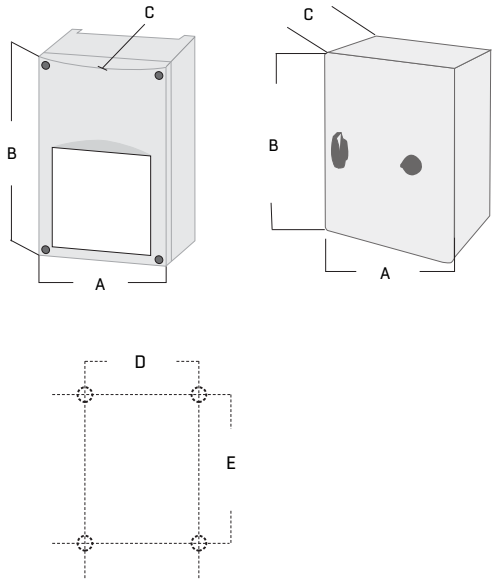

Model	A	B	C	D	E	Net kg	Gross kg	Enclosure
TDID2.5A	300	325	175	255	255	13.2	13.5	Steel
TDID4A	300	425	175	255	355	18.2	18.7	Steel
TDID8A	300	425	235	255	355	36.4	37	Steel
TDID11A	400	430	235	355	355	38.4	39	Steel

COMPATIBILITY

Speed controller for three phase voltage controllable motors.

MOUNTING

Break (Isolate) mains voltage. Ensure that this controller is mounted on a smooth flat surface. Connect voltage supply, motor(s) and earth as shown in the scheme with cables of the proper diameter.

ISOLATION AND WIRING (SEE DIAGRAM ON PREVIOUS PAGE)

A safety isolator/disconnect switch should be installed on the mains electricity side of all motor drives; Please refer to SISO product.

TRANSPORT AND STOCK KEEPING

Avoid shocks. Stock in original packing. Avoid extreme conditions.

WARRANTY

Any modifications or alterations to the product relieve the manufacturer of all responsibility. The manufacturer bears no responsibility for any misprints or mistakes in this data, and modifications or improvements to the product can be made at any time after date of publication.

MAINTENANCE

In normal conditions our controllers are maintenance-free. If external surfaces requires light cleaning, please use a dry or slightly damp cloth. If heavy cleaning is needed, then we recommend the use of a non-aggressive cleaning product. Particular attention should be paid to ensure that no fluids enter the controller. Only reconnect the controller to the mains electrical supply when it is completely dry.

MOTOR PROTECTION

The controller has contacts for motors with thermostat (Tk) overheat protection (NC-contact). When motor overheating (or a power failure) is detected the controller stops power to the motor. The red indicator light and alarm output will signal this error condition. (Reset: main switch to off position and back).

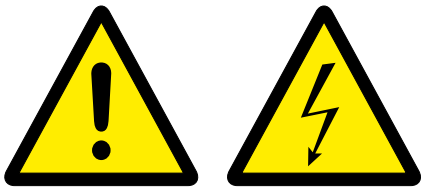

General danger Electrical hazard

All works may only be carried out by skilled personnel following the local regulations and AFTER the controller is completely isolated from the mains.

ENVIRONMENT
ECONOMICAL
EXPERTISE

TDDS – TRANSFORMER THREE PHASE

DEMAND SWITCHED DRIVE

FEATURES

- Switched 5 step transformer controller with motor thermostat (Tk) overheat protection
- Supply: 400 VAC, 50/60 Hz, 3 Phase
- IP54 ingress protection
- In built motor overheat protection via motor thermostats (Tk)
- Switch: 5 positions with off-position
- BMS enable/disable and fault
- Run/Stop contacts (CC - normally closed, OC – normally open) for remote control
- Enclosure: sheet steel (RAL 7035, polyester powder coating)
- Maximum ambient temperature: +50°C

OPTIONAL ACCESSORIES

- PIR
- Temp Switch
- CO_2 Switch

DESCRIPTION

The TDDS transformer speed controllers are based on the principle of voltage control with autotransformers. They are applicable to three phase voltage-controllable motors (400 VAC, 50/60 Hz), to control the rotational speed of fans in five steps.

They are fitted with contacts for motors with thermostat (Tk) overheat protection and run/stop contacts (CC-closed/OC-open) for external or remote starting and stopping via PIR, thermostats, BMS enable/disable etc.

A safety isolator/switch disconnector should be installed on the mains side of the drive; refer to SISO.

RANGE

For selection of the correctly current rated drive select the first model with a current rating above the fan full load current (FLC) to be controlled.

Model	TDDS2.5A	TDDS4A	TDDS8A	TDDS11A
Part	EA900029	EA900030	EA900031	EA900032
Lmax (A)	2.5	4	8	11
IP Rate	IP54	IP54	IP54	IP54

WIRING DIAGRAMS

R S T - power supply 400 VAC– 50/60 Hz

N - Neutral

L1 - unregulated output 230 VAC (2 A)

U V W - motor connection

TK - input thermal contacts of the motor

CC - contact normally closed

OC - contact normally open

N-AL - alarm output (230 VAC/1 A

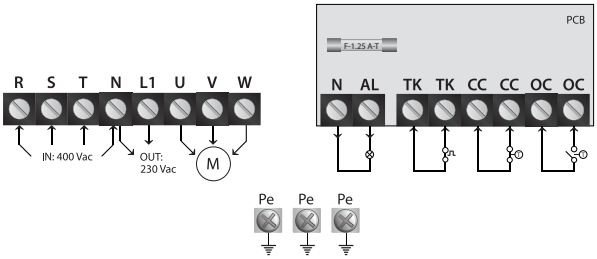

DIMENSIONS AND WEIGHTS

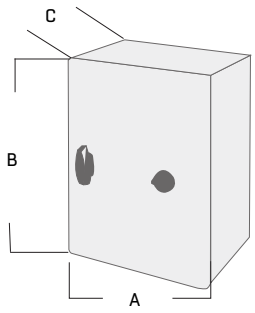

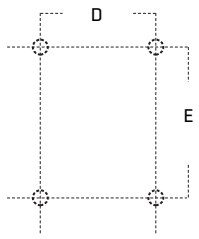

Model	A	B	C	D	E	Net kg	Gross kg	Enclosure
TDDS2.5A	300	325	175	255	255	13.4	13.9	Steel
TDDS4A	300	425	175	255	355	18.6	19.1	Steel
TDDS8A	300	425	235	255	355	27.9	28.4	Steel
TDDS11A	400	430	235	355	355	37.8	38.5	Steel

COMPATIBILITY

Speed controller for three phase voltage controllable motors.

MOUNTING

Break (Isolate) mains voltage. Ensure that this controller is mounted on a smooth flat surface. Connect voltage supply, motor(s) and earth as shown in the scheme with cables of the proper diameter.

ISOLATION AND WIRING (SEE DIAGRAM ON PREVIOUS PAGE)

A safety isolator/disconnect switch should be installed on the mains electricity side of all motor drives; Please refer to SISO product.

TRANSPORT AND STOCK KEEPING

Avoid shocks. Stock in original packing. Avoid extreme conditions.

WARRANTY

Any modifications or alterations to the product relieve the manufacturer of all responsibility. The manufacturer bears no responsibility for any misprints or mistakes in this data, and modifications or improvements to the product can be made at any time after date of publication.

MAINTENANCE

In normal conditions our controllers are maintenance-free. If external surfaces requires light cleaning, please use a dry or slightly damp cloth. If heavy cleaning is needed, then we recommend the use of a non-aggressive cleaning product. Particular attention should be paid to ensure that no fluids enter the controller. Only reconnect the controller to the mains electrical supply when it is completely dry.

MOTOR PROTECTION

The controller has contacts for motors with thermostat (Tk) overheat protection (NC-contact). When motor overheating (or a power failure) is detected the controller stops power to the motor. The red indicator light and alarm output will signal this error condition. (Reset: main switch to off position and back).

General danger

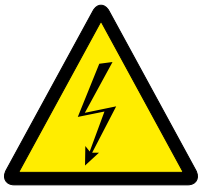

Electrical hazard

All works may only be carried out by skilled personnel following the local regulations and AFTER the controller is completely isolated from the mains.

ENVIRONMENT
ECONOMICAL
EXPERTISE

TDDSD – TRANSFORMER THREE PHASE

DEMAND SWITCHED DUAL SPEED DRIVE

FEATURES

- Dual switched 5 step transformer control with motor thermostat (Tk) protection
- Trickle and Boost
- Supply: 400 VAC, 50/60 Hz, 3 Phase
- IP 54 ingress protection
- In built motor overheat protection via motor thermostats. Can be used for BMS fault.
- BMS enable/disable (BMS fault via Tk) Run/Stop contacts (CC, OC)
- Enclosure: sheet steel (RAL 7035, polyester powder coating)
- Maximum ambient temperature: +50°C

OPTIONAL ACCESSORIES

- PIR
- Temp Switch
- CO_2 Switch

DESCRIPTION

Our TDDSD transformer speed controllers are based on the principle of voltage control using auto-transformers. They are applicable to three phase voltage-controllable motors (400 V, 50/60 Hz) to control the rotational speed of fans.

This controller makes it possible to select two optimal motor speeds and to switch these by a contact. Important energy savings and an increase of comfort can be realised. e.g. thermostat, PIR control.

They are fitted with connections for motor thermostat (Tk) overheat protection and run/stop contacts (CC-closed/OC-open) for external or remote starting e.g. PIR, thermostat, BMS enable/disable.

RANGE

To ensure correct drive selection, please choose a drive that has an amp rating that is equal to or above the fan motor full load current (FLC).

Model	TDDSD2.5A	TDDSD4A	TDDSD8A	TDDSD11A
Part	EA900033	EA900034	EA900035	EA900036
Lmax (A)	2.5	4	8	11
IP Rate	IP54	IP54	IP54	IP54

WIRING DIAGRAMS

TDDSD2.5A

R S T - power supply 400 VAC, 50/60 Hz

N - Neutral

L1 - unregulated output 230 VAC (max 2 A)

U V W - motor connection

CL - contact normally closed (external clock – high/low switching)

TK - input thermal contacts of the motor

CC - contact normally closed

OC - contact normally open

N-AL - alarm output (230 VAC/1 A)

Pe - earth connections

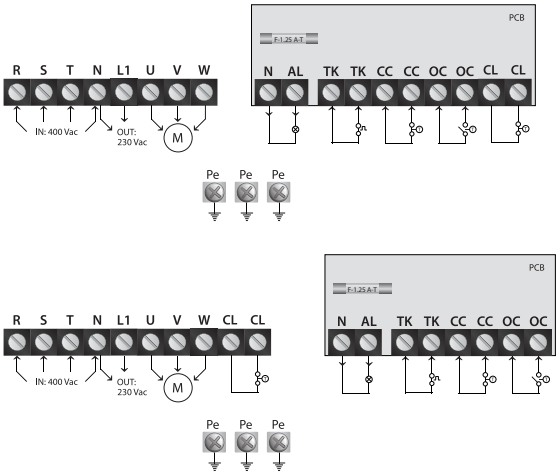

DIMENSIONS AND WEIGHTS

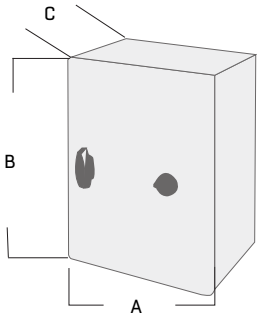

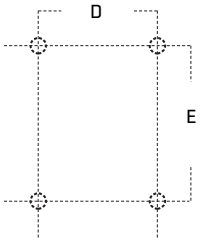

Model	A	B	C	D	E	Net kg	Gross kg	Enclosure
TDDSD2.5A	300	325	175	255	255	13.7	14	Steel
TDDSD4A	300	425	225	255	355	20.8	21.1	Steel
TDDSD8A	400	425	225	355	355	30.7	31	Steel
TDDSD11A	400	430	235	355	355	37.6	38	Steel

COMPATIBILITY

Speed controller for three phase voltage controllable motors.

MOUNTING

Break (Isolate) mains voltage. Ensure that this controller is mounted on a smooth flat surface. Connect voltage supply, motor(s) and earth as shown in the scheme with cables of the proper diameter.

ISOLATION AND WIRING (SEE DIAGRAM ON PREVIOUS PAGE)

A safety isolator/disconnect switch should be installed on the mains electricity side of all motor drives; Please refer to SISO product.

TRANSPORT AND STOCK KEEPING

Avoid shocks. Stock in original packing. Avoid extreme conditions.

WARRANTY

Any modifications or alterations to the product relieve the manufacturer of all responsibility. The manufacturer bears no responsibility for any misprints or mistakes in this data, and modifications or improvements to the product can be made at any time after date of publication.

MAINTENANCE

In normal conditions our controllers are maintenance-free. If external surfaces requires light cleaning, please use a dry or slightly damp cloth. If heavy cleaning is needed, then we recommend the use of a non-aggressive cleaning product. Particular attention should be paid to ensure that no fluids enter the controller. Only reconnect the controller to the mains electrical supply when it is completely dry.

MOTOR PROTECTION

The controller has contacts for motors with thermostat (Tk) overheat protection (NC-contact). When motor overheating (or a power failure) is detected the controller stops power to the motor. The red indicator light and alarm output will signal this error condition. (Reset: main switch to off position and back).

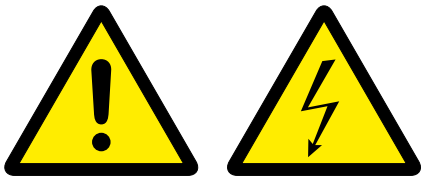

General danger Electrical hazard

All works may only be carried out by skilled personnel following the local regulations and AFTER the controller is completely isolated from the mains.

ENVIRONMENT
ECONOMICAL
EXPERTISE

TDDP – TRANSFORMER THREE PHASE

DEMAND PROPORTIONAL DRIVE

DESCRIPTION

Our TDDP transformer speed controllers are based on the principle of voltage control using auto-transformers. They are applicable to three phase voltage-controllable motors (400 V, 50/60 Hz) to control the rotational speed of fans.

By combining the transformer outputs, contactors and a relay board, it is possible to select these predetermined speeds using a 0-10 VDC signal, which can, for example, be provided from an external source or via our Room Potentiometers (models SDPV10 or SDPV230).

They are fitted with thermostat (Tk) contacts for motor protection and BMS enable/disable facilities.

OPTIONAL ACCESSORIES

- PIR
- Temp Sensor
- CO_2 Sensor
- Pressure Sensor
- 0-10 V pot - (230 volt)

RANGE

To ensure correct drive selection, please choose a drive that has an amp rating that is equal to or above the fan motor full load current (FLC).

Model	TDDP2.5A	TDDP4A	TDDP8A	TDDP11A
Part	EA900037	EA900038	EA900039	EA900040
Lmax (A)	2.5	4	8	11
IP Rate	IP54	IP54	IP54	IP54

SPEED SELECTION AND WIRING DIAGRAMS

Speed goes up at: 2, 4, 6, 8, 9.5 VDC

Speed goes down at: 1.8, 3.8, 5.8, 7.8, 9.3 VDC

R S T - power supply 400 VAC- 50/60 Hz

L1 N - unregulated output 230 VAC (max 2 A)

U V W - motor connection

TK - input thermal contacts of the motor

0V - GND

+12V - output 12 VDC/Imax = 50 mA* * The sum of the current for both outputs (+12V and +V)

may not be greater than 100 mA

+V - digital output 12 VDC/Imax = 50 mA*

0 V = TK fault

12 V = normal operation

V/C input U: 0-10 VDC

Pe earth connections x3

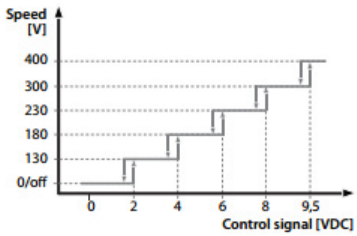

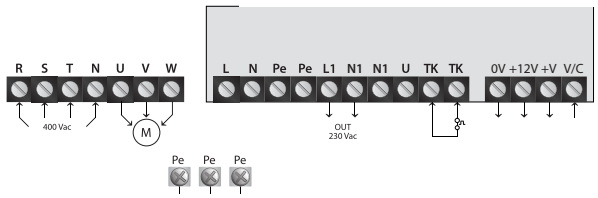

DIMENSIONS AND WEIGHTS

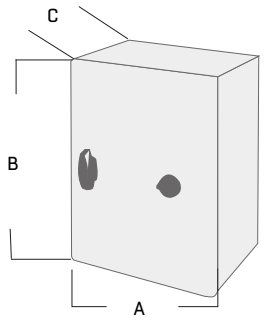

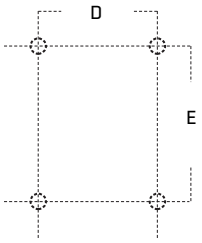

Model	A	B	C	D	E	Net kg	Gross kg	Enclosure
TDDP2.5A	300	425	170	255	355	17	17.5	Steel
TDDP4A	400	425	200	355	355	20	20.5	Steel
TDDP8A	400	425	200	355	355	27	27.5	Steel
TDDP11A	400	425	200	355	355	30	30.5	Steel

COMPATIBILITY

Speed controller for three phase voltage controllable motors.

ISOLATION AND WIRING (SEE DIAGRAM ON PREVIOUS PAGE)

When TK-TK not used: Connect TK-TK

A safety isolator/disconnect switch should be installed on the mains electricity side of all motor drives; Please refer to SISO product.

MOUNTING

Break (Isolate) mains voltage. Ensure that this controller is mounted on a smooth flat surface. Connect voltage supply, motor(s) and earth as shown in the scheme with cables of the proper diameter and in accordance with local regulations.

TRANSPORT AND STOCK KEEPING

Avoid shocks and extreme conditions, stock in original packing.

WARRANTY

Any modifications or alterations to the product relieve the manufacturer of all responsibility. The manufacturer bears no responsibility for any misprints or mistakes in this data, and modifications or improvements to the product can be made at any time after date of publication.

MAINTENANCE

In normal conditions our controllers are maintenance-free. If external surfaces requires light cleaning, please use a dry or slightly damp cloth. If heavy cleaning is needed, then we recommend the use of a non-aggressive cleaning product. Particular attention should be paid to ensure that no fluids enter the controller. Only reconnect the controller to the mains electrical supply when it is completely dry.

MOTOR PROTECTION

In built motor overheat protection via motor thermostats (Tk). When these contacts open because of motor overheating, this circuit is broken and the controller stops power to the motor. There is NO automatic restart for safety reasons. After elimination of the cause of the overheating, restart by putting the switch in Off-position for a few moments.

General danger

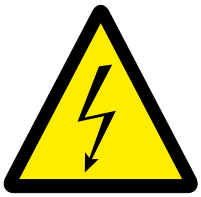

Electrical hazard

All works may only be carried out by skilled personnel following the local regulations and AFTER the controller is completely isolated from the mains.

IFAN - INTELLIGENT FAN CONTROLLER

ENVIRONMENT
ECONOMICAL
EXPERTISE

FEATURES

- In-built 24V electrical supply for sensors
- Indicates fan run, fault and service requirements
- Can be integrated with a Building Management System (BMS)
- Varies fan performance in response to input signals
- Provides ventilation from maximum to trickle to stop
- Duty sharing and auto changeover facility
- Indicates total running time, to assist servicing

DESCRIPTION

Advanced ventilation control providing improved energy efficient indoor air quality, increase comfort levels and productivity.

Acts as a stand alone solution, but can also be integrated into a BMS solution.

Gives full control of run, standby and changeover functions. Gives fan speed control from full speed, though trickle, to start/stop via a range of switches and sensors (0>10v) using pre-set and customer set parameters.

Includes control outputs to allow speed control of EC motors or control of AC motors via built in inverter output (0 to 10v signal).

In built keyboard and LCD display for easy set up and integration of unit conditions. Visual display of fan faults, service, speeds and controls.

Monitors and controls ventilation via PIR , temperature, CO_2, pressure or flow sensors. Also allows inputs from BMS/Remote devices (0 to 10v signals).

The intelligent control unit has a LCD display that assists with the set up and enables monitoring of the system operation, showing diagnostic display, running times, fan speeds, fault indication, service intervals, damper or valve operation, temperature, humidty and CO_2 levels.

IFAN BENEFITS

Improved Environment

iFan advanced ventilation control maintains improved indoor air quality, improved productivity and comfort quality.

Energy Saving

The iFan, demand controlled solution, reduces ventilation running costs, energy consumption, maintenance and noise.

Intelligent Fan Systems

Increased Safety

Our iFan control system uses low voltage SELV (Safety Extra Low Voltage) devices to improve safety for installers and users.

Simplified Installation

Each iFan sensor or switch is supplied with 10m of cable, a flexible gland terminated with a plug, which simplifies and reduces installation time and cost.

Single Source

As our iFan product includes integral controls, we can provide ventilation and control support from a single source, making the installation process easier for our customers.

Diagnostic Display

The ICU has a LED screen to display all necessary values for setup, operation and maintenance.

Scope

Our iFan system allows us to offers a full range of box fans with integral intelligent control, supported by a range of switches, sensors, fittings and cabling to enable easy installation.

Range

Model	iFan
Part Number	**430743**
IP Rating	IP54
Fuse	6
Electrical Supply	1 ϕ

OVERVIEW

Our IFan stand alone controller includes an interface which allows the operation mode to be changed or the operation status to be viewed. The interface can also be used to set parameters and read key operational values to assist with fault diagnosis.

INSTALLATION

Our intelligent fan system consists of the following elements:

- Fan unit
- Intelligent control module
- Sensors, switches and heaters (ancillaries) if purchased with IFan
- Manual (ancillaries have their own datasheets)

GENERAL

During normal operation, the IFan cover should not be opened.

If the cover needs to be opened, this should only be carried out by a qualified electrician or trained maintenance person, who are aware of safety regulations related to low voltage installations (including 240V AC inside box, sensors 24V).

Care should always be take when installing and connecting electrical devices, as there is always a risk of electrical shock, if safe working practices are not followed. When connecting wiring to, or servicing, the IFan unit and associated devices, the electrical supply mustbe switched off and isolated for our product.

UNPACKING

Check that all equipment ordered has been delivered. Check visually that all equipment is undamaged.

OPTIONAL ACCESSORIES

- PIR
- Temp Sensor
- CO_2 Sensor
- Pressure Sensor
- 0-10 V pot - (230 volt)

OPERATION OPTIONS

Our iFan is suitable for operating a number of different fan configurations.

These include:

- Twin exhaust fans
- Single exhaust fans
- Single supply fans without heater
- Single supply fans with heater

As our IFan is supplied unconfigured (No Application), the desired configuration must be set-up during the commissioning process.

COMPATIBILITY

Please refer to the specific instructions & software supplied with each drive.

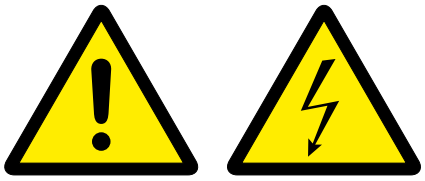

General danger Electrical hazard

All works may only be carried out by skilled personnel following the local regulations, reference to the installation guide and AFTER the controller is completely isolated from the mains.

LED DISPLAY CONTROLS

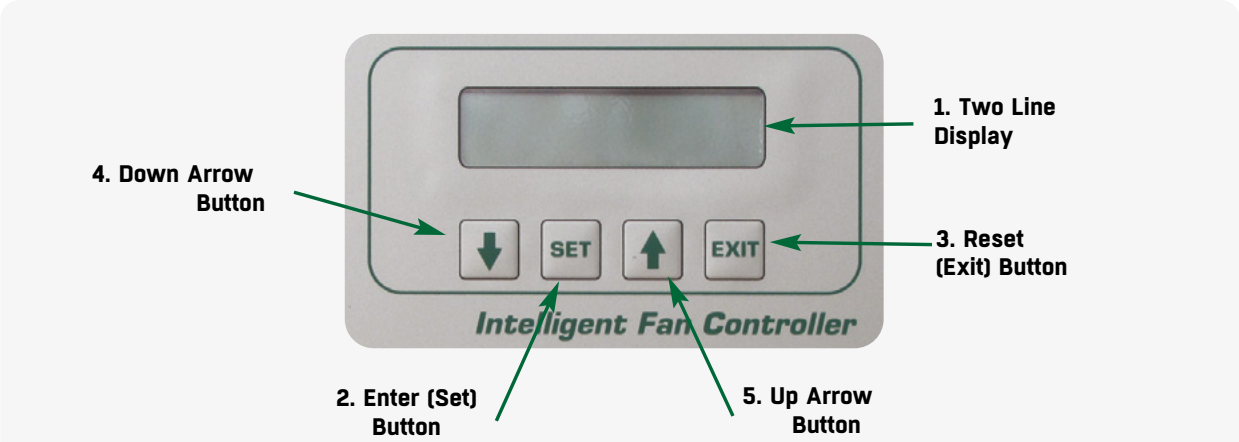

IDDXF54 – HVAC INVERTER THREE PHASE IP54

DEMAND INDEPENDENT, SWITCHED AND PROPORTIONAL DRIVE – FOR AXIAL AND CENTRIFUGAL FANS

ENVIRONMENT
ECONOMICAL
EXPERTISE

FEATURES

- 400V, 2.2-177A, 0.75-90kW 3 Ph
- Designed for HVAC applications i.e. Fire mode, Flying Start...
- Enclosures IP54 (see IDDXF66 for IP66)
- Asynch and PM motor control. Max shielded cable length 25m
- Simple installation wizard.
- Alpha-numeric display
- In built motor overheat protection via motor thermistors
- EMC A1/C2 integrated filters and DC choke for harmonic mitigation
- 4xDI, 2xAI, 1xAO/DO and 2xRO / RS485. Modbus RTU, N2, FLN and BACnet
- Maximum ambient 50°C

OPTIONAL ACCESSORIES

- PIR
- Temp Sensor
- CO_2 Sensor
- Pressure Sensor
- 0-10 V pot - (10 volt)

DESCRIPTION

Designed specifically for three phase fan applications our IDDXF Frequency converters control speed, torque, and the overall performance of AC and PM motors by controlling the power input. Independent, Switched and Proportional demand control from the included digital, and HVAC protocols ensures maximum efficiency and comfort to the level required.

A safety isolator/switch disconnector should be installed on the mains side of all motor drives; refer to SISO.

RANGE

Model	Ph.	V	IP	Amps	kW	FWG Part	Enc.
IDDXF-54-2.2	**3-3**	**400V**	**54**	**2.2**	**0.75**	**EA901016**	**I2**
IDDXF-54-3.7	**3-3**	**400V**	**54**	**3.7**	**1.5**	**EA901017**	**I2**
IDDXF-54-5.3	**3-3**	**400V**	**54**	**5.3**	**2.2**	**EA901018**	**I2**
IDDXF-54-7.2	**3-3**	**400V**	**54**	**7.2**	**3.0**	**EA901019**	**I2**
IDDXF-54-9	**3-3**	**400V**	**54**	**9**	**4.0**	**EA901020**	**I2**
IDDXF-54-12	**3-3**	**400V**	**54**	**12**	**5.5**	**EA901021**	**I3**
IDDXF-54-15.5	**3-3**	**400V**	**54**	**15.5**	**7.5**	**EA901022**	**I3**
IDDXF-54-23	**3-3**	**400V**	**54**	**23**	**11.0**	**EA901023**	**I4**
IDDXF-54-31	**3-3**	**400V**	**54**	**31**	**15.0**	**EA901024**	**I4**
IDDXF-54-37	**3-3**	**400V**	**54**	**37**	**18.5**	**EA901025**	**I4**
IDDXF-54-42.5	**3-3**	**400V**	**54**	**42.5**	**22.0**	**EA901026**	**I6**
IDDXF-54-61	**3-3**	**400V**	**54**	**61**	**30.0**	**EA901027**	**I6**
IDDXF-54-73	**3-3**	**400V**	**54**	**73**	**37.0**	**EA901028**	**I6**
IDDXF-54-90	**3-3**	**400V**	**54**	**90**	**45.0**	**EA901029**	**I7**
IDDXF-54-106	3-3	400V	54	106	55.0	EA901069	I7
IDDXF-54-147	3-3	400V	54	147	75.0	EA901070	I8
IDDXF-54-177	3-3	400V	54	177	90.0	EA901071	I8

Please note:
If running in hand (manual) mode a external link is required between 12 and 27. If running in auto mode a external link is required between 12 and 18.

Description	FWG Part
Local Control Panel	EA901031
Local Control Panel mounting kit inc. 3m cable	EA901032
Decoupling plate H1 & H2	EA901033
Decoupling plate H3	EA901034
Decoupling plate H4 & H5	EA901035
IP21 option H1	EA901036
IP21 option H2	EA901037
IP21 option H3	EA901038
IP21 option H4	EA901039
IP21 option H5	EA901040

COMPATIBILITY

Please refer to the specific instructions & software supplied with each drive.

General danger

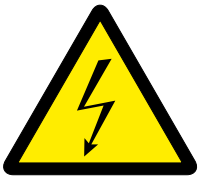

Electrical hazard

All works may only be carried out by skilled personnel following the local regulations, reference to the installation guide and AFTER the controller is completely isolated from the mains.

DIMENSIONS AND WEIGHTS

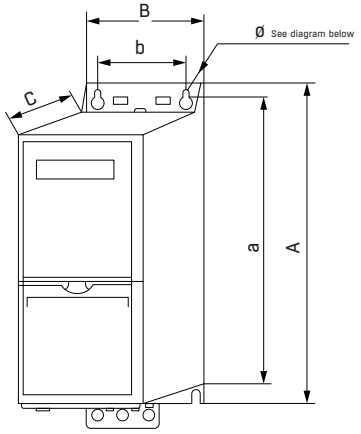

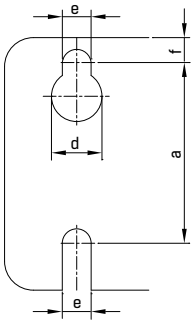

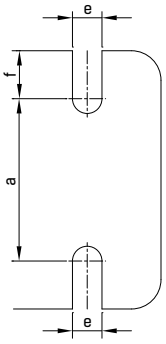

Enclosure		Power [kW]			Height [mm]	Width [mm]		Depth [mm]	Mounting hole [mm]			Max Weight
Frame	IP Class	3x 380-480 V	A	"A incl Decoupling Plate"	a	B	b	C	d	e	f	kg
I2	IP54	0.75-4.0	332	-	318.5	115	74	225	11	5.5	9	5.3
I3	IP54	5.5-7.5	368	-	354	135	89	237	12	6.5	9.5	7.2
I4	IP54	11-18.5	476	-	460	180	133	290	12	6.5	9.5	13.8
I5	IP54	11-18.5	480	-	454	242	210	260	19	9	9	23
I6	IP54	22-37	650	-	624	242	210	260	19	9	9	27
I7	IP54	45-55	680	-	648	308	272	310	19	9	9.8	45
I8	IP54	75-90	770	-	739	370	334	335	19	9	9.8	65

WIRING DIAGRAM

1 - Line

2 - Earth

3 - Motor

4 - Relay

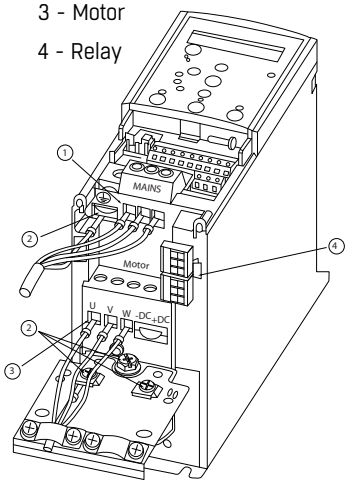

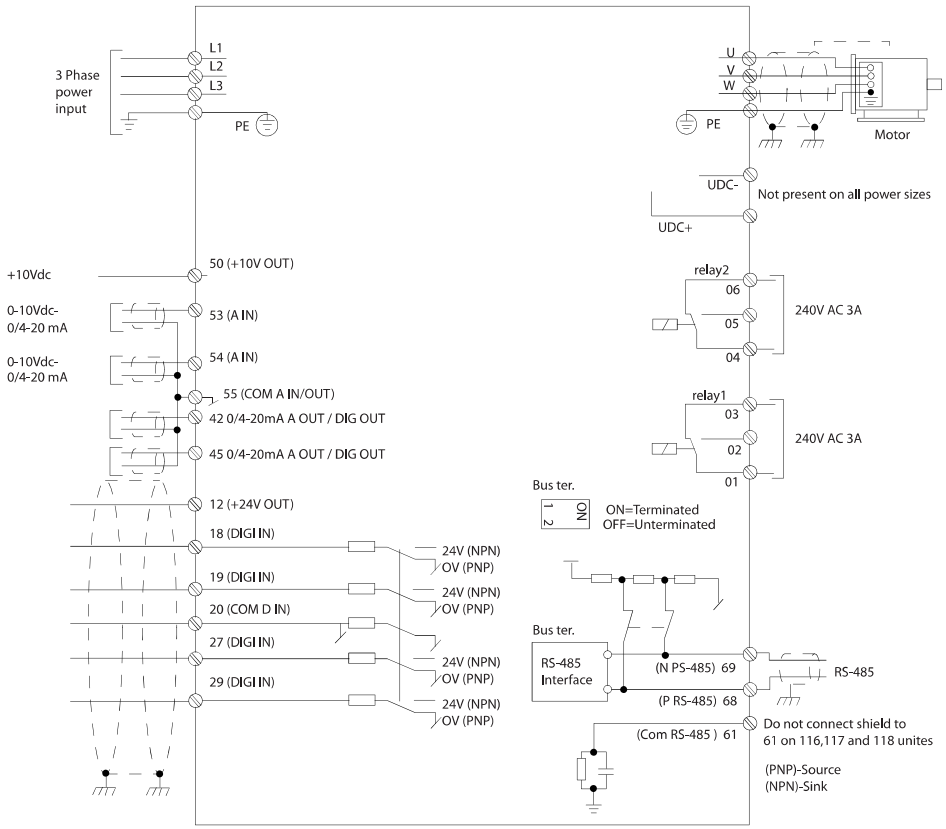

ENVIRONMENT
ECONOMICAL
EXPERTISE

IDDXF66 – HVAC INVERTER THREE PHASE IP66

DEMAND INDEPENDENT, SWITCHED AND PROPORTIONAL DRIVE – FOR AXIAL AND CENTRIFUGAL FANS

FEATURES

- 400V, 3.0-106A, 1.1-55kW 3 Ph
- Designed for HVAC applications i.e. Fire mode, Flying Start...
- Enclosures IP66 ingress protection
- Max shielded cable length 25m
- Asynch & PM motor control
- Simple installation wizard
- Ultra compact
- Alpha-numeric display
- In built motor overheat protection via motor thermistors
- LCP Remote mounting kit with 3m cable available
- Connectable to all major HVAC protocols Modbus RTU, N2, FLN and BACnet
- EMC A1/C2 integrated filters and DC choke for harmonic mitigation
- 4xDI, 2xAI, 1xAO/DO and 2xRO / RS485
- BMS enable/disable
- Fully programmable set points via display and included software
- Maximum ambient 50°C
- High energy efficiency

DESCRIPTION

Designed specifically for three phase fan applications our IDDXF Frequency converters control speed, torque, and the overall performance of AC and PM motors by controlling the power input.

Independent, Switched and Proportional demand control from the included digital, and HVAC protocols ensures maximum efficiency and comfort to the level required.

A safety isolator/switch disconnector should be installed on the mains side of all motor drives; refer to SISO.

OPTIONAL ACCESSORIES

- PIR
- Temp Sensor
- CO_2 Sensor
- Pressure Sensor
- 0-10 V pot

RANGE

Model	Ph.	V	IP	Amps	kW	FWG Part	Enc.
IDDXF-66-3	3-3	400V	66	3	1.1	EA901072	A4
IDDXF-66-4.1	3-3	400V	66	4.1	1.5	EA901073	A4
IDDXF-66-5.6	3-3	400V	66	5.6	2.2	EA901074	A4
IDDXF-66-7.2	3-3	400V	66	7.2	3	EA901075	A4
IDDXF-66-9	3-3	400V	66	9	4	EA901076	A4
IDDXF-66-12	3-3	400V	66	12	5.5	EA901077	A5
IDDXF-66-15.5	3-3	400V	66	15.5	7.5	EA901078	A5
IDDXF-66-23	3-3	400V	66	23	11	EA901079	B1
IDDXF-66-31	3-3	400V	66	31	15	EA901080	B1
IDDXF-66-37	3-3	400V	66	37	18.5	EA901081	B1
IDDXF-66-42.5	3-3	400V	66	42.5	22	EA901082	B2
IDDXF-66-61	3-3	400V	66	61	30	EA901083	B2
IDDXF-66-73	3-3	400V	66	73	37	EA901084	C1
IDDXF-66-90	3-3	400V	66	90	45	EA901085	C1
IDDXF-66-106	3-3	400V	66	106	55	EA901086	C1

WIRING DIAGRAM

For detail please refer to the specific diagrams supplied with each drive.

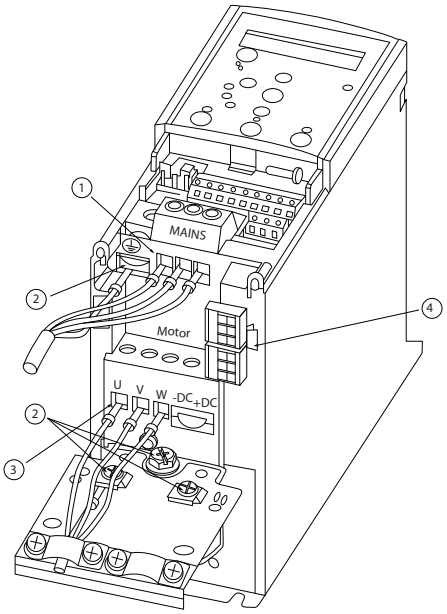

1 - Line
2 - Earth
3 - Motor
4 - Relay

DIMENSIONS AND WEIGHTS

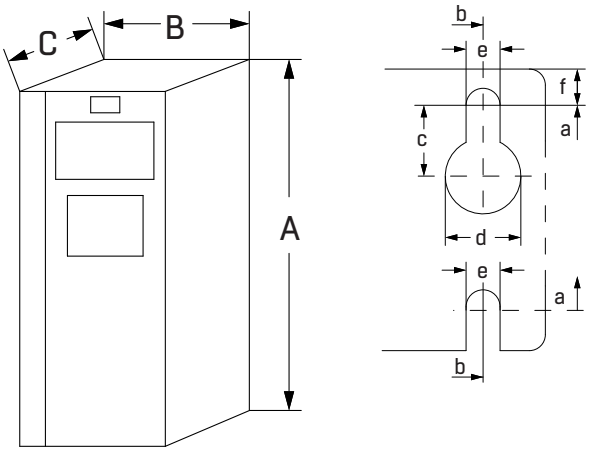

Frame size (kW)	Dimensions	A4	A5	B1	B2	C1
380-480V		1.1-40	1.1-7.5	11-18.5	22-30	37-55
IP		/66	/66	/66	/66	/66
Height (mm)						
Enclosure		390	420	480	650	680
Back plate	A1	390	420	480	650	680
Distance between mount. Holes	a	401	402	454	624	648
Width (mm)						
Enclosure	B	200	242	242	242	308
With one C option	B		242	242	242	308
Back plate	B	200	242	242	242	308
Distance between mount. Holes	b	171	215	210	210	272
Depth (mm)						
Without option A/B	C	175	200	260	260	310
With option A/B	C*	175	200	260	260	310
Screw holes (mm)						
	c	8.2	8.2	12	12	12
Diameter ø	d	12	12	19	19	19
Diameter ø	e	6.5	6.5	9	9	9
	f	6	9	9	9	9.8
Max Weight (kg)		9.7	14	23	27	45

*Depth of enclosure will vary with different options installed.

COMPATIBILITY

Please refer to the specific instructions and software supplied with each drive.

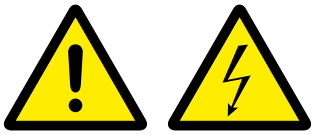

General danger Electrical hazard

All works may only be carried out by skilled personnel following the local regulations, reference to the installation guide and AFTER the controller is completely isolated from the mains.

WIRING DIAGRAM

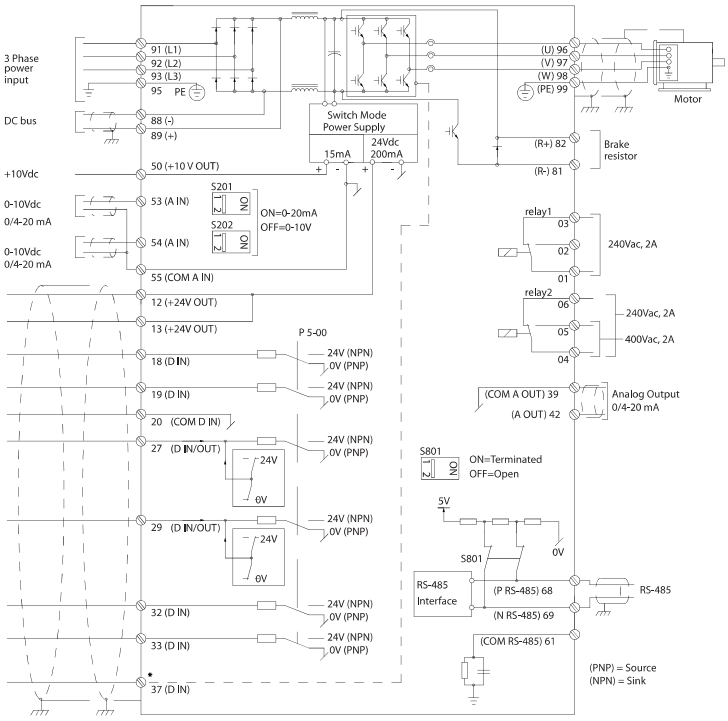

ENVIRONMENT
ECONOMICAL
EXPERTISE

SWITCHES & SENSORS

SISO – SAFETY ISOLATORS/SWITCH-DISCONNECTORS

FEATURES

- Electrical range 230V-690V, 1-3phase, 50-60Hz, 0-63A
- Enclosure IP66 Grey RAL 7035
- Mechanically interlocked with 3xPadlock to 'Off' apertures
- Early breaker fitted to all units as standard. Three and Six pole/ wire versions available
- Three and six pole/wire versions available
- Two entries top and bottom 20/25A M20 40/63A M20/25
- Stainless steel facia screws
- Two earth continuity screws in each enclosure

DESCRIPTION

All fans and drives should have a correctly rated lockable isolation switch installed in the power input circuit to provide full electrical isolation. This is vital for safe installation, operation and maintenance.

Many modern drives also require an early break signal so that a graceful full power off can be achieved without damage to sensitive electronics. Early break is included in all SISO Isolators. Isolators are provided with mechanically interlocked IP66 as standard.

Auxiliary Contacts			
Rated insulation		V	690
Rated thermal current		A	10
Operational current	100V	A	8
	220-240V	A	8
	380-400V	A	3
	660-690V	A	1
Max. conductor size		mm²	1.5
Tightening torque		Nm	0.6

RANGE

Model	Description	Part
SISO25-3	**Isolator 3P 25A+2EB**	**EA002000**
SISO40-3	Isolator 3P 40A+2EB	EA002001
SISO63-3	Isolator 3P 63A+2EB	EA002002
SISO25-6	Isolator 6P+2EB 25A	EA002003
SISO40-6	Isolator 6P+2EB 40A	EA002004

Attribute	Unit	SISO25-3	SISO40-3	SISO63-3	SISO20-6	SISO40-6
Rated thermal current	A	25	40	63	20	40
Rated insulation voltage	V	690	690	690	690	690
Rated impulse voltage	kV	6.0	6.0	6.0	6.0	6.0
Rated operational power (3 phase AC)	kW	11.0	15.0	25.0	7.5	15.0
Rated short withstand current (1 sec)	A	500	600	1300	250	800
Terminal type						
Flexible cable	mm²	6.0	6.0	16.0	2.5x2	6.0x2
Rigid cable	mm²	10.0	10.0	25.0	2.5x2	10.0x2
Tightening torque	Nm	1.2	1.2	1.2	1.0	1.0

WIRING DIAGRAM

0 - I (90 ° indexing)

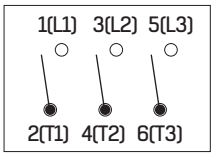

2 & 3 Pole

0 - I (90 ° indexing)

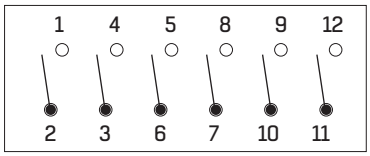

6 Pole

DIMENSIONS AND WEIGHTS

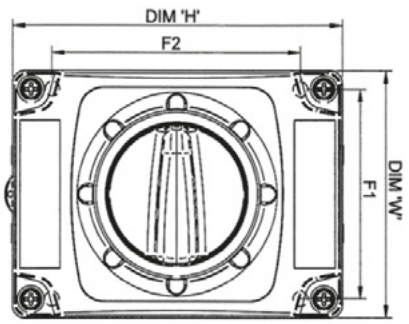

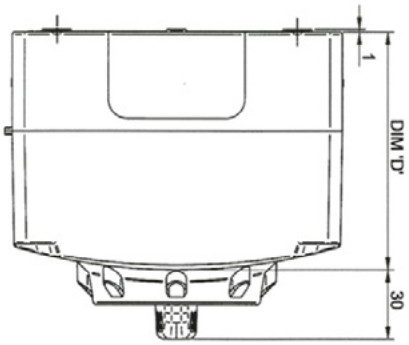

Amps	H (mm)	W (mm)	D (mm)	F1 (mm)	F2 (mm)	Ø (mm)
20/25A	135	100	95	85	98.5	5.5
40/63A	175	130	115	115	135	5.5

COMPATIBILITY

This product when installed, commissioned and maintained by or under the supervision of a competent electrician in accordance with current electrical engineering codes of practice and regional laws.

It is essential that the power supply is disconnected prior to installation.

To maintain the IP rating to the product it is important to adhere to the following.

- Use only the existing mounting holes
- Use cable glands and sealing washers designed to maintain the rating
- Tighten lid screws to 1.2Nm
- The unit designed to be mounted vertically.

Ensure that the correct cross section of cable and terminators are used as the table referenced above.

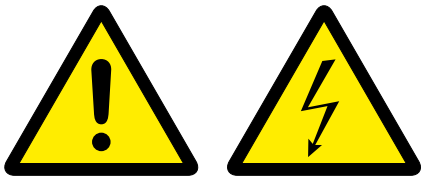

General danger Electrical hazard

All works may only be carried out by skilled personnel following the local regulations, reference to the installation guide and AFTER the controller is completely isolated from the mains.

ENVIRONMENT
ECONOMICAL
EXPERTISE

SDXT – ROOM TEMPERATURE SENSOR/SWITCH CONTROLLER

FOR DEMAND PROPORTIONAL AND SWITCHED DRIVES
FEATURES

- Supply voltage: 18-32 VDC ±10 %/15-24 Vac ±10 %
- Low profile housing with covered screws
- Terminal blocks with 0.75 mm2 connectors
- Measurement range -0 +40°C
- Accuracy: ±0.5°C
- Short reaction times: less than 2 sec. in air
- LED operating indication
- Enclosure: plastic ABS, V0, RAL9010 ivory
- Protection class: IP30
- Power consumption: up to 60 mA
- Sensor element: platinum temperature sensor PT500
- Analogue output 0-10 Vdc/0-20 mA
- Digital relay output
- Modbus RTU on board
- Downloadable set-up software

DESCRIPTION

These room temperature sensors provide precision sensing, compatible with all leading control systems. They are
designed to provide fast response to changes in thermal comfort conditions. Each unit is equipped with a platinum sensor and has a 0-10 Vdc/0-20 mA analogue output and relay digital signal.

They include on board Modbus RTU and although pre-set for normal operations can be site set via downloadable software.

RANGE

Model	Description	Part
SDXT	**Room Temperature Sensor/Switch controller with Modbus RTU**	**EA002100**

WIRING DIAGRAM

A - RS485 signal A

/B - RS485 signal /B

GND - ground

AO1 - analogue output

GND - ground

+V 15-24 VAC ±10 %/18-34 VDC ±10 %

GND - ground

NC1 - relay output - normally closed (230 VAC/2 A)

COM1 - relay output - common (230 VAC/2 A)

NO1 - relay output - normally open (230 VAC/2 A

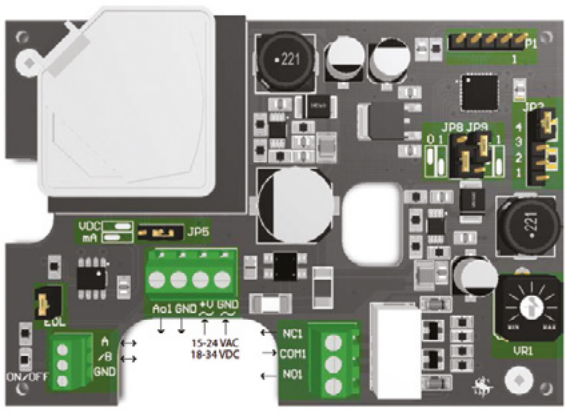

DIMENSIONS AND WEIGHTS

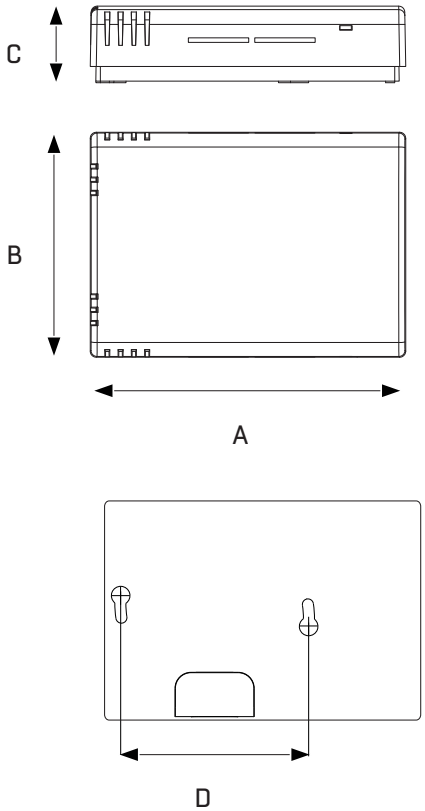

Amps	A (mm)	B (mm)	C (mm)	D (mm)	Net (g)	Grosst (g)
SDXT	105	75	26	60	110	120

TECHNICAL DATA

Supply voltage: 18-32 VDC ±10 %/15-24 VAC ±10 %

Operating temperature range: -10...50°C

Relay output: 230 VAC/2 A

Enclosure: plastic ABS, V0, RAL9010 ivory,

Ingress Protection: IP30

MOUNTING

The device is to be mounted in a room on a smooth surface, preferably at a minimum height of 1.50 m above the floor.

TRANSPORT AND STOCK KEEPING

Avoid shocks. Stock in original packing. Avoid extreme conditions.

WARRANTY

Any modifications or alterations to the product relieve the manufacturer of all responsibility. The manufacturer bears no responsibility for any misprints or mistakes in this data, and modifications or improvements to the product can be made at any time after date of publication.

MAINTENANCE

In normal conditions our controllers are maintenance-free. If external surfaces requires light cleaning, please use a dry or slightly damp cloth. If heavy cleaning is needed, then we recommend the use of a non-aggressive cleaning product. Particular attention should be paid to ensure that no fluids enter the controller. Only reconnect the controller to the mains electrical supply when it is completely dry.

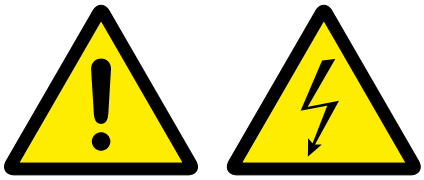

General danger Electrical hazard

All works may only be carried out by skilled personnel following the local regulations, reference to the installation guide and AFTER the controller is completely isolated from the mains.

SDXC – ROOM CO_2 SENSOR/SWITCH CONTROLLER

FOR DEMAND PROPORTIONAL AND SWITCHED DRIVES

ENVIRONMENT
ECONOMICAL
EXPERTISE

FEATURES

- Supply voltage: 15-24VAC or 18-34VDC
- Microcontroller based design increases accuracy and reduces installation time
- Modbus RTU (RS485)
- Software for configuration
- IP30 Ingress protection
- LED operation indication
- Excellent long term stability with NDIR CO_2 sensor
- Innovative self-calibrating algorithm
- Sensor and switch combined
- C/O relay output
- Analogue output: 0-10 VDC/0-20 mA
- Different CO_2 ranges selectable by jumper or via Modbus
- Setpoint selectable by trimmer
- Operating conditions: -10 to 50°C and 0-95 % RH

DESCRIPTION

These CO_2 sensor/switches provide a stable, secure environment with high energy performance.

The concentration of CO_2 in the air is measured (with four predefined ranges or a user-definable range), using a self-calibrated and maintenance-free sensor with NDIR technology.

The SDXC is fully configurable via Modbus RTU RS485 communications and is compatible with most building management systems. Although pre-set, software is made freely available for after sales configuration.

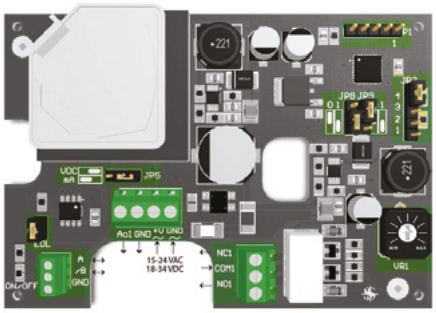

RANGE

Model	Description	Part
SDXC	**Room CO_2 Sensor/Switch controller with Modbus RTU**	**EA002101**

WIRING DIAGRAM

A - RS485 signal A

/B - RS485 signal /B

GND - ground

AO1 - analogue output

GND - ground

+V 15-24 VAC ±10 %/18-34 VDC ±10 %

GND - ground

NC1 - relay output - normally closed (230 VAC/2 A)

COM1 - relay output - common (230 VAC/2 A)

NO1 - relay output - normally open (230 VAC/2 A)

SETTINGS

Jumper reset Modbus settings

J1	
1	Put and hold the jumper on position 1 for 20 sec

Jumper analog output

JP5	Output
	0-10 VDC
	0-20 mA

Jumper hysteresis value

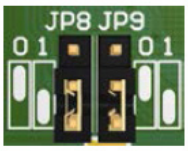

JP8 JP9	Hysteresis
	25 ppm
	50 ppm
	75 ppm
	100 ppm

Jumper Sensor Range

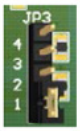

1 2 3 4 5	Sensor range
■■□□□	0–2.000 ppm
□■■□□	0–1.500 ppm
□□■■□	0–1.000 ppm
□□□■■	450–1.850 ppm

Jumper Network Bus Termination Resistor

EOL	Resistor
■	connected
□	disconnected

Trimmer Setpoint

MIN: minimum of the sensor range
MAX: maximum of the sensor range

SETTINGS

Operation Graph

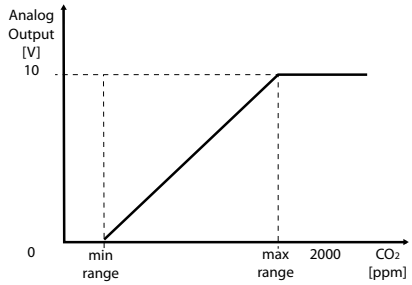

The output voltage starts to rise from 0 VDC at minimum sensor range and reaches 10 VDC at maximum sensor range.

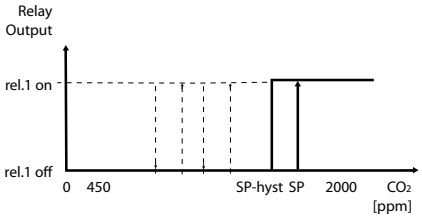

The relay switches on at an adjusted setpoint by trimmer and switches off again with an adjusted hysteresis selected by jumpers.

INPUT REGISTERS (READ)

		Data Type	Description	Data	Values
1			Reserved, returns 0		
2			Reserved, returns 0		
3			Reserved, returns 0		
4	CO_2 ppm	unsigned int.	Actual CO_2, level		2.000=2.000 ppm
5			Reserved, returns 0		
6			Reserved, returns 0		
7			Reserved, returns 0		
8			Reserved, returns 0		
9			Reserved, returns 0		
10			Reserved, returns 0		
11	Analog output	signed int.	Actual analog output value	0-1.000	0=0 VDC 1.000=10,00 VDC
12	Relay status	signed int.	Actual status of relay	0 1	0 = off 1 = on
13	CO_2 range	signed int.	Actual CO_2, range active selected by jumper holding register		1 (450-1850 ppm) 2 (0-1.000 ppm) 3 (0-1.500 ppm) 4 (0-2.000 ppm)
14	CO_2 set point	signed int.	Actual CO_2, setpoint active set-point selected by trimmer or holding register		2.000=2.000 ppm
15	Hysteresis	signed int.	Hystersis for relay, selectable by jumpers	25 50 75 100	50=50ppm
16	Setpoint our of range flag	signed int.	Flagt that shows when setpoint is out of sensor range	0=OK 1 = setpoint out of range	0-1
17	Calibration timer	unsigned int.	Returns passed in % for 10 min calibration precedure in progress, if in active returns 0	0-100	0-100%
18			Reserved, returns 0		
19			Reserved, returns 0		
20			Reserved, returns 0		

HOLDING REGISTERS (READ/WRITE)

		Data Type	Description	Data	Values
1	Device address	unsigned int.	Device address	1-247 (default:1)	
2	RS485 baud rate	unsigned int.	Modbus communication baud rate	1-9.600 2=19.200 (default) 3=38.400 4=57.600	
3	RS485 parity mode	unsigned int.	Parity check mode	0=8N1 1=8E1 2=8O1 (default)	
4	Device type	unsigned int.	Device type, read-only	RXC-G=2	
5	HW Version	signed int.	Hardware version of the device, read-only	223-275X	300 = HW version 3.00
6	SW Version	signed int.	Software version of the device, read-only	223-275X	130 = SW version 1.30
7	Modbus Control	signed int.	Enables Modbus control and disables jumpers and trimmers	0=disable 1=enable	
8	Modbus direct control	signed int.	Enables direct control over outputs	0=disable 1=enable	
9			Reserved, returns 0		
10			Reserved, returns 0		
11	CO_2 range	signed int.	CO_2 rnage selection	1 (default) 2 3 4 5	1 (450-1850 ppm) 2 (0-1.000 ppm) 3 (0-1.500 ppm) 4 (0-2.000 ppm) 5 custom
12	CO_2 custom range min	signed int.	CO_2 custom range min	0-max (default:0)	1.000 = 1.000 ppm
13	CO_2 custom range max	signed int.	CO_2 custom range max	min - 2.000 (default:2.000)	2.000 = 2.000 ppm
14	CO_2 setpoint	signed int.	Setpoint for CO_2 relay		2.000 = 2.000 ppm
15	10 minute calibration	signed int.	Setting this to 1 will perform 10 minute calibration and will automatically be cleared after calibration, the sensor measures CO_2 level for 10 min. and sets the lowest value at 400ppm (do not switch off during this procedure!).	0 (default) 1	1 = 10 min. calibration active
16	1 month calibration	signed int.	Setting this to 1 will turn on 1 month calibration and is not autmatically cleared after the calibration, the sensor measures CO_2 level for 1 month and sets the lowest value at 400 ppm (do not switch off during this procedure!)	0 (default) 1	1 = 1 month calibration active
17			Reserved, returns 0		
18			Reserved, returns 0		
19			Reserved, returns 0		
20			Reserved, returns 0		
21	Analog output overide	signed int.	Override value, active only if registers 7 and 8 are set to '1'	0-1.000 (de-fault:0)	0=0.00 VDC 1.000=10.00 VDC
22			Reserved, returns 0		
23			Reserved, returns 0		
24			Reserved, returns 0		
25			Reserved, returns 0		
26			Reserved, returns 0		
27			Reserved, returns 0		
28			Reserved, returns 0		
29			Reserved, returns 0		
30			Reserved, returns 0		

COILS (READ/WRITE)

	Data Type	Description
1 - Relay 1	bit	Available only if holding registers 7 and 8 and set to '1'

DIMENSIONS AND WEIGHTS

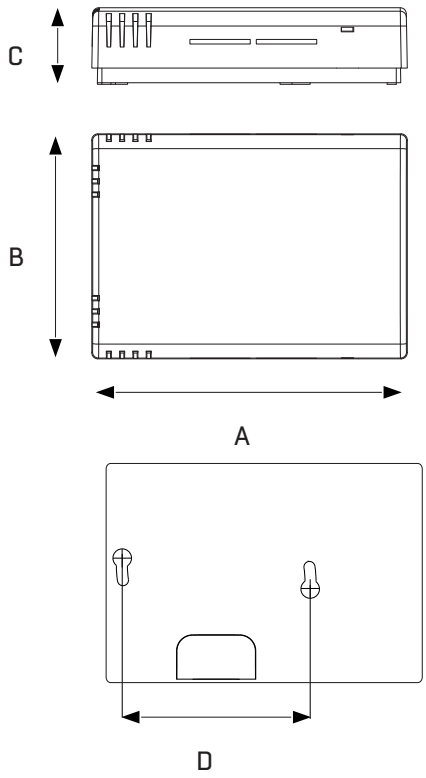

Model	A (mm)	B (mm)	C (mm)	D (mm)	Net (g)	Gross (g)
SDXC	105	75	26	60	110	120

TECHNICAL DATA

Supply voltage: 18-32 VDC ±10 %/15-24 VAC ±10 %

Power consumption normal: up to 75 mA, peak: 400 mA for 10 ms per 3 sec period

Accuracy: ±50 ppm

Operating temperature range: -10...50°C

Relay output: 230 VAC/2 A

Enclosure: plastic ABS, V0, RAL9010 ivory,

Ingress Protection: IP30

The CO_2 room sensor/switch measures the concentration of CO_2 from 450 to 1850 ppm in air using a NDIR sensor which is self-calibrating and maintenance-free in a normal environment.

MOUNTING

The device is to be mounted in a room on a smooth surface, preferably at a minimum height of 1.50 m above the floor.

TRANSPORT AND STOCK KEEPING

Avoid shocks. Stock in original packing. Avoid extreme conditions.

WARRANTY

Any modifications or alterations to the product relieve the manufacturer of all responsibility. The manufacturer bears no responsibility for any misprints or mistakes in this data, and modifications or improvements to the product can be made at any time after date of publication.

MAINTENANCE

In normal conditions our controllers are maintenance-free. If external surfaces requires light cleaning, please use a dry or slightly damp cloth. If heavy cleaning is needed, then we recommend the use of a non-aggressive cleaning product. Particular attention should be paid to ensure that no fluids enter the controller. Only reconnect the controller to the mains electrical supply when it is completely dry.

General danger

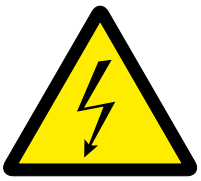

Electrical hazard

All works may only be carried out by skilled personnel following the local regulations, reference to the installation guide and AFTER the controller is completely isolated from the mains.

SDSI – ROOM PASSIVE INFRARED (PIR) SWITCH

FOR DEMAND SWITCHED DRIVES (PIR)

FEATURES

- Input voltage: 25VDC
- Relay output: OC 250V 2A
- Max output Range: 15m
- Flush mounting in standard wall box

DESCRIPTION

Our SDSI passive infrared (PIR) switch is ideal for mounting in a standard wall backing box. Three adjustment pots allow time delay, sensitivity and range to be adjusted ensuring that the controlling relay only closes when the room or space is occupied.

RANGE

Model	Description	Part
SDSI	**Room Passive Infrared for switched output (PIR)**	**430817**

WIRING DIAGRAM

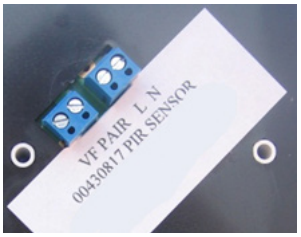

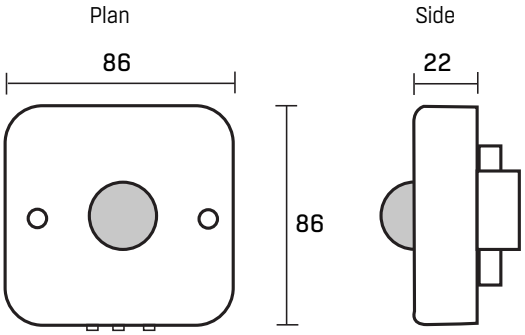

TECHNICAL DATA

Supply voltage: 18-32 VDC ±10 %

Power consumption normal: up to 75 mA, peak: 400 mA for 10 ms per 3 sec period

Operating temperature range: -10 to 50°C

Relay output: 250 VAC 2A

Enclosure: plastic ABS, V0, Ivory,

Ingress Protection: IP30

ENVIRONMENT
ECONOMICAL
EXPERTISE

MOUNTING

The device is to be mounted in a room on a smooth surface, preferably at a minimum height of 1.50 m above the floor.

TRANSPORT AND STOCK KEEPING

Avoid shocks. Stock in original packing. Avoid extreme conditions.

WARRANTY

Any modifications or alterations to the product relieve the manufacturer of all responsibility. The manufacturer bears no responsibility for any misprints or mistakes in this data, and modifications or improvements to the product can be made at any time after date of publication.

MAINTENANCE

In normal conditions our controllers are maintenance-free. If external surfaces requires light cleaning, please use a dry or slightly damp cloth. If heavy cleaning is needed, then we recommend the use of a non-aggressive cleaning product. Particular attention should be paid to ensure that no fluids enter the controller. Only reconnect the controller to the mains electrical supply when it is completely dry.

General danger Electrical hazard

All works may only be carried out by skilled personnel following the local regulations, reference to the installation guide and AFTER the controller is completely isolated from the mains

ENVIRONMENT
ECONOMICAL
EXPERTISE

SDSP54 – PRESSURE SWITCH

FOR DEMAND SWITCHED DRIVES

FEATURES

- Max. operating pressure: 10 KPa for all pressure ranges
- Operating temperature: -20 to +85°C
- Storage temperature -40 to +85°C
- Contacts rating: 250 VAC, 1.5 A
- IP Protection: 54
- Mechanical life cycles: +10 million operations
- Materials: Diaphragm: Silicone, Case: PA 6.6 an POM

DESCRIPTION

These adjustable highly sensitive differential pressure switches are used for monitoring over pressure, vacuum and differential pressure of air or other non-combustible, non-aggressive gases.

The switching set-point can be adjusted by means of a calibrated dial.

Possible applications are air filters, fan monitoring, overheat protection for electric elements, controlling air- and fire-protection dampers, monitoring air flows and more.

RANGE

Model	Description	Part
SDSP54-500	**Pressure switch 50-500Pa DP Pa 20**	**EA002103**
SDSP54-1000	Pressure switch 200-1000Pa DP Pa 100	EA002104

WIRING DIAGRAM

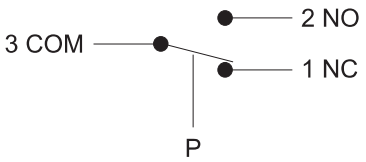

1. Break contact
2. Operating contact
3. Power

DRAWING

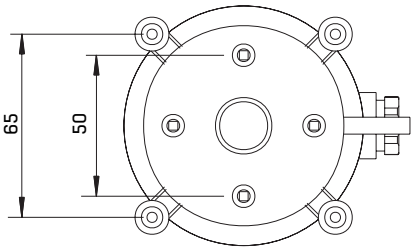

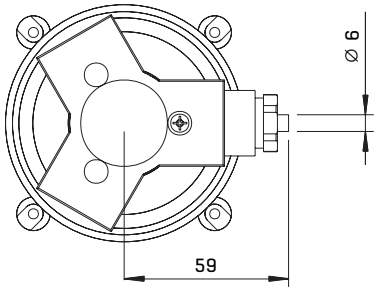

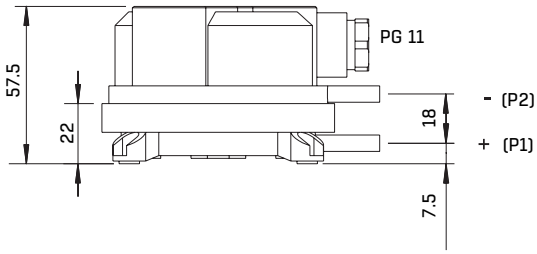

TECHNICAL DATA - DIFFERENTIAL PRESSURE SWITCH

Range Pa

PSW-500: 50-500

PSW-1000: 200-1000

Max. operating pressure 50 mBar or 5000 Pa

Operating temperature -20 - +85°C

Contacts rating 250 VAC, 1.5 A

Mechanical life cycles +- 10 million operations

IP protection IP 54

Diaphragm Silicone

Case PA 6.6 and POM

These adjustable high sensitive differential pressure switches are used for monitoring overpressure, vacuum and differential pressure of air or other non-combustible, non-aggressive gases. The switching set-point can be adjusted by means of a calibrated knob. The switching differential pressure can be adjusted with a screwdriver.

Possible applications are:

- Air filters and fan monitoring
- Overheating protection for electric batteries or electric heating elements
- Controlling air and fire protection dampers
- Monitoring air flows

WARRANTY

Any modifications or alterations to the product relieve the manufacturer of all responsibility. The manufacturer bears no responsibility for any misprints or mistakes in this data, and modifications or improvements to the product can be made at any time after date of publication.

TRANSPORT AND STOCK KEEPING

Avoid shocks. Stock In original packing. Avoid extreme conditions

MAINTENANCE

In normal conditions our controllers are maintenance-free. If external surfaces requires light cleaning, please use a dry or slightly damp cloth. If heavy cleaning is needed, then we recommend the use of a non-aggressive cleaning product. Particular attention should be paid to ensure that no fluids enter the controller. Only reconnect the controller to the mains electrical supply when it is completely dry.

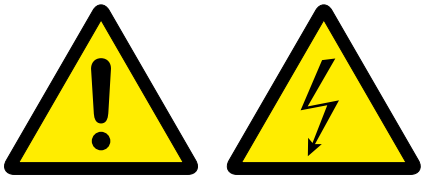

General danger Electrical hazard

All works may only be carried out by skilled personnel following the local regulations, reference to the installation guide and AFTER the controller is completely isolated from the mains.

ENVIRONMENT
ECONOMICAL
EXPERTISE

SDXP54 – PRESSURE SENSOR CONTROLLER

FOR DEMAND PROPORTIONAL DRIVES

FEATURES

- Supply: 15-24 VAC ±10 %/18-32 VDC ±10 %
- Modbus RTU on board RS485
- Auto-tune function
- Analogue output: 0-10 V/0-20 mA
- Digital output: PWM (open collector)
- Response time: 0.5, 1, 2 or 5 seconds
- Operating temperature: 10-60°C (temperature compensated)
- Offset calibration procedure
- Selection of differential pressure or air volume mode/readout via Modbus
- Modbus registers reset function (Factory pre-set values)
- Aluminium pressure connection nozzles
- Usage in clean air and non-aggressive, non-combustible gases
- Long-term stability and accuracy
- Selectable Response time
- IP54 (according to EN 60529)
- Downloadable software and SDPUSB compatible

DESCRIPTION

The SDXP54 is a multi-range differential pressure transmitter with an analogue/digital output and Modbus RTU communication. This calibrated pressure transmitter has eight switchable measuring ranges and is equipped with a state-of-the-art monolithic silicon pressure sensor designed for a wide range of applications.

The piezo-resistive transducer is temperature and pressure compensated and has a high degree of reliability and accuracy. The transmitter has a pushbutton to activate manual zero point calibration and an adjustable offset. Typical applications are medical technology, ventilation and air conditioning ducts, clean rooms and filter monitoring. The sensor can measure air or other non-aggressive, non-combustible gases.

Ideal for variable air volume constant pressure (VAV) and constant air volume (CAV) systems.

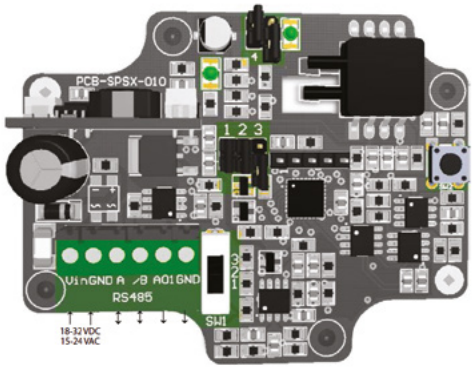

RANGE

Model	Description	Part
SDXP54-2000	Pressure sensor controller 0-2000Pa with Modbus RTU	EA002105

WIRING DIAGRAM

Vin - 15-24 VAC ±10 %/18-32 VDC ±10 %

GND - Ground

A - RS485 signal A

/B - RS485 signal /B

AO1 - Analogue (0-10 VDC/0-20 mA) or digital output (PWM)

GND - Ground

LED green – Normal

Power on red: calibration done and Modbus parameters reset

Jumper response time

SW1	1: 0-10 VDC
	2: 0-20 mA
	3: PWM (open collector)

SW2	calibration switch zero point and factory preset of Modbus registers

4 5	Time
	0,5 sec
	1 sec (default)
	2 sec
	5 sec

Jumper setting range

1 2 3	Range
	0 - 100 Pa
	0 - 250 Pa
	0 - 500 Pa
	0 - 750 Pa
	- 1.000 Pa (default)
	0 - 2.000 Pa
	-50 - +50 Pa
	-100 - +100 Pa

INPUT REGISTERS (READ)

		Data Type	Description	Data	Values
1	Differential pres-sure	signed int.	Measured differential pressure	-100-2.000	1.000 = 1.000 Pa
2	Output Value	unsigned int.	Value of output 0-100%	0-1.000	100 = 10.0%
3	Max pressure limit flag	unsigned int.	Flag indicates pressure is over or below max. limit	0=below limit 1=over limit 2=value written in Holding register 14 is out of range -100-2000 Pa	
4	Min pressure limit flag	unsigned int.	Flag indicates pressure is over or below min. limit	0= over limit 1=below limit 2=value written in Holding register 14 is out of range -100-2000 Pa	
5	Volume flow rate	unsigned int.	Air volume flow rate is m³/h	0-44.000	1.000=1.000 m³/h
6		unsigned int.	Reserved, returns 0		
7	Differential pres-sure range	unsigned int.	Flag indicates current range of SPS-2K0	0=0-100 Pa 1=0-250 Pa 2=0-500 Pa 3=0-750 Pa 4=0-1.000 Pa 5=0-2.000 Pa 6=-50-50 Pa 7=-100-100 Pa	

HOLDING REGISTERS (READ/WRITE)

		Data Type	Description	Data	Values
1	Address	unsigned int.	Device address	1-247 (default:1)	
2	RS485 baud rate	unsigned int.	Modbus communication baud rate	1-9.600 2=19.200 (default) 3=38.400	
3	RS485 parity mode	unsigned int.	Parity check mode	0=8N1 1=8E1 2=801 (default)	
4	Device type	unsigned int.	Device type: read-only	SPS=8	
5	HW Version	unsigned int.	Hardware version of the device, read-only	223-275X	100 = HW version .00
6	SW Version	unsigned int.	Software version of the device, read-only	223-275X	5000 = SW version 5.00
7			Reserved, returns 0		
8			Reserved, returns 0		
9			Reserved, returns 0		
10			Reserved, returns 0		
11	Mode	unsigned int.	Operating mode of SPS-2K0	1 = standalone 2 = Modbus mode mode (default)	
12	Range	unsigned int.	SPS-2K0 Range Selection	0=0-100 Pa 1=0-250 Pa 2=0-500 Pa 3=0-750 Pa 4=0-1.000 Pa 5=0-2.000 Pa 6=-50-50 Pa 7=-100-100 Pa	
13	Response Time	unsigned int.	SPS-2K0 Response Time Selection	0=0.5 s 1=1 s 2=2 s 3=3 s	
14	Max Pressure Limit	signed int.	SPS-2K0 Maximum Pressure Limit	-100 - 2.000 (default: 1.000)	1.000=1.000 Pa
15	Min Pressure Limit	signed int.	SPS-2K0 Minimum Pressure Limit	-100-2000 (default:0)	1.000=1.000 Pa
16	Power-up Timer	unsigned int.	Power up timer before measure the lower limit	0-1.000 (default: 60)	100=100 s
17	K factor selection register	unsigned int.	K factor according to the motor type	0-1.000 (default:0)	0 = differential pressure management
18			Reserved, returns 0		
19			Reserved, returns 0		
20			Reserved, returns 0		

RESET MODBUS REGISTERS

- Press button SW2 for four seconds until the red LED on the printed circuit board blinks twice
- Keep pressing until the red LED blinks three times, the Modbus registers are restored to their default (factory preset) values

CONSTANT PRESSURE WITH DP1S

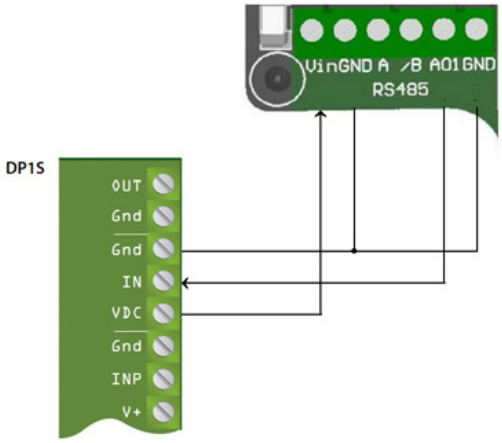

PWM (OPEN COLLECTOR) CONNECTION EXAMPLE

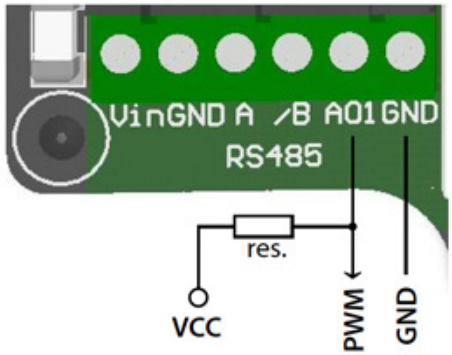

CONNECTION OF MULTIPLE SPS TO BMS SYSTEM IN A NETWORK

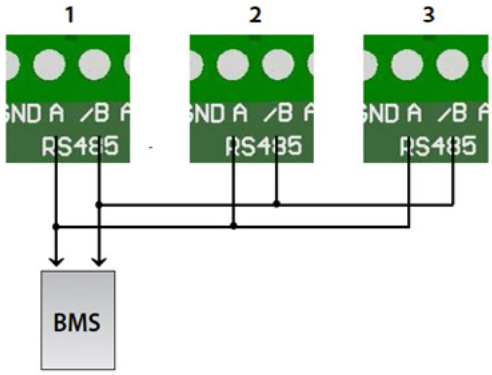

DIMENSIONS AND WEIGHTS

fig. 1

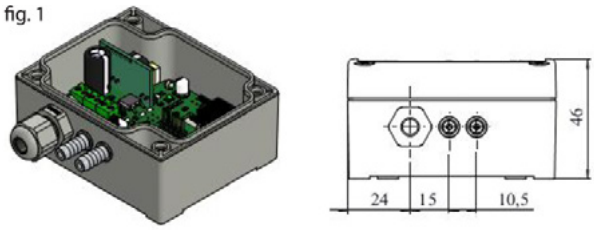

fig. 2

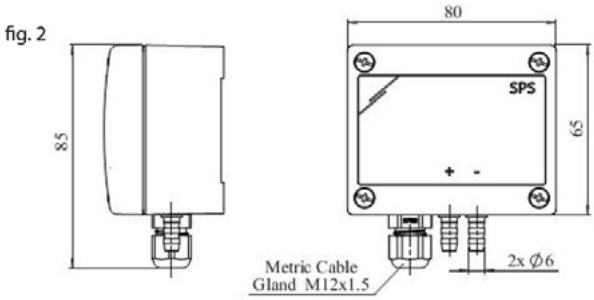

Model	Net weight (g)	Gross weight (g)
SDXP54	120	150

WARRANTY

Any modifications or alterations to the product relieve the manufacturer of all responsibility. The manufacturer bears no responsibility for any misprints or mistakes in this data, and modifications or improvements to the product can be made at any time after date of publication.

TRANSPORT AND STOCK KEEPING

Avoid shocks. Stock In original packing. Avoid extreme conditions

MAINTENANCE

In normal conditions our controllers are maintenance-free. If external surfaces requires light cleaning, please use a dry or slightly damp cloth. If heavy cleaning is needed, then we recommend the use of a non-aggressive cleaning product. Particular attention should be paid to ensure that no fluids enter the controller. Only reconnect the controller to the mains electrical supply when it is completely dry.

General danger

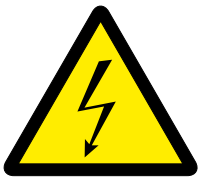

Electrical hazard

All works may only be carried out by skilled personnel following the local regulations, reference to the installation guide and AFTER the controller is completely isolated from the mains.

SDPV-10 - ROOM POTENTIOMETER

FOR DEMAND PROPORTIONAL DRIVES

FEATURES

- Minimum (Vmin) and maximum (Vmax) output setting by internal trimmer
- IP rating flush mounting: IP44, surface mounting: IP54
- Enclosure external: plastic ASA, RAL 9010 white-ivory
- Enclosure internal: polyamide according to IEC 60335
- Operating temperature: 0 - +40°C
- Supply (Vin) 3-15 VDC
- Vmin 10-70 % Vin
- Vmax 30-100 % Vin
- Load ≥ 2 kΩ
- Consumption ≤ 10 mA incl. load
- Off-position

DESCRIPTION

These potentiometers are designed to control fans equipped with an EC motor or in any application were a DC control signal of 0-10VDC is required; such as demand proportional drives.

It is mounted in a splash water proof design enclosure and can be used for inset as well as for surface mounting. There

The SDPV-10 is supplied with customer adjustable min and max settings pre-set from the factory for Vmin 20% and Vmax 100%.

A supply voltage between 3 and 15 VDC is required to provide an infinitely variable output signal between two internally selectable positions: Vmin and Vmax. The load may not be lower than 2 kOhm (RL≥2 kOhm).

RANGE

Model	Description	Part
SDPV-10	**Potentiometer Out:10VDC**	**EA002107**

Suitable for use directly with inverter drives and EC Motors, for use with the iFan panel EA002108 must be used.

WIRING DIAGRAM

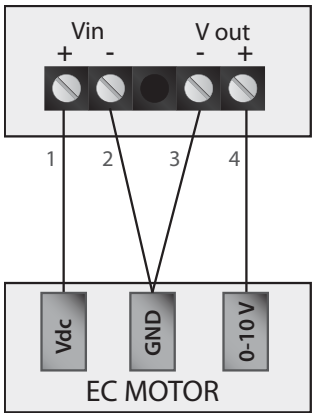

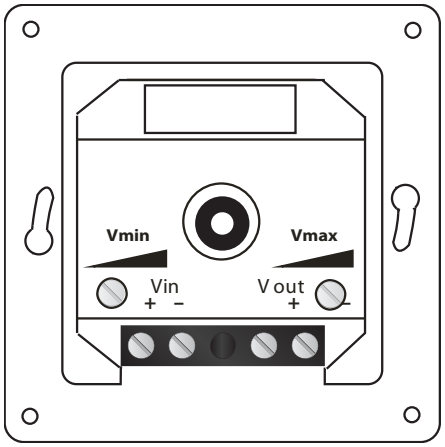

DRAWINGS AND DIMENSIONS

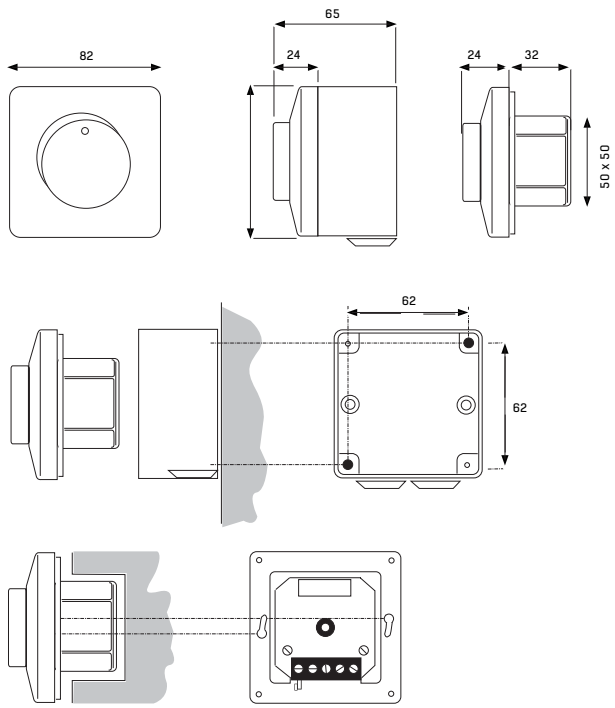

TECHNICAL DATA

Supply (Vin) 3-15 VDC

Vmin 10-70 % Vin Vmax 30-100 % Vin

Load ≥ 2 k Ω

Consumption ≤ 10 mA incl. load

Off-position

Enclosure external: plastic ASA, RAL 9010 white-ivory

Enclosure internal: polyamide according to IEC 60335

Operating temperature: 0 +40°C

This potentiometer is developed to control fans equipped with an EC motor or other demand proportional drive requiring 0-10VDC input. It is mounted in a splash water proof housing and can be used for inset as well as for surface mounting. The potentiometer requires a supply between 3 VDC and 15 VDC, and it provides a stepless output signal between voltage Vmin and voltage Vmax. Vmin and Vmax are internally selectable. Position 0 is the off-position. The load cannot be lower than 2 kΩ (RL≥2 kΩ).

INSET MOUNTING (IP 44)

Connect according to the diagram. Mount the inner case to the wall with the connections pointing down. Mount cover with nut to the wall. Push dial in place at off position.

SURFACE MOUNTING (IP 54)

Mount the case to the wall together with included grommets. Connect according to the diagram. Mount inner case in surface mounting case with included screws. Mount cover with nut to surface mounting case. Push dial in place at off position. When needed a 5 mm hole for condensation water is to be drilled at the bottom of the surface mounting case.

ISOLATION AND WIRING (SEE DIAGRAM ON PREVIOUS PAGE)

The cable connecting the device control should not exceed 4 m. For a cable length between 4 and 12 m we recommend using a shielded cable. For cable longer than 12 m use the SDPV-230 device.

TRANSPORT AND STOCK KEEPING

Avoid shocks and extreme conditions, stock in original packing.

WARRANTY

Any modifications or alterations to the product relieve the manufacturer of all responsibility. The manufacturer bears no responsibility for any misprints or mistakes in this data, and modifications or improvements to the product can be made at any time after date of publication.

MAINTENANCE

In normal conditions our controllers are maintenance-free. If external surfaces requires light cleaning, please use a dry or slightly damp cloth. If heavy cleaning is needed, then we recommend the use of a non-aggressive cleaning product. Particular attention should be paid to ensure that no fluids enter the controller. Only reconnect the controller to the mains electrical supply when it is completely dry.

General danger

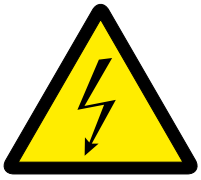

Electrical hazard

All works may only be carried out by skilled personnel following the local regulations, reference to the installation guide and AFTER the controller is completely isolated from the mains.

SDPV-230 – ROOM POTENTIOMETER

FOR DEMAND PROPORTIONAL DRIVES

FEATURES

- Voltage supply: 230 VAC, 50/60 Hz
- Selectable output: 0-10 V, 0-20 mA and PWM
- Load: 0-10 V and PWM > 2 kΩ / 0-20 mA < 500 Ω
- Minimum (Vmin) and maximum (Vmax) output setting by internal trimmer
- IP rating flush mounting: IP44, surface mounting: IP54
- Enclosure external: plastic ASA, RAL 9010 white-ivory
- Enclosure internal: polyamide according to IEC 60335
- Operating temperature: 0...40°C

DESCRIPTION

This potentiometer is developed to control fans equipped with an EC motor or demand proportional drives without a 10VDC output. It is mounted in a splash water proof housing and can be used for inset as well as for surface mounting.

The potentiometer needs a supply of 230 VAC, and gives a stepless output signal of 0-10 VDC or 0-20 mA and PWM between voltage Vmin and voltage Vmax. Position 0 is the off-position. The load cannot be lower than 2 kΩ (RL≥2 kΩ) in 0-10 V output mode or higher than 500 Ω if 0-20 mA

RANGE

Model	Description	Part
SDPV-230	**Potentiometer In:230VAC Out:10VDC**	**EA002108**

Suitable for use with the TEDP, TDDP and iFan panel, when used directly on an inverter and EC motor EA002107 can be used.

WIRING DIAGRAM

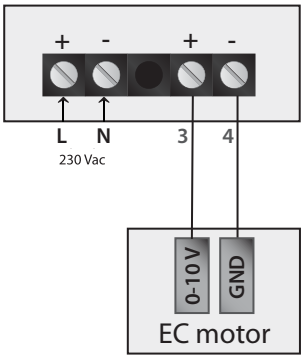

L N - power supply 230 VAC

Vout - output 0-10 VDC / 0-20 mA / PWM

Vmin - adjustment trimmer min speed

Vmax - adjustment trimmer max speed

SW switch analogue output selection: 0-10 VDC / 2: 0-20 mA / 3: PWM

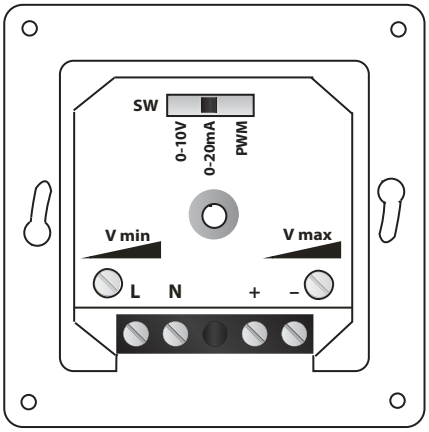

DRAWINGS AND DIMENSIONS

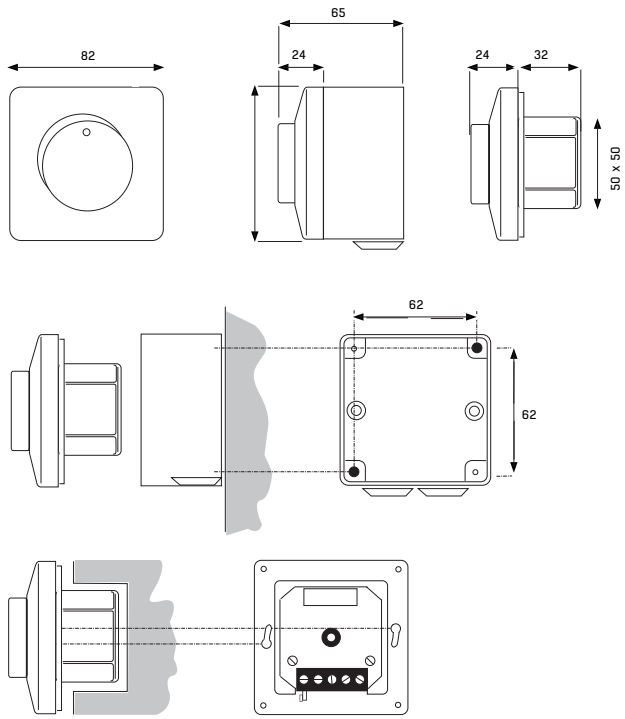

TECHNICAL DATA

Mode 0-10 V 0-20 mA PWM

Output 0, 1-10 V 0, 2-20 mA 0, 10 - 100 % PWM

Vmin 1 - 7 VDC 2-10 mA 10-70 % PWM

Vmax 3 - 10 VDC Vmax: 6-20 mA 30-100 % PWM

Enclosure external: plastic, ASA, RAL 9010 white-ivory

Enclosure internal: polyamide According to IEC 60335

Operating temperature: 0...40°C

This potentiometer is developed to control fans equipped with an EC-motor. It is mounted in a splash water proof housing and can be used for inset as well as for surface mounting.

The potentiometer needs a supply of 230 VAC, and gives a stepless output signal of 0-10 VDC or 0-20 mA and PWM between voltage Vmin and voltage Vmax. Position 0 is the off-position. The load cannot be lower than 2 k Ω (RL≥2 k Ω) in 0-10 V output mode or higher than 500 Ω if 0-20 mA output is selected.

INSET MOUNTING (IP 44)

Break mains voltage. Connect according to diagram. Mount the inner case to the wall with the connections pointing down. Mount cover with nut to the wall. Push dial in place at off position.

SURFACE MOUNTING (IP 54)

Break mains voltage. Mount surface mounting case to the wall together with included grommets. Connect according to diagram. Mount inner case in surface mounting case with included screws. Mount cover with nut to surface mounting case. Push dial in place at off position. When needed a 5 mm hole for condensation water is to be drilled at the bottom of the surface mounting case.

WIRING (SEE PREVIOUS PAGE)

TRANSPORT AND STOCK KEEPING

Avoid shocks and extreme conditions, stock in original packing.

WARRANTY

Any modifications or alterations to the product relieve the manufacturer of all responsibility. The manufacturer bears no responsibility for any misprints or mistakes in this data, and modifications or improvements to the product can be made at any time after date of publication.

MAINTENANCE

In normal conditions our controllers are maintenance-free. If external surfaces requires light cleaning, please use a dry or slightly damp cloth. If heavy cleaning is needed, then we recommend the use of a non-aggressive cleaning product. Particular attention should be paid to ensure that no fluids enter the controller. Only reconnect the controller to the mains electrical supply when it is completely dry.

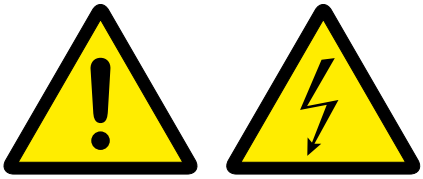

General danger Electrical hazard

All works may only be carried out by skilled personnel following the local regulations, reference to the installation guide and AFTER the controller is completely isolated from the mains

USEFUL INFORMATION

FAN LAWS

Speed change – constant size – constant density
Volume Flow ∝ Rotational Speed
Pressure (Static, Dynamic and Total) ∝ (Rotational Speed)^2
Power Absorbed ∝ (Rotational Speed)^3

Size change – constant speed – constant density
(For geometrically similar fans only)
Volume Flow ∝ (Impeller Diameter)^3
Pressure (Static, Dynamic and Total) ∝ (Impeller Diameter)^2
Power Absorbed ∝ (Impeller Diameter)^5

Density change – constant speed – constant size
Volume Flow = No change
Pressure (Static, Dynamic and Total) ∝ Density
Power Absorbed ∝ Density

The laws can be combined where simultaneous changes in size, speed and density are required.

PRESSURE

It is possible to convert t from Total Pressure (PF) to Static Pressure (PsF) using the following equation(s):

Total Pressure (PF) = Static Pressure (PsF) + Dynamic Pressure (PdF) and Static Pressure (PsF) = Total Pressure (PF) – Dynamic Pressure (PdF)

Dynamic Pressure (PdF) is also known as Velocity Pressure (Pv) and this is a function of Volume Flow (qv) and fan outlet area (m²). This can be calculated using:

Dynamic Pressure (PdF) - 0.5r V2 (Pa)

Where r = Air Density (kg/m^3) (Standard is 1.2 kg/m^3)

V = Air Velocity (m/s)

Air Velocity - $V = \frac{q_V \times 4}{\pi d^2}$ where d is the diameter of the fan (m)

q_V = Volume Flow (m^3/s)

Absorbed Power

$$\left\{ \frac{\text{Volume flow (m}^3\text{/s x Total Pressure (Pa)}}{\text{Total Efficiency x 10}} \right\} \text{kW}$$

Air Density

Standard Air density is 1.2kg/m^3
One condition that gives Standard Air is: 16°C, 100 hPa barometric pressure, 65% relative humidity.

Change due to temperature

$$\text{New Density} - \text{Old Density} \times \left\{ \frac{273 + \text{Old Temperature °C}}{273 + \text{New Temperature °C}} \right\} \text{kg/m}^3$$

Change due to altitude

$$\text{New Density} - \text{Old Density} \times \left\{ \frac{288 - 0.00649\ H}{288} \right\} \text{kg/m}^3$$

Where H = Height above sea level in metres

IP RATINGS

Degrees of Protection (Ingress Protection)

DESIGNATION	1ST NUMERAL PROTECTION AGAINST CONTACT AND INGRESS OF FOREIGN BODIES	2ND NUMERAL PROTECTION AGAINST WATER
IP44	Protection against the ingress of solid foreign bodies with a diameter greater than 1mm.	Water splashed against the motor from any direction shall have no harmful effect.
IP55	Complete protection against contact with live or moving par ts inside the enclosure. Protection against harmful deposits of dust. The ingress of dust is not totally prevented, but dust cannot enter in an amount sufficient to inter fere with satisfactory operation of the machine.	Water projected by nozzle against the motor from any direction shall have no harmful effect IP55 as despatched. Drain holes are incorporated such that by removing the appropriate plugs all-weather protection can be provided and condensation build-up prevented.
IP56		Motor protected against conditions on a ship' s deck.
IP65	Protected from total dust ingress.	Water projected by nozzle against the motor from any direction shall have no harmful effect IP65 as despatched. Drain holes are incorporated such that by removing the appropriate plugs all-weather protection can be provided and condensation build-up prevented.
IP66	Protected from total dust ingress.	Water projected in powerful jets (12.5 mm nozzle) against the enclosure from any direction shall have no harmful effects.

USEFUL INFORMATION

AIR CHANGE PER HOUR

Although no hard and fast rules can be laid down for rates of air changes the recommendations in the table below may be taken as a general guide.

BUILDING TYPE	VENTILATION STRATEGIES	RECOMMENDED VENTILATION RATE	BUILDING PROTECTION MEASURE	OPERATION PERIOD / OCCUPANCY
Broadcasting studios	Mechanical ventilation Cooling comfort	6-10 ACH	None	Variable operation times and periods, 24 hours a day in operation
Clean room	Mechanical ventilation	10-120 ACH for non-laminar-flow clean room depending on type of work 500-600 ACH for laminar-flow clean room	HEPA filters, positive room pressure	24 hours a day
Computer room / data centre	Mechanical ventilation Air conditioning	Typical 1 ACH or minimum fresh air to suit occupancy	The air conditioning units usually include filtration	24 hours a day in operation
Hospitals & health care	Mechanical ventilation in areas such as operating theatre Natural ventilation in areas such as ward areas	6-15 ACH depending on the buildings functionality of the room	Different classes of filters depending on application The building has an overall positive or neutral pressure	Up to 24 hours a day
Laboratories	Mechanical ventilation	6-15 ACH	HEPA filtration of extract air Negative Pressure	Up to 24 hours a day depending on activity
Museums, libraries & art gallaries	Mechanical ventilation Air conditioning	Depends on nature of exhibits	Particle and gaseous filtration is recommonded	24 hours a day in operation
Schools & educational buildings	Mechanical ventilation Natural Ventilation	Classrooms capable of $3L{\cdot}s^{-1}$ per person for design occupancy when unoccupied Classrooms capable of $8L{\cdot}s^{-1}$ per person for design occupancy when unoccupied Minimum 6 ACH in washing areas	None	Variable operation times and periods Mostly daytime during school terms
Shops & retail premises	Mechanical ventilation Air conditioning	$5\text{-}8L{\cdot}s^{-1}$ per person maximum design occupancy	The building should be maintained under positive pressure	Variable operation times and periods Mostly Daytime

UNIT CONVERSION

DIMENSIONAL UNITS

in x 25.4 = mm

ft x 0.305 = m

ft3 x 0.028 = m³

lb x 0.454 = kg

PRESSURE UNITS

Pa = N/m²

MMWG X 9.81 = PA

inwg x 248.66 = Pa

mbar x 100 = Pa

POWER UNITS

BTU x 1054.8 = J

HP x 0.746 = kW

kcal/h x 0.00116 = kW

Ton Refrigeration x 3.52 = kW

BTU/ft²h°F x 5.678 = J/m²s°C or W/m²s°C

VOLUME UNITS

l/s / 1000 = m³/s

m³/h / 3600 =m³/s

CFM x 0.00047 = m³/s

kg/s x 0.83 = m³/s

kg/h x 0.0023 = m³/s

USEFUL INFORMATION

SFPS

Maximum specific fan power in air distribution systems in new and existing buildings.

SYSTEM TYPE	SFP (W/(L.S)) NEW BUILDINGS	SFP (W/(L.S)) EXISTING BUILDINGS
Central balanced mechanical ventilation system with heating and cooling	1.6	2.2
Central balanced mechanical ventilation system with heating only	1.5	1.8
All other central balanaced mechanical ventilation systems	1.1	1.6
Zonal supply system where fan is remote from zone, such as ceiling void or roof mounted units	1.1	1.4
Zonal extract system where fan is remote from zone	0.5	0.5
Zonal supply and extract ventilation units, such as ceiling void or roof units serving single room or zone with heating and recovery	1.9	1.9
Local balanced supply and extract ventilation systems such as wall / roof units serving single area with heat recovery	1.6	1.6
Local supply or extract ventilation units such as window / wall / roof units serving single area (e.g. toilet extract)	0.3	0.4
Other local ventilation supply or extract units	0.5	0.5
Fan assisted terminal VAV unit	1.1	1.1
Fan coil unit (rating weighted average*)	0.5	0.5
Kitchen extract, fan remote from zone with grease filter	1.0	1.0

* The rating weighted average is calculated by the following formula:

$$\frac{P_{mains,1} \times SFP_1 + P_{mains,2} \times SFP_2 + P_{mains,3} \times SFP_3 + \ldots}{P_{mains,1} + P_{mains,2} + P_{mains,3} + \ldots}$$

where P_{mains} is useful power supplied from the mains in W.

Extending specific fan power for additional components in new and existing buildings

COMPONENT	SFP (W/(L.S))
Additional return filter for heat recovery	+0.1
HEPA filter	+1.0
Heat recovery - thermal wheel system	+0.3
Heat recovery - other systems	+0.3
Humidifier / dehumidifier (air conditioning system)	+0.1

SYMBOLS

The symbols used in this specification are In line with National and European standards covering Ventilation for Buildings by CEN/TC15

$m^3.s^{-1}$	(m^3/s)
$m.s^{-1}$	(m/s)
$m^3.s^{-1}m^2$	($m^3/s/m^2$)
$l.s^{-1}$	(l/s)
$kg.m^{-2}$	(kg/m^2)

USEFUL INFORMATION

DW172 - KITCHEN VENTILATION

EXTRACT FLOW RATES

All cooking processes create approximately 35% radiant and 65% convected heat which, in the absence of cross-draughts, rises vertically in a thermal updraught called a 'plume'. This is shown in Figure 1. Most of the contaminant released from the food and heat source is entrained with additional air which causes the plume to enlarge and the average temperature and velocity to decrease. The rate of exhaust from the hood shall equal or slightly exceed the flow rate of the plume, additional extract air (see Table 3; Canopy Factors) will be required to resist the cross-draughts that would otherwise carry the plume away from the canopy.

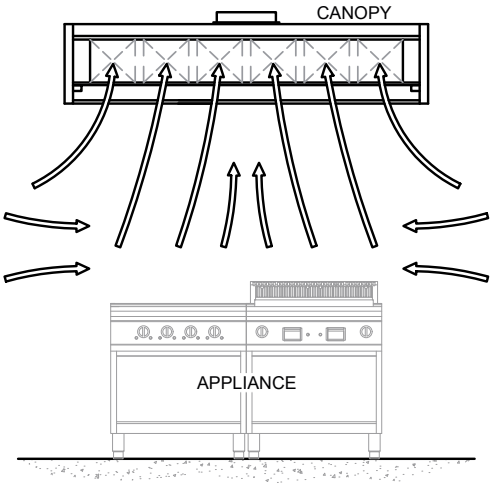

Fig 2 - Airflow Pattern

The calculation of the optimum extract flow rate is the most important element of canopy design as too much air will cause as many problems as too little. Whilst the size of the cooking appliances and the demands of the menu determine the size of the canopy, it is the type of appliance that determines the flow rate of air to be extracted. Those that require ventilation are shown in Table 2.

The 'Thermal Convection Method' of calculation should be the only method used. A commercial kitchen where no cooking is taking place is classified as a Preparation Area, i.e. 20 air-changes per hour.

Thermal Convection Method

This method follows the procedure covered in the CIBSE Guide B2 but has been expanded to include a wider range of equipment. Details of the equipment to
be ventilated shall be allocated a thermal convection coefficient, which is the recommended volume of air to be extracted in m3.s-1 per m2 of surface area of the appliance. The area of each appliance is multiplied by the factor for that appliance, the total value for each item of equipment under the canopy/ventilated ceiling shall be added together to determine the total volume to be extracted. The coefficient will vary depending on whether the appliance is gas or electric, and these are scheduled in Table 2. Refer to Table 4 for worked example of flow rate calculation.

The theoretical extract flow rate would only be achieved under draught-free laboratory conditions. The type, location of the canopy/ventilated ceiling and
the likelihood of cross-draughts will also have an effect upon the amount of air required. The more enclosed the cooking operation, the less exhaust air is needed to ventilate it, whilst appliances open on all four sides will need a larger flow rate of exhaust air than where only one side is open. The canopy factors given in Table 3 shall therefore be multiplied by the calculated volume to determine the actual extract flow rate. Consideration shall also be given to the 'active area' of ventilated ceilings when the height increases. See Section 7.

Anticipated figures for usage (diversity factors) cannot be used. For details on Demand Controlled Kitchen Ventilation Systems see Section 22.

Extracted from BESA DW/172 Kitchen Ventilation Systems Document - Second Edition

USEFUL INFORMATION

Table 2: Appliance, Coefficient and Temperature Schedule

Appliance	Coefficient		Surface
	Gas	Electric	Temp
MISCELLANEOUS	m^3/s per m^2		°C
Benches, Spreaders and Worktops	0.03	0.03	25
Sink	0.15	0.15	25
Pass Through Dishwasher*	0.30	0.30	61
Pan/Utensil Wash Machine	0.40	0.40	42
Rack and Flight Dishwasher	see manufacturer's literature		58
Coffee Maker	-	0.03	25
Light Duty Microwave Oven/Toaster	-	0.03	25
Bains Marie/Hot Cupboard	0.20	0.15	57
Chip Scuttle	-	0.15	35
Servery Counter - Hot Food	0.24	0.24	73
Water Boiler/Still/Beverage Unit	0.25	0.20	78
Refrigeration Unit	see manufacturer's literature		-

Appliance	Coefficient		Surface
	Gas	Electric	Temp
BOILING/ROASTING/STEAMING	m^3/s per m^2		°C
Induction Hob / Ceramic Stove	-	0.20	30
Combination Microwave Ovens	-	0.15	35
Open-Top Range & Oven*	0.40	0.30	190
*see important note at the end of this table & table 2a.			
Solid Top Oven Range	0.60	0.51	420
Boiling Table / Hob Top / Stock Pot Stove*	0.35	0.25	190
*see important note at the end of this table & table 2a.			
Boiling Pan / Steam Kettle	0.35	0.25	146
Bratt Pan	0.60	0.50	240
Heavy Duty Multi/Bulk Cooking Pan	-	0.90	240
Pasta Cooker	0.30	0.20	120
Roasting Oven (with worktop)	0.25	0.20	98
Tandoori Oven (not solid fuel)	0.50	0.33	90
Combination Ovens (Combis): (if stacked, use larger value)			
Stand-Mounted 6 grid.	0.35	0.30	92
Stand-Mounted 10 grid.	0.45	0.32	92
Stand-Mounted 12 grid.	0.50	0.35	92
Stand-Mounted 20 grid.	0.60	0.40	92
Stand-Mounted 40 grid.	0.75	0.55	92
Atmospheric Steamer	0.35	0.20	125
Pressure Steamer	0.35	0.20	120
Dim Sum Steamer	0.30	0.20	123
Fan-Assisted Convection Oven	0.40	0.30	86
Holding Oven	-	0.10	57

Appliance	Coefficient		Surface
	Gas	Electric	Temp
FRYING	m^3/s per m^2		°C
Deep Fat Fryer*	0.50	0.45	190
*see important note at the end of this table & table 2a.			
Pressure Fryer	0.50	0.45	170

Appliance	Coefficient		Surface
	Gas	Electric	Temp
GRILLING & BROILING	m^3/s per m^2		°C
Mid Steel Griddle	0.30	0.25	190
Chrome Griddle / Plancha	0.45	0.40	290
Induction Griddle	-	0.27	62
Clam Shell / Contact Grill	0.45	0.34	105
Upright or Chain Broiler	0.75	0.55	410
Salamander Grill	0.75	0.55	260
Rotisserie (not solid fuel)	0.75	0.55	195
Shawarma Kebab Machine	0.75	0.55	195
Chargrill/Charbroiler	0.95	0.52	350
Vapourising Grill (less than 16kW/m2)	0.75	-	170
Chinese Wok Range (Induction)	-	0.40	88
Chinese Wok Range	0.90	-	280
Chinese Wok Range (Turbo)	1.00	-	370

Appliance	Coefficient		Surface
	Gas	Electric	Temp
PIZZA COOKING & BAKING (gas or electric only. No solid fuel)	m^3/s per m^2		°C
Conveyor Pizza Oven			
Single Deck	0.30	0.25	90
Double Deck	0.60	0.50	90
Triple Deck	0.90	0.75	90
Deck Pizza Oven			
Single Deck	0.20	0.15	90
Double Deck	0.40	0.30	90
Triple Deck	0.60	0.45	90
Pastry / Baking Ovens			
Single Deck	0.15	0.10	90
Double Deck	0.30	0.20	90
Triple Deck	0.45	0.30	90

Extracted from BESA DW/172 Kitchen Ventilation Systems Document - Second Edition

USEFUL INFORMATION

Appliance	Coefficient		Surface
	Gas	Electric	Temp
SOLID FUEL COOKING (including gas ovens that have solid fuel capability)	**m^3/s per m^2**		**°C**
Open Grill/BBQ/Charcoal Pit	0.96		420
Enclosed Charcoal Oven	1.24		210
Stone Hearth Oven	0.45		90
Smoker	see manufacturers literature		-
Tandoori Oven	0.55		90
Rotisserie	0.85		95

***IMPORTANT NOTE:**

IGEM/UP/19 (in association with the HSE and GAS SAFE) states that Carbon Dioxide (CO2) levels within a commercial kitchen, that includes one or more gas-fired appliance, must not exceed 2800ppm. Experience has shown that this is not a problem for the vast majority of projects. However, occasionally a design involves the incorporation of multiple gas appliances of a certain type and if the standard coefficients as shown above in Table 2 are used to calculate the extract flow rate, then there exists a clear risk that the 2800ppm threshold could be exceeded. For projects such as Food Technology Training Kitchens, which should be treated as commercial kitchens even if domestic-type equipment is installed as stated in IGEM/UP/11, there might be upwards of, say, 16 x 6-burner gas ranges, then to mitigate the risk of excessive levels of CO2 in the space, it is suggested that the coefficients in Table 2a below are used. This only applies to the appliances marked with.

Table 2a: Appliance, Coefficient and Temperature Schedule for CO2 Reduction where Multiple Selection is Required.

Appliance		Coefficient		Surface
		Gas	Electric	Temp
		($m^3.s^{-1}m^2$)		**°C**
Open-Top Range & Oven	(3 No.)	0.50	0.25	190
	(4 No. & above)	0.60	0.25	190
Boiling Table/Hob Top/Stock Pot Stove	(3 No.)	0.45	0.25	190
	(4 No. & above)	0.55	0.25	190
Deep Fat Fryer	(3 No.)	0.60	0.45	190
	(4 No. & above)	0.75	0.45	190

GENERAL NOTES:

1. Other Gas Thermal Coefficients have been analysed and modified to reflect GAS SAFE suggestions for the control of Carbon Dioxide (CO2) in commercial kitchens. Ref. IGEM/UP/19.

2. Application of Canopy / Ventilated Ceiling Factors must be applied.

3. Treat LPG appliances the same as "gas".

4. It is the responsibility of catering equipment manufacturers to test new models and provide ventilation requirements, such as they would for water, gas & electrical services, to a recognised international standard.

5. Designers should always be aware that it is essential to consider the context in which the catering equipment is being used and that exceptional circumstances call for special consideration.

6. The coefficients for Combination Ovens assume that the recommended two-stage door opening procedure is utilised by operatives, so allowing proper capture of the steam plume and that doors on "stacked" Combis would never be opened simultaneously.

Table 3: Canopy Factors

Type	Open Both Ends	Open One End	Close Both Ends
Low Level	1.15	1.10	1.05
Passover	1.15	1.10	1.05
Overhead Wall	1.25	1.20	1.15
Overhead Wall, Island Mounted	1.60	1.50	1.40
Island	1.35	1.25	1.15

Example of flow rate calculation: Method 1.

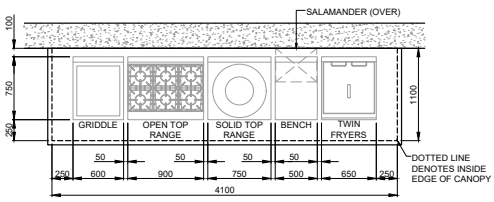

Determine the model type, plan size and power source for each item of cooking equipment located under the canopy.

Calculate the plan area of the cooking equipment from Figure 2 and from Table 2, allocate a thermal coefficient for each item of equipment.

Extracted from BESA DW/172 Kitchen Ventilation Systems Document - Second Edition

USEFUL INFORMATION

Multiply the area by the coefficient to obtain a theoretical extract flow rate for each them.

Add the individual rates to arrive at a total extract flow rate for the canopy.

Select the appropriate canopy factor to suit the type and location of canopy.

Multiply the total by the canopy factor to arrive at the total extract flow rate.

Table 4 Calculations - Thermal Convection Method

Item	Plan size (mm)	Power (kW)	Area m^2	Coefficient	Flow Rate m^3s^{-1}
Griddle (mild steel)	600 x 700	gas	0.450	0.30	0.135
Open Top Range	900 x 750	gas	0.675	0.40	0.270
Solid Top Range	750 x 750	gas	0.562	0.60	0.338
Bench	500 x 750	-	0.375	0.03	0.011
Twin Fryers	650 x 750	Elec	0.487	0.45	0.219
Salamander Grill	500 x 400	gas	0.200	0.75	0.150
Theoretical extract flow rate required					1.123
Canopy Factor - overhead wall open both ends					1.250
Specific extract flow rate required					1.404

The calculation of extract flow rates for ventilated ceilings should be in accordance

with the procedures set out above.
4.6 Where concentrated high-heat cooking appliances create a possible 'hot spot' within a canopy or ventilated ceiling area, partitioning of the grease filter plenum shall be considered to provide a higher dedicated extract duty above such equipment. In such circumstances care shall be taken to ensure maximum air duties are not exceeded for the particular filter bank selected. Make up air and extract spigots shall be sized and positioned accordingly.

Following the determination of the required extract flow rate, the number and type of separators shall be selected.

MAKE-UP AIR

In order for the kitchen extract system to function correctly, it is essential that an allowance shall be made for the provision of replacement air. This should be achieved either by introducing mechanical supply air, or by making provision for natural infiltration.

Kitchens with all electric equipment with air volumes below both 0.9m³.s-1 and 40 air changes per hour do not need mechanical fresh air intake, natural unpowered fresh air ventilation via pre engineered grilles or ductwork is sufficient. For kitchens without access to an external wall seek professional advice. Care must be taken to ensure that the fresh air requirement of 10 l.s-1/person is complied with.

The supply air is best dealt with through a low velocity perforated diffuser such that the air flow does not entrain air captured from within the canopy into the occupied space.

Where a natural ducted inlet for relief air is selected it should be as short as possible, and with filtration since the incoming air is likely to be contaminated. Figures 8a and 8b.

Where mechanical input is selected, the system shall provide a minimum of 75% and a maximum of 95% of the total extracted volume, with the remaining infiltrating naturally into the kitchen from surrounding areas. The mechanical or 'fan assisted' method should ensure that the kitchen remains under negative pressure thus preventing the potential transfer of kitchen odours to areas outside the kitchen.

Make-up air may be introduced into the kitchen by means of the canopy or ventilated ceiling, or through the ventilation system or by a combination of all three. Where air is introduced through the Where perforated plate diff users are used, the free area should be a maximum of 50% and a minimum of 35%. The air velocity should be calculated at a minimum of 0.8ms-1 and a maximum of 1.25ms-1, when taken across the complete face area of the diff user.

The fan powered system provides positive control and therefore should be the preferred method used. With natural infi ltration the following problems may occur:

- unfiltered air will enter the kitchen.
- air may otherwise be drawn from dirty areas.
- draughts and discomfort may be caused in cold weather.
- uncontrolled air movement may aff ect the cooking process.
- 'cooling' cannot be provided to persons adjacent to the canopy.

Extracted from BESA DW/172 Kitchen Ventilation Systems Document - Second Edition

USEFUL INFORMATION

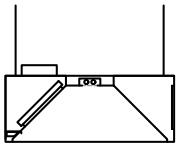

FIG 11a - LED OR FLUORESCENT LUMINAIRE IN ROOF

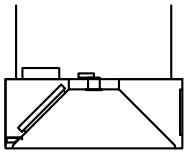

FIG 11c - SPOTLIGHTS IN ROOF

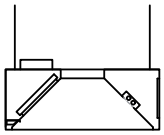

FIG 11b - LED OR FLUORESCENT LUMINAIRE IN SUPPLY PLENUM

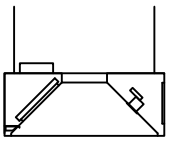

FIG 11d - SPOTLIGHTS IN SUPPLY PLENUM

NB: When the air is inboard then that duty shall be added to the calculated extract flow rate to determine the volume handled by the fan.

Make-up air should be a minimum air entry temperature of 10°C for canopies and 16°C for ventilated ceilings. See Table 1.

For general make-up air, standard temperatures as specified in Section 3 should be used.

When selecting plant for kitchen make-up air, the following shall form part of the ventilation system:

- Filters made of synthetic materials and having a minimum efficiency of ePM1 70% or 75% (see Appendix B). Glass fibre products shall not be used.
- Means of varying the fan duty shall be provided to give the flexibility to accommodate future changes in room usage, occupancy and types of cooking undertaken. An electrical interlink with the extract plant shall be installed.
- Where located within the kitchen, plant shall be accessible for cleaning. A packaged air handling unit is preferable as individual plant items will present hygiene problems.
- A natural ducted airway allowing outside air into the kitchen shall be provided. This again should be positioned at high level, be as short as possible and shall be filtered. Care shall be taken with the location of the discharge grille because with low external temperatures, discomfort may be experienced by the kitchen users. This option should not be selected when large air volumes are involved.
- Whilst door transfer grilles may be used in conjunction with other input systems, there is usually inadequate space to accommodate sufficient grilles to handle the large volumes of air required with kitchen extract systems. Transfer grilles in doors however, help to minimise air pressure influences on opening and closure.
- Visible or audible means of proving the existence and indicating the supply air filter condition shall be installed, as dirty filters will adversely affect the air balance.
- Where a natural make-up air system is selected, the resistance shall be included in the overall system resistance against which the extract fan will have to operate.
- Care shall be taken with infi ltrated air to ensure that it is not taken from 'dirty' areas.
- Whilst air conditioned kitchens are the exception in the United Kingdom, where it is decided to cool the make-up air, further details are given in Appendix E.
- Details of the various types of natural air transfer systems are shown in Figs. 8a and 8b below:
- A significant factor behind a poorly performing kitchen ventilation system is often due to a badly designed/installed.
- Make-up air system. Avoid high velocity "throws", select perforated plate diffusers rather than proprietary grilles/diffusers and do not allow the incoming supply air to disrupt the rising extract plume.

Extracted from BESA DW/172 Kitchen Ventilation Systems Document - Second Edition

USEFUL INFORMATION

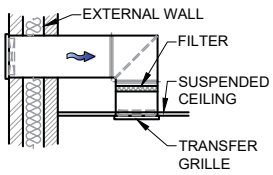

FIG 8a - OUTSIDE AIR TRANSFER

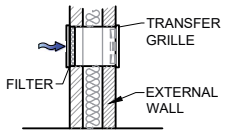

FIG 8b - LOW LEVEL WALL TRANSFER

SOUND ATTENUATION

Kitchen ventilation systems usually operate at sensitive times such as early in the morning and late at night, so the amount of noise generated shall be kept to a minimum. The level of noise and vibration from the plant shall not be transmitted through either the structure of the building or the ductwork so as to be a nuisance for those either working in the conditioned space, or in adjoining premises.

The average human cannot distinguish between two sound pressure levels up to 2dB apart. Above this level there is a perceptible increase in the overall level of noise. Acoustic equipment shall therefore be selected to limit the increase in level to 2dB above ambient.

Tolerance of noise levels is subjective but within the conditional space levels should meet the requirements of BS 8233 "Guidance on sound insulation and noise reduction for buildings" which are summarized below.

- Kitchen 50dBA – 55dBA; where the lower value is considered as a good standard and the upper figure a reasonable standard.
- Restaurant 40dBA – 55dBA; where the lower is considered as a good standard and the upper figure is a reasonable standard.
- BB93 Acoustic design of schools-performance standards. Kitchens 50 dBA.

The atmospheric side of any system requires individual examination but Local Authorities will usually advise on their specific noise requirements. Local Authorities usually refer to BS 4142 - "Rating of Industrial Noise Affecting Mixed Residential and Industrial Areas" as the basis of their criteria. Generally, the maximum acceptable noise level at the discharge point of the system is that which should not increase the overall level by more than 2dB(A). This is difficult to achieve in residential areas and wherever possible, vertical discharge of ducts, should be considered. Slower running fans and lower duct discharge velocities will assist with reducing overall noise but may be as commercial as a suitable online attenuator.

Where in-line attenuators are used they shall be constructed so that there is no grease impregnation into the acoustic media. A protective membrane shall be specified for this purpose, this will reduce the design performance of the attenuator. This should be taken into account when selection is made.

Isolation of vibration using correctly specified resilient mountings or pads, together with heat resistant flexible connections to the ductwork will reduce transmission to the structure.

Table 5: Duct Velocities

	Supply	Extract
Mains Runs	6-8 ms^{-1}	6-9 ms^{-1}
Branch Runs	4-6 ms^{-1}	5-7 ms^{-1}
Spigots	3-5 ms^{-1}	5-7 ms^{-1}

When designing kitchen supply and extract systems the duct velocities shown in Table 5 shall be followed.

SOLID FUEL APPLIANCES (THIS DOES NOT APPLY TO NATURAL OR LP GAS APPLIANCES)

Burning wood and other solid fuels for commercial cooking is becoming increasingly popular. Ventilation in these situations must go above and beyond standard grease duct ventilation requirements.

This section deals with the safe use and risks associated with the use of solid fuel appliances such as Tandoori ovens, Charcoal grills, and wood fired pizza ovens in commercial kitchens. This also applies when solid fuel is used as a secondary fuel and addresses exposure to Carbon Monoxide (CO) gas, the risk of fire and the need to provide adequate ventilation.

For details of Carbon Monoxide (CO) and Carbon Dioxide (CO2) see Appendix F and G.

All employees must be aware of the risks associated with the use of solid fuel appliances and the need for adequate ventilation.

Both wood fired catering and charcoal fired catering equipment are classed as Solid Fuel Appliances but due to their separate and distinct properties should be considered separately when designing a safe and effective ventilation

Extracted from BESA DW/172 Kitchen Ventilation Systems Document - Second Edition

USEFUL INFORMATION

system. There is a fundamental difference between wood and charcoal burning appliances as unlike wood, charcoal does not produce large amounts of creosote and tar.

In view of the possible emission of sparks, avoid locating solid fuel burning equipment within 900mm of a fryer. Some fryers may have side screens which reduce the risk, it is recommended that you consult with the fryer manufacturer for their advice.

WOOD BURNING

- When solid fuel in the form of wood and charcoal is burned, products of combustion including carbon monoxide gas are released.
- Carbon monoxide is a highly poisonous gas with no taste, smell or colour. Moderate exposure can lead to serious permanent ill health effects or death.
- Creosote is an oily liquid produced by the distillation of wood tar. In the ventilation system Creosote behaves like grease laden vapours and has a high flammability risk.
- Wood will continue to produce fumes until the fuel is completely extinguished.
- Only use wood burning appliances that are designed for indoor use. Wood burning appliances used at an outdoor event but located inside a tent, garage or gazebo can expose people to the risk of carbon monoxide poisoning.
- Sparks from the wood fire are the most common source of the heat and fire risk.

Ventilation Systems:

Wood burning cooking equipment shall not be connected directly to a naturally vented flue to atmosphere. The reason for this is that in a kitchen with a powered ventilation system under negative pressure, fumes and gases will be drawn back down the naturally vented flue serving the wood fired appliance and into the kitchen space. The result of a direct connection is that the kitchen staff may suffer from the harmful effects of toxic products of combustion.

The only time that a natural flue system can be permitted is if there is no other

form of mechanical extract ventilation in the kitchen in which the wood burning appliance is located.

Wood burning appliances shall be located beneath a stand-alone, suitably designed and equipped canopy and ventilation system. This will provide an air break between the appliance and the ventilation system unlike a directly connected flue, ensuring the proper balanced collection and removal of fumes. It will also dilute in-duct air temperature and reduce the risk of fire.

Extract Flow Rates:

Wood burning appliance coefficient and temperature schedules. Manufacturers of solid fuel catering equipment shall test and provide ventilation

requirements for new equipment. These tests should be to a recognised country standard where the equipment is used.

Exhaust System:

Exhaust ventilation systems serving wood burning cooking equipment shall be separate from all other exhaust systems. Wood burning appliances shall not be incorporated into the same exhaust system which serves gas and electrical equipment.

There are several reasons why the wood burning appliance and the exhaust ventilation system need to be separate:

- To prevent sparks from wood burning equipment entering duct systems serving other cooking equipment.
- There will be less build-up of grease and creosote in the system and no cumulative effect of contamination between the ventilation systems.
- Less risk of fire spreading through the duct system.
- Easier to clean and maintain.
- Ensure that the products of combustion can be safely removed.

Supply Air Ventilation:

When positioning the wood burning appliance, consideration must be given to the location of the fresh air entering into the room. Ensure that the supply inlet is positioned well away from any solid fuel extract ventilation outlet. Where mechanical input is selected, the system shall provide a minimum 75% and a maximum of 95% of the total extracted flow rate with the remainder infiltrating naturally into the kitchen from surrounding areas.

Addition of wood burning appliance to existing Exhaust Ventilation Systems:

Extracted from BESA DW/172 Kitchen Ventilation Systems Document - Second Edition

USEFUL INFORMATION

Exhaust ventilation systems serving wood burning cooking equipment shall be separate from all other exhaust systems When purchasing a wood burning appliance it is essential that the existing ventilation system is checked to ensure that it is a dedicated system and separate from all other extract ventilation systems. Any new equipment added to the kitchen must have a ventilation system in accordance with the latest DW/172 specification.

Spark Arrestor:

Sparks from the wood fire are the most common source of the heat and fire risk. Ventilation systems serving wood burning appliances shall be fitted with suitable spark arrestors. No spark arrestor can guarantee that sparks will not enter the extract ventilation system. Regular maintenance and cleaning is necessary to minimise the risk of fire within the system.

Types available and how they work:

- Mesh screens must be manufactured in stainless steel.
- Separators positioned within the ventilation canopy extracting air from wood burning appliances shall be provided with permanent spark arrestors on the rear face of each separator.
- Cold water mist will act as a spark arrestor.

Fans:

All fans shall have the motors out of the airstream and impellers shall have metal blades. The high temperatures commonly seen from wood burning appliances can reach 260/300 °C . This can lead to failure of the fan motor bearings and other components which cannot withstand the heat. By using a ventilation canopy to dilute the duct air temperatures these can reduce to between 90/120 °C. Using cold water mist canopies will provide further reduction in temperature.

Ductwork Materials and Construction:

Unless specified to the contrary, for wood burning appliances the complete duct system shall be manufactured from stainless steel, constructed to DW/144 specification. Ductwork must be site specific and have a minimum of 2 hour resistance unless otherwise specified and be tested and assessed to the latest version of BS476 part 24 or EN 1366-1. Surface temperatures can reach in excess of 250 °C. In these instances in accordance with Building Control the ductwork should be insulated to avoid heat transfer to adjacent combustible materials.

Fire Suppression:

Reference must be made to the Regulatory Reform (Fire Safety) Order 2005. Only fire suppression systems which have been tested and approved for use on wood burning equipment can be used. Almost every installation is different in terms of potential fire risk due to the type and positioning of equipment, therefore it is essential that a risk assessment is carried out by a qualified fire engineer to determine the most appropriate solution for fire suppression.

Controls:

The extract and supply ventilation systems shall continue to run until all burning wood has been extinguished, even if no person is on the premises. This will ensure that there is no risk to people in neighbouring property and that the building is safe for staff to enter for the next working shift. The mechanical kitchen ventilation system must be interlocked with the carbon monoxide and carbon dioxide detectors.

Monitoring:

Carbon monoxide gas can build up very quickly and occupants can be overcome by poisonous gases without warning. See Appendix G and H for carbon monoxide and carbon dioxide details.

Audible and visual carbon monoxide and carbon dioxide alarms shall be fitted to provide 24 hour protection and to warn staff of dangerous levels of poisonous gases. This is also very important in the case of fan failure or power cuts. Alarms must comply with BS EN 50291 and evacuation procedures must be in place in the event of alarm activation.

Carbon monoxide and carbon dioxide detectors must be installed and positioned in accordance with the manufacturer's instructions as laid down in IGEM/UP/19 See Figure 19 for typical locations.

The alarms shall be interlocked with the mechanical kitchen ventilation system to ensure that the system remains in operation until both sensors read acceptable safe levels of Carbon Monoxide and Carbon Dioxide.

Power Cuts:

In the event of a power cut, operation of wood burning appliances will continue to emit carbon monoxide gas and the risk to staff and others in the vicinity will be very high. Fuel will continue to burn but the mechanical ventilation system will be unable to remove the resultant poisonous fumes.

All staff and personnel must evacuate the kitchen in the event of a power cut. Once power has been reinstated, the kitchen ventilation

Extracted from BESA DW/172 Kitchen Ventilation Systems Document - Second Edition

USEFUL INFORMATION

system must run for 15 minutes before any staff can be allowed to re-enter the kitchen.

All employees must be made aware of the risks associated with the use of wood burning appliances and the need for adequate ventilation.

In-house risk assessments and safe working procedures must be in place in the event of power failure.

Cleaning and Maintenance:

Cleaning access doors and their locations shall be such that all internal surfaces of the ductwork system can be visually inspected and cleaned in accordance with BESA TR/19 and Fire Protection Association RC44. The system must be accessible for safe access for maintenance. The lack of cleaning and maintenance will significantly increase the risk of fire within the system which can quickly spread to other areas.14.23 General Note:

There are fundamental differences between the burning of wood as a fuel and the burning of charcoal. Charcoal is wood that has already been burned and the impurities of creosote and tar have subsequently been removed.

Charcoal burning catering appliances still demand special conditions and the different characteristics for ventilating charcoal versus wood are outlined below. In all other respects charcoal burning equipment should be treated the same as wood burning.

CHARCOAL BURNING

All previous clauses in this section must be followed with the exception of the following:

- Wood must not be used on charcoal burning appliances.
- Only fuel as recommended by the equipment manufacturers should be used.
- Products of combustion from the burning of charcoal are akin to those emitted from gas fired appliances. Therefore there is no requirement for stainless steel extract ductwork. Galvanised steel ductwork manufactured in accordance with DW/144 is acceptable.
- As there will be no creosote or tar deposited in the kitchen extract ductwork system there is no requirement for the charcoal fired appliances to be served by a separate canopy and extract system.
- This will also apply when a charcoal burning appliance is added to an existing exhaust ventilation system. Care must be taken however to ensure that the extract air flowrate is correctly calculated.
- Systems designed for charcoal burning appliances cannot be retrospectively used for wood burning cooking equipment.
- All other risks associated with issues such as Carbon Monoxide and Carbon Dioxide emissions, high temperatures, spark arrestors etc are the same as for wood burning appliances therefore clauses 1 to 23 must be taken into account.
- In view of the possible emission of sparks, avoid locating solid fuel burning equipment within 900mm of a fryer. Some fryers may have side screens which reduce the risk, it is recommended that you consult with the fryer manufacturer for their advice.

Flavouring / Smoker Units:

Where an enclosed appliance uses wood pellets, shavings or wood chips solely for flavouring and not as a means for cooking they need not be treated as a solid fuel appliance. However ventilation and Carbon Monoxide, Carbon Dioxide controls as detailed in this section are still required.

FANS & ACCESSORIES

GENERAL:

The main design considerations for kitchen extract fans are air-flow rate, resistance, noise level, size and cost. The three main fan types generally found within kitchen extract systems are axial, mixed flow and centrifugal as described below.

Fan Blade Types:

Axial

The most commonly found fan type in existing and especially older kitchen extract systems. This type of fan consists of a propeller mounted in a cylindrical housing. Axial fans are simple, cheap, easy to fit and come in a variety of formats such as plate mounted, duct mounted or circular flanged units with a straight through air flow pattern. They have an additional advantage over other fan types discussed here in that they can run in reverse to change the direction of flow, although only at approximately 60% volume.

The disadvantage with axial fans is that they are less efficient, especially where high system resistance is a factor, such as the resistance created by long or complex ductwork

Extracted from BESA DW/172 Kitchen Ventilation Systems Document - Second Edition

USEFUL INFORMATION

runs, canopy baffle separators, secondary filtration systems and odour control. Two-stage contra-rotating impellors configurations of axial fan can handle higher pressures. In practice however, this often means that a much larger axial fan is required in place of a more compact centrifugal or mixed flow unit. A larger axial fan will produce higher noise levels which can be a problem encountered in well ventilated kitchens. Axial fan blades have a tendency to load with grease/contaminants becoming unbalanced, which can in turn cause the fan vibrate, create noise and lead to long-term damage.

Mixed Flow

The mixed flow design impellor is halfway between an axial and centrifugal blade pattern. The air flows in an axial direction but is then deflected 45o by the impellor. The resultant centrifugal force allows the fan to handle higher resistance when compared to an axial fan.

Mixed flow fans are usually mounted in straight duct sections with straight through air flow although plate mounted versions are available, but less common. When compared to an axial fan, a mixed flow fan is generally more efficient and will cope with a higher level of resistance.

Mixed flow fans cannot be electrically reversed to change the direction of airflow although this is not usually a requirement of kitchen extract systems.

Centrifugal

A centrifugal fan, often known as a radial fan, is similar in shape to a drum, where the end of the drum is solid and the sides consist of blades. The air is drawn into the rotating drum and thrown out through the blades. There are different formats of centrifugal fan based on the type of blades fitted. The two types generally used are as described below;-

i. Forward curved. (Many tightly packed, small, forward curved blades.)

ii. Backward curved. (Fewer, larger backward curved blades.)

Forward curved centrifugal fans are cheaper and smaller than backward curved centrifugal fans, but are not as well suited for kitchen extract when compared to backward curved fans for the following reasons;-

- Not as efficient.
- Blades collect grease and are difficult to clean.
- Sharper performance curve.
- Minimum amount of system resistance required or unit will over speed /over heat.

Centrifugal fans can be mounted as straight through duct fans but are more efficient when used to turn the airflow through 90o. Plate mounted centrifugal fans are also available. Backward curved centrifugal fans are of similar efficiency to mixed flow fans but at a far higher resistance level. This makes them ideal kitchen canopy fans.

Centrifugal fans cannot be electrically reversed to change the direction of airflow although this is not usually a requirement of kitchen extract systems.

Summary

Although axial fans have been the most popular fan type for small to medium kitchen extract systems in the past, mixed flow and centrifugal are now more commonplace as they are better suited to cope with the higher resistance levels caused by baffle filters and secondary filtration such as carbon or UV.

FAN ENCLOSURES

Roof Fans:

Roof fans are designed to fit on to a timber or steelwork curb and either discharge vertically or downwards by means of a mushroom shaped cowl. No roof mounted ductwork is required so installation is straightforward. Ideally these fans should be mounted horizontally so if the roof is pitched the curb should be built up to provide a horizontal mount for the fan.

Vertical discharge fans are suitable for extract only but mushroom, side intake / discharge, cowls are often supplied with a fan that can be fitted either way to allow them to be installed for extract or supply use. Where supply and extract roof fans are located nearby, vertical discharge cowls should be used for extract and mushroom cowls for supply in order to reduce the risk of cross contamination.

'Acoustic' roof fans are available with integral attenuation material to reduce noise out-put.

Adaptable Box Fans:

Adaptable box fans typically consist of a centrifugal type fan mounted in a box shaped framework with removable panels. By re-arranging panels the fan can be used either as a straight through unit or alternatively to form a bend by turning the air through 90o. The performance of the fan is actually slightly better when used in the 90o arrangement due to the characteristics of the centrifugal impellor.

USEFUL INFORMATION

Many of these types of fan are available with an acoustic insulation lining within the double-skinned panelling which significantly helps the attenuation of break-out noise. Generally, these fans are the most useful for kitchen ventilation because of their positional adaptability, space saving attributes, high pressure capability against system resistance, reduced noise levels and efficiency. These fans are also available with motors out-of-airstream for extreme heat situations typically handling transported air temperatures of up to 1200C.

Plate Axial Fans:

Plate fans can be fitted to a wall opening and are useful for simple wall mounted extract canopies with rear or end extract. They are usually limited to axial type fans although small centrifugal plate fans are available. The fan can be fitted either way round for extract or supply but cross contamination will occur if supply and extract fans are too close to each other. This type of fan may be suitable for smaller systems with low volumes, low resistances and low contamination levels such as dish-wash extract or very low output 'bar meal' type catering.

Duct (cased axial) Fans:

Duct mounted fans consist of a unit mounted within a section of ductwork which is normally flanged at each end to allow connection into the run. The fan can be used either way round for supply or extract and can often be fitted with the motor out of the airstream. These motor out of airstream models are known as bifurcated fans because the air passage is split and transported around either side of the motor. Generally, these types of fan are lower cost than others, they tend to be inefficient, noisy and have truncated performance curves operating at lower levels of resistance.

Custom Housings & Air Handling Units:

Where the extract or supply volume is too high for 'off the shelf' fans, an air handling unit may be required, this can be custom built to accommodate a larger motor and impeller than is found in standard fan ranges and may well utilise a belt drive arrangement or a centrifugal plug fan to achieve the required increase in performance. If speed control is required this type of fan will usually require the use of an inverter.

Temperature Ratings & Insulation:

Where a fan is likely to be subject to high temperatures and high levels of grease, such as for ventilating flame grilling or solid fuel equipment and other high output appliances, the motor should be mounted out of the airstream. In cooking situations such as those typically encountered in schools or care homes where the equipment duty-cycle and temperatures are usually lower, a standard configuration motor may be used providing the motor is suitably insulated. Class F insulation is recommended for temperatures up to 155oC and should be considered in most cases or Class B for up to 130oC may be suitable for a wash up or other low risk areas. It should be noted that whilst fans fitted with motors out of the airstream are generally more expensive, they tend to require less maintenance and have a longer motor life – especially in kitchen extract.

MOTOR & DRIVE TYPES

Squirrel Cage (IE2) Motors:

Most fan motors are traditional 'squirrel cage' type, these are the most common type of commercial AC motor available and generally consist of a casing which houses all the motor components, which is sealed to prevent the ingress of dust and moisture. The casing is usually cast with external heat-dissipating fins along the length and in some cases a small fan blows air along the fins to further cool the motor. This type of motor can be used on either belt driven or direct drive fans.

External Rotor Motor:

The 'external rotor' works on the same principal as the traditional 'squirrel cage 'motor but the stator and the motor have swapped places, the rotor is on the outside and the stator on the inside. This means that the fan blades can be attached directly to the outside of the rotor and the whole motor is then an integral part of the fan. This more recent motor design has some distinct advantages, it is more compact than a traditional fan and motor combination and the motor is cooled by the transported air, making it more suitable for speed control. Due to the nature of its integral construction, this type of motor is only suitable for direct drive fans.

EC Motor:

EC stands for Electronically Commutated which means it is a fan with a brushless DC or permanent magnet motor. They are synchronous motors powered by DC electricity via an inverter or switching power supply which produces an AC electric current to drive each phase of the motor. More succinctly, these motors are more efficient than the others mentioned above and are becoming more widely available which in turn is helping to reduce prices. Because they operate using an in-built inverter, they are available with a 0 to 10v signal terminal and can be controlled by a simple & low-cost remote mounted potentiometer. These types of motor can offer

Extracted from BESA DW/172 Kitchen Ventilation Systems Document - Second Edition

USEFUL INFORMATION

significantly reduced running costs on kitchen applications where typically high yearly operational usage is prevalent.

Direct Drive Fans:

Direct drive is where the motor is connected directly to the fan, either by the drive shaft on a conventional motor or integrated in the case of an external rotor motor. This type of fan is more compact and usually cheaper than a belt driven fan and is well suited to most small to medium sized kitchen ventilation systems.

Belt Drive Fans:

Belt drive fans consist of a separate motor and fan unit connected to each other by a fan belt and pulleys. This allows for a more powerful motor to be connected to a fan with blades of a steeper pitch. The advantages of this type of drive are that more air can be moved at a lower and quieter motor speed, the belt absorbs vibration from the motor and reduces noise levels and the pulleys can be adjusted to change the fan speed. This type of fan is generally used on larger kitchen ventilation systems and is often utilised in air handling units.

FAN SPEED CONTROLLERS

Speed control is essential to allow accurate commissioning of the system and adjustment of fan speed as secondary filters become dirty. Where fitted, controls should be mounted either in a lockable, ventilated control cabinet or in a supervisor's office. Alteration of the fan settings by the kitchen staff should be avoided because this could imbalance the extract to supply air ratio, or if turned down too low could reduce the extract to a point where it is not ventilating the combustion fumes properly. Too little or too great an air movement for the canopy design will result in a serious decrease in grease filtration efficiency as filter size and quantity are determined by a single air movement duty at the optimum efficiency of the filter. For these reasons, once a system is set up and commissioned, it should not be altered outside of predetermined parameters. Please refer to Section 16 Kitchen Ventilation Control Panels.

Small to medium sized kitchen ventilation fans may be controlled by a simple on/ off switch, an electronic speed controller, a transformer or a frequency inverter. Larger fans usually require a frequency inverter.

On/Off Switch:

- The simplest method of fan control.
- Very easy to wire and cheap.
- No form of speed adjustment so system cannot be tuned when commissioning.
- No form of motor protection. (TP or TK).

Electronic Speed Controllers:

- The cheapest form of speed control.
- Easy to wire by a qualified electrician.
- Small and unobtrusive.
- Infinitely variable, step-less, speed control, although there is a minimum start speed. Control usually 60-100% of rated voltage.
- Tends to get hot and can produce an electrical humming noise.
- Can cause fan noise problems by creating harmonic vibration in the motor and should be avoided where noise is an issue.
- Life expectancy of motor bearings is reduced when operating at lower speeds.
- One controller should not be used for more than one fan unless the motor cases are shielded.
- An inefficient form of speed control.

Transformer Speed Controllers:

- Does not cause noise problems from the fan motor.
- Multiple fans can be connected to one transformer without special consideration.
- Motor protection available when one transformer used per fan.
- Easy to wire by a qualified electrician.
- More expensive than electronic controllers.
- Large and heavy compared with electronic controllers.
- Have steps, usually five, so not infinitely variable.
- Life expectancy of motor bearings is reduced when operating at lower speeds. (Usually speeds 1 and 2).
- Generally these controllers require good local ventilation to prevent overheating.

Frequency Inverter Speed Controllers:

- Controls speed by adjusting frequency.

Extracted from BESA DW/172 Kitchen Ventilation Systems Document - Second Edition

USEFUL INFORMATION

- Can cause noise problems from the fan, harmonics, this may be reduced by changing set-up on the inverter.
- Motor protection available.
- Infinitely variable speed control. (Usually digitally from 1 to 100 %.)
- Most expensive type of control compared to the others listed here.
- More difficult to wire by qualified electrician.
- Complex controls, should not be adjusted by un-trained personnel.
- Requires an un-switched electrical supply.
- Generally these controllers require good local ventilation to prevent overheating.
- IE2 motors of 0.75kW or more must have an inverter control to comply with 2017 ErP requirements.

WIRING:

It is essential to ensure that any electrical connection to a fan or fan controller is carried out by a qualified electrician who has experience of this type of installation. Incorrect wiring can easily destroy the fan, the controller or both at great expense. Where an axial fan will reverse the airflow if wired the wrong way round, a mixed flow or centrifugal will not, so there is no obvious indication that the wiring is incorrect without a visual check of impellor rotation.

Motor Protection: (TP or TK)

Without motor protection a fan motor will cut out when it overheats and automatically start again when it cools down. If motor protection (TP or TK) is utilised, then when the fan motor cuts out it sends a signal to the controller. The fan motor will not start again until it cools down and the controller is MANUALLY re-set. This is advantageous as it indicates to the operator that there is a problem with the motor overheating whereas without TP or TK protection the fan could be tripping out and re-starting for some time without the operator being aware, possibly leading to failure of the fan. Typically, not utilising the overload protection, invalidates fan warranties.

NOISE ATTENUATION

Attenuation in the form of conventional silencers is often used to reduce low to mid frequency noise created by ventilation fans. These silencers usually consist of a rectangular or circular length of flanged duct which is fitted with internal baffles. The duct and baffles are fitted with a perforated metal liner, the area between the liner and the outer skin is filled with a sound absorbing material such as inorganic glass fibre or mineral wool. Due to their construction the use of silencers should be avoided, when possible, on kitchen extract ducts. The sound absorbing material is also an excellent grease absorbing material, causing a fire and health hazard as the lining becomes saturated. Furthermore, the effectiveness of the material to absorb sound is reduced as it becomes saturated, to the point where it no longer effectively reduces noise. It is therefore necessary where possible, to ensure that the fan selection meets the specified noise criteria without the use of silencers.

Where in-line attenuators are used for kitchen extract, they shall be constructed so that there is no grease impregnation into the acoustic media. A protective membrane shall be specified for this purpose, this will reduce the design performance of the attenuator. This should be taken into account when selection is made.

A further point to be aware of when considering duct silencers is that they restrict the airflow thereby increasing duct pressure. This may require a larger and possibly noisier fan to be selected.

FAN MOUNTING

To minimise the likelihood of vibration and noise transference through the building structure, fans shall be mounted or suspended using suitable rubberised or springloaded anti-vibration mounts. Curb-mounted roof fans should sit upon closed cell neoprene strip measuring 50 x 10 mm in section, fitted to the full perimeter of the curb upstand.

To minimise the likelihood of vibration and noise transference through adjoining ductwork, in-line fans should have suitable flexible connections on both intake & discharge sides between fan and duct connection. Flexible connection materials should be selected to suit the air contaminants and air temperatures being transported. In extract systems, flexible connections should be suitable for use in a grease laden atmosphere and positively fixed by clamps or bonding to prevent leakage. Under fire conditions, the material must have a minimum integrity of at least 15 minutes and selected to suit the temperature of the fumes being exhausted.

Extracted from BESA DW/172 Kitchen Ventilation Systems Document - Second Edition

USEFUL INFORMATION

APPLICATION GUIDE

Applications	Products								
	JM/JMv Aerofoil	MaXfan²	MaXfan Compac	JM Aerofoil Bifurcated	Bifurcated Series 33	Plate Fans	Tube Fans	Daisho AC	Sabina EC
Kitchen canopy extract	•	•		•	•	•	•		
Kitchen supply	•	•				•	•		•
Restaurants/fast food restaurants	•	•	•	•	•	•	•	•	•
Pubs/hotels	•	•	•	•	•	•	•	•	•
Catering	•	•		•	•	•	•		
Flue dilution	•	•		•	•				
Fire safety & life systems	•		•						
Education: schools/universities	•	•	•	•	•	•	•	•	•
Healthcare	•	•	•	•	•	•	•	•	•
Industrial	•	•	•	•	•	•			
Leisure: Venues/stadiums	•	•	•	•	•	•	•	•	•
Offices	•	•	•	•	•	•	•	•	•
Retail: malls/supermarkets	•	•	•	•	•	•	•	•	•
Residential: hotels/apartments	•	•	•	•	•	•	•	•	•
Internal mounting	•	•	•	•	•	•	•	•	•
External mounting	•	•	•	•	•	•			•
Low profile (ceiling void)	•	•	•	•	•	•	•	•	•
Stairwell pressurisation	•		•			•			
Smoke extract (incl loading bays)	•		•						
General extract	•	•	•	•	•	•		•	•
Toilet extract	•						•	•	•
Demand control ventilation	•	•	•	•	•	•	•	•	•

USEFUL INFORMATION

Products												
Katana EC	Daisho EC	Estoc/ PowerBox	PowerBox GF/Estoc Targe	PowerBox/ Estoc EC	Roof Units	GLEB	eCO Premium	Fire Dampers	Dampers	Fire Valves	Valves	Louvres/ Cowls
•		•	•	•	•	•		•	•	•	•	•
•		•		•		•			•	•	•	•
•	•	•	•	•	•	•	•	•	•	•	•	•
•	•	•	•	•	•	•		•	•	•	•	•
•		•	•	•	•	•		•	•	•	•	•
						•						
								•		•		
•	•	•	•	•	•	•	•	•	•	•	•	•
•	•	•	•	•	•	•		•	•	•	•	•
					•	•		•	•	•	•	•
•	•	•	•	•	•	•		•	•	•	•	•
•	•	•	•	•	•	•		•	•	•	•	•
•	•	•	•	•	•	•		•	•	•	•	•
	•	•	•	•	•			•	•	•	•	•
•	•	•	•	•	•	•	•	•	•	•	•	•
	•	•	•	•	•	•	•	•	•			•
•	•						•	•	•	•	•	•
						•			•	•		•
•	•	•	•	•	•	•		•	•	•	•	•
•	•	•		•	•			•	•	•	•	
•	•	•	•	•	•	•		•	•	•	•	•

USEFUL INFORMATION

INSTALLATION ADVICE - HORIZONTAL MOUNTING

Fig. 1H. A fan at entry should be connected to the ducting with a flexible connector and vibration isolators should be used.

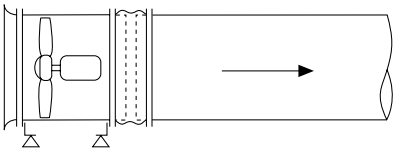

Fig. 2H. A fan within ducting should be connected by flexible connectors at each end mounted on vibration isolators.

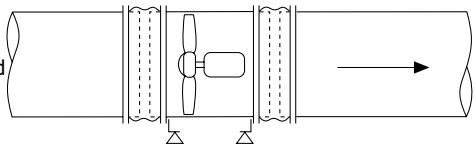

Fig. 3H. For a two-stage fan it is usually necessary to fit vibration isolators at the middle joint as well as at each end. Here 4 sets are shown as smaller fans only 3 sets may be necessary.

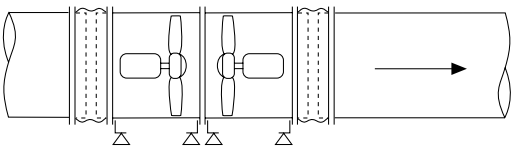

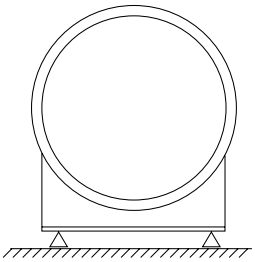

Vibration Isolators

To avoid mechanically transmitted sound and vibration problems fans are normally installed on vibration isolators.

Fig. 4H. The arrangement of flexible connectors and vibration isolators for a single stage fan with one cylindrical silencer.
Note: 'B' type silencers must be bolted directly to the fans.

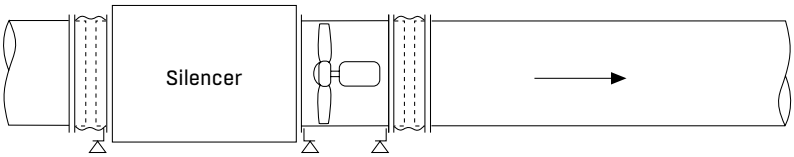

Fig. 5H. The vibration isolator arrangements for a single stage fan with a silencer each end.

Silencer (B Type only)

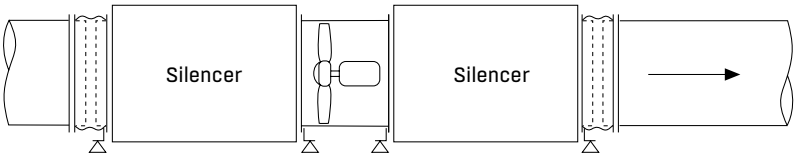

Fig. 6H. The vibration isolator arrangement for a two stage fan with a silencer at each end.

Silencer (B Type only)

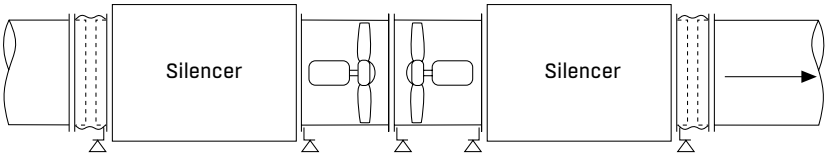

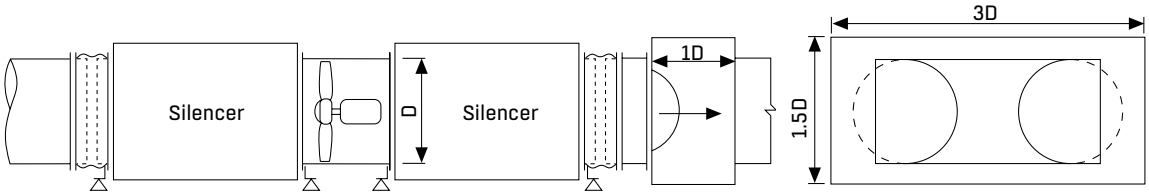

Fig. 7H. Fans in parallel should blow into a common plenum chamber. The minimum dimensions of the plenum chamber in relation to the fan dia should be as above.

Silencer (B Type only)

USEFUL INFORMATION

INSTALLATION ADVICE - VERTICAL MOUNTING

Make sure the support does not restrict access for removal.

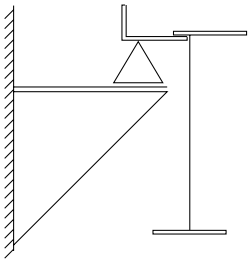

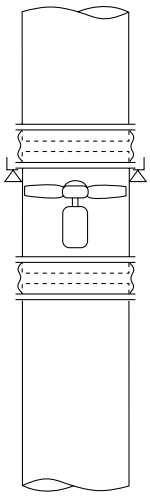

Fig. 1V. Support a single stage fan by mounting feet or plates fixed to the upper flange.

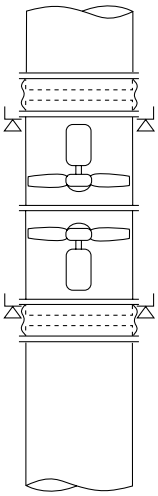

Fig. 2V. For a two stage fan support at the upper and lower flanges.

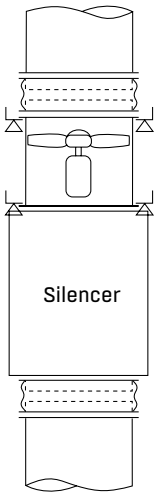

Fig. 3V. For a single stage fan with silencer below, support at the top of the fan and top of the silencer.

Fig. 4V. The support arrangement for a two stage fan with a silencer below.

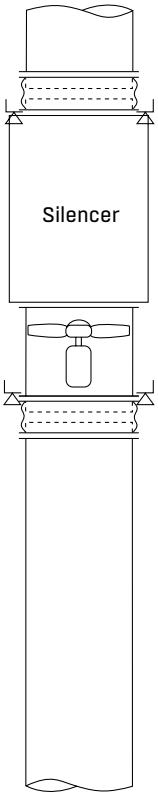

Fig. 5V. The supports for a single stage fan with a silencer above.

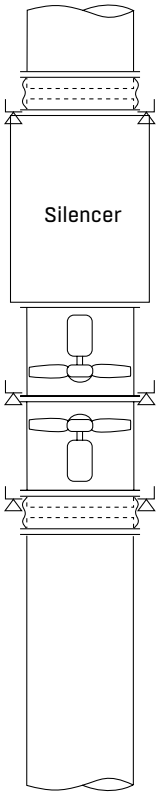

Fig. 6V. Supports for a two stage fan with a silencer above.

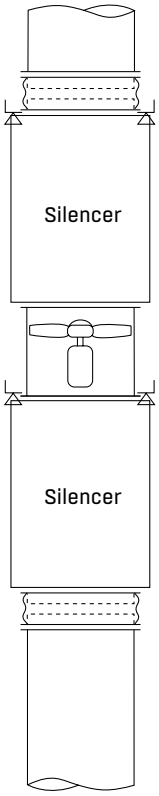

Fig. 7V. Supports for a single stage fan with a silencer above and below.

Silencer (B Type only)

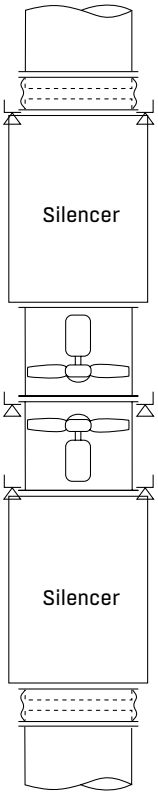

Fig. 8V. Supports for a two stage fan with a silencer above and below.

Silencer (B Type only)

USEFUL INFORMATION

INSTALLATION ADVICE - BENDS, EXPANDERS AND CONTRACTORS (TRANSFORMATION PIECES)

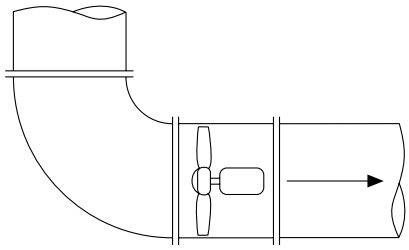

WRONG
Fan performance suffers and noise is increased if a 90° circular section bend of small radius is used.
(starves half the impeller)

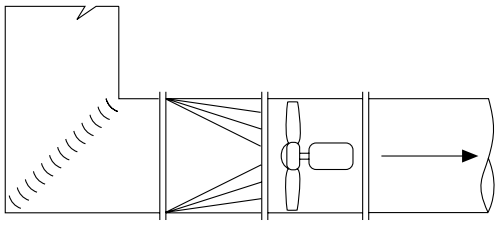

RECOMMENDED
Use a square bend with short chord turning vanes. This is also preferable when air flow is in the opposite direction.

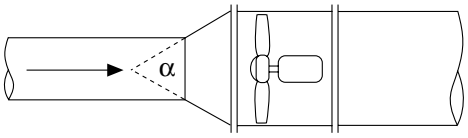

WRONG
Do not use an expander of more than 15° immediately before or after the fan. (This starves the blades)

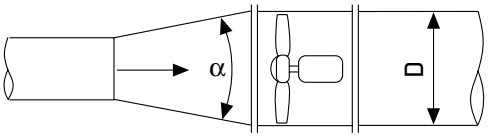

RECOMMENDED
Ideally an expander immediately before a fan should not be more than 15°.

Flexible connections

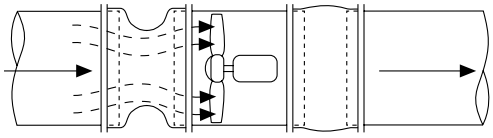

WRONG
Flexible connectors should not be slack, as this will cause "necking", which will starve the impeller blade tips of air, reduce fan performance and increase noise.
(starves the blades)

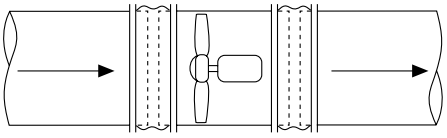

RECOMMENDED
Flexible connectors should be just long enough for mechanical isolation and should be taut.

USEFUL INFORMATION

INSTALLATION ADVICE - INLET AND OUTLETS

Make sure the support does not restrict access for removal.

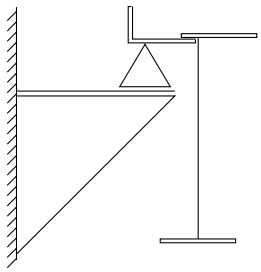

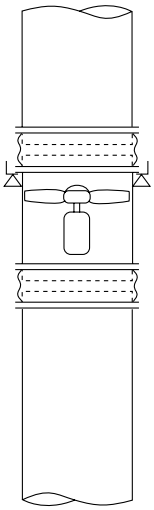

Fig. 1V. Support a single stage fan by mounting feet or plates fixed to the upper flange.

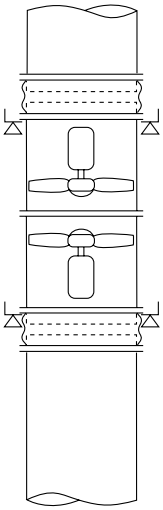

Fig. 2V. For a two stage fan support at the upper and lower flanges.

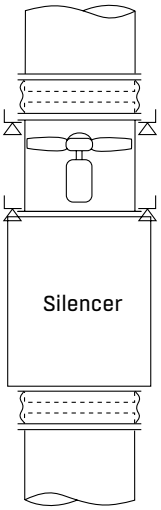

Fig. 3V. For a single stage fan with silencer below, support at the top of the fan and top of the silencer.

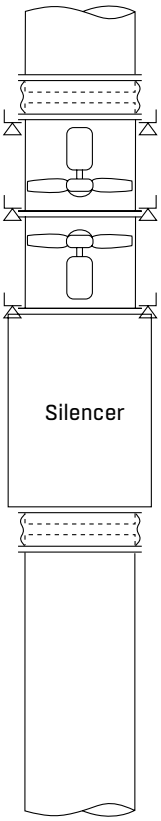

Fig. 4V. The support arrangement for a two stage fan with a silencer below.

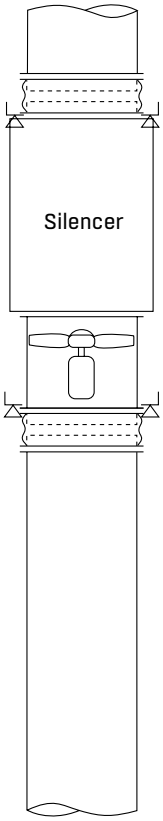

Fig. 5V. The supports for a single stage fan with a silencer above.

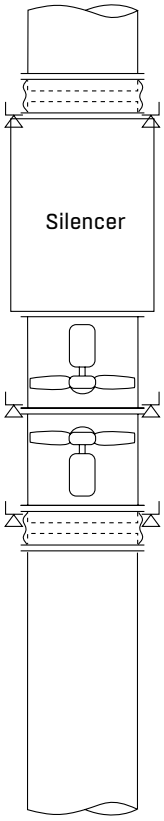

Fig. 6V. Supports for a two stage fan with a silencer above.

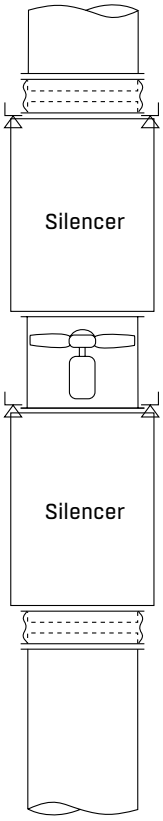

Fig. 7V. Supports for a single stage fan with a silencer above and below.

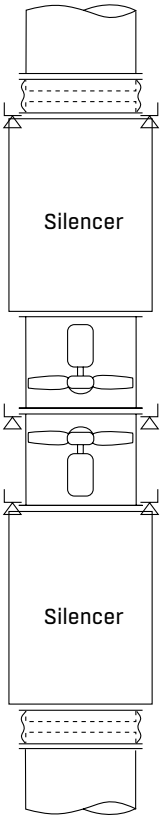

Fig. 8V. Supports for a two stage fan with a silencer above and below.

USEFUL INFORMATION

AIR CHANGES PER HOUR

Although no hard and fast rules can be laid down for rates of air changes, the recommendations in the table below may be taken as a general guide.

Situation	Air Changes per hour
Assembly Halls	4 - 6
Bakeries	15 - 30
Banks	2 - 4
Bathrooms	6 - 8
Bars	6 - 8
Boiler Houses	15 - 30
Cafés	8 - 12
Canteens	8 - 12
Churches	1 - 10†
Cinemas*	6 - 10
Classrooms	2 - 4
Cleaners	15 - 30
Dance Halls	8 - 12
Domestic Kitchens	10 - 15
Dyers	15 - 30
Engine Rooms	15 - 30
Foundries	30 - 60
Furnace Rooms	30 - 60
Garages	6 - 10
Hospital Wards	6 - 8
Hospital Treatment Rooms	6 - 8
Kitchens for Restaurants	13 - 30
Laboratories	4 - 6
Laundries	10 - 15
Libraries	2 - 4
Offices	4 - 6
Paint Shops	30 - 60
Residences	1 - 2
Restaurants*	10 - 15
Storage Areas	1 - 2
Swimming Baths	15 - 30
Theatres*	6 - 10
Workshops	6 - 10

* General requirements are 28m³/h per person minimum in public places; more if smoking is allowed.

† Dependent on height of building and number of persons.

in	x	25.4	=	mm
ft	x	0.3048	=	m
ft³	x	0.028	=	m³
lb	x	0.454	=	kg
BTU	x	1054.8	=	J
HP	x	0.746	=	kW
k cal/h	x	0.00116	=	kW
Ton Refrigeration	x	3.52	=	kW
BTU/ft²h°F	x	5.678 or	= =	J/m²s°C W/m2°C
ft³/min	x	0.000472	=	m³/s
in. wg	x	249.1	=	Pa

FUME REMOVAL

Recommended minimum velocities across face of extract hood:

Sandblast Booths	2.5m/s openings
Sandblast Booths	0.4m/s downwards through booth
Electro-Plating	0.75-1.0m/s openings
Electric Welding	0.5-1.0m/s
Paint Spray Booths	0.75m/s in breathing zone
Kitchen Equipment	0.5-0.75m/s

USEFUL INFORMATION

CONVERSION

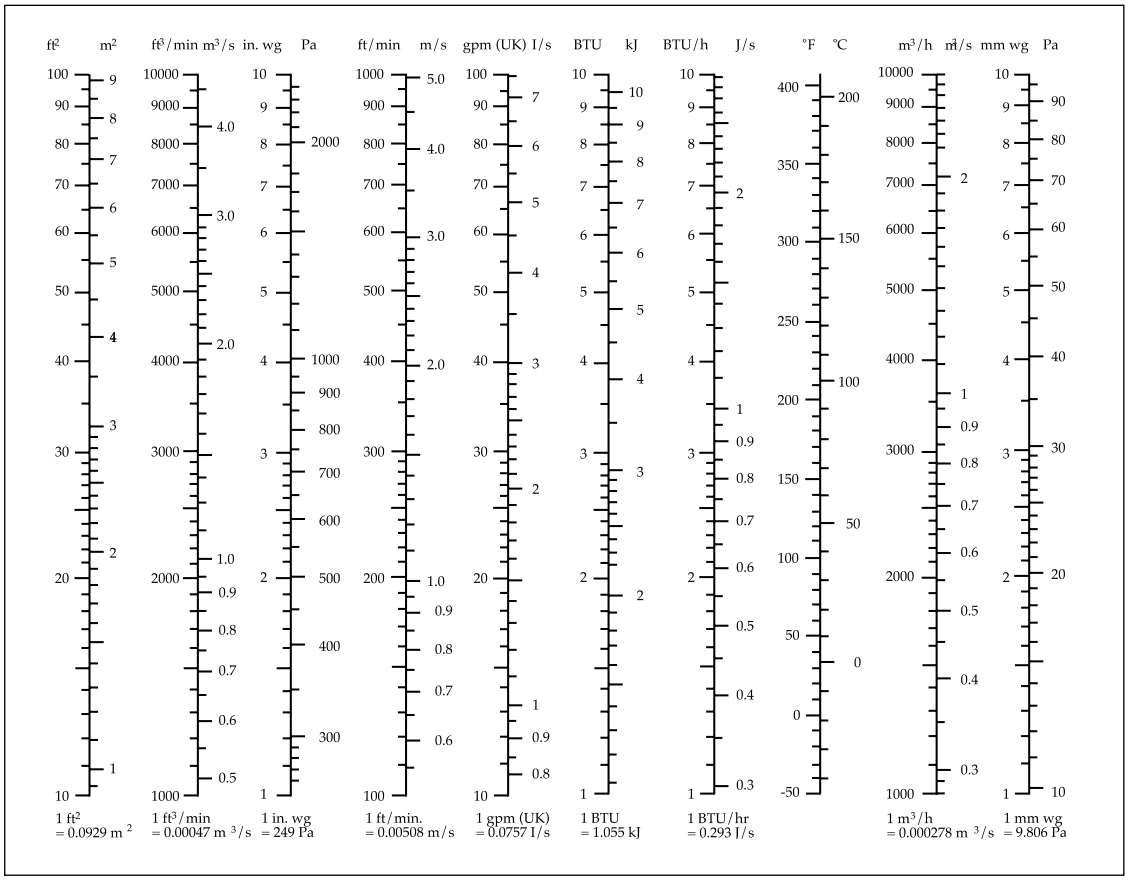

AIRTREND Ltd.
Predstavništvo u Beogradu
Kumanovska 14, 11000 Beograd
Tel: 011/3836886, 3085740
Faks: 011/3444113
e-mail: gobrid@eunet.rs
web: www.airtrend.rs